NEW JERSEY STATE LIBRARY
3 3009 00509 8316

New Jersey
Department of Environmental Protection
DIVISION OF WATER RESOURCES

Prevention and Removal of Chlorination By-Products from Drinking Water

November 1988

DEPOSITORY COPY
Do Not Remove From Library

Camp Dresser & McKee Inc.
EDISON, NEW JERSEY

974.90
W329
1988n
v.1
c.1

NEW JERSEY STATE LIBRARY

DEPOSITORY COPY
Do Not Remove From Library

CDM

environmental engineers, scientists, planners, & management consultants

CAMP DRESSER & McKEE INC.

Raritan Plaza I
Raritan Center
Edison, New Jersey 08818
201 225-7000

September 25, 1989

Mr. Steve Nieswand
New Jersey Department of Environmental Protection
Division of Water Resources
401 East State Street
Trenton, New Jersey 08625

Subject: Prevention and Removal of Chlorination By-Products
Final Report

Dear Mr. Nieswand:

We are pleased to submit the attached ten copies of the final report for the above referenced project. Comments from the Bureau of Safe Drinking Water have been incorporated into this report. Requirements of the amendment to Contract S85117 between Camp Dresser & McKee Inc. and the New Jersey Department of Environmental Protection dated February 26, 1987 are fulfilled by this report. The work was conducted under my direction by Bruce R. Roberts, Project Engineer and David A. Marabello, Assistant Project Engineer.

The issues of drinking water disinfection and disinfection by-products remain vital. Along with technological advances in chemical analytical techniques and toxicological study methodologies comes an evolution in drinking water contaminant regulations. In response to evolving regulations, the practice of drinking water treatment must also evolve. We believe that this report will aptly serve both the regulators and purveyors of drinking water in the search for safer techniques for disinfection of drinking water.

We have enjoyed working with your very competent staff, particularly Mr. Paul Schorr who provided invaluable input. With their help, this gathering of facts and experience will be valuable not only to the state of New Jersey, but to others throughout the nation who are facing similar decisions.

Thank you again for this opportunity to serve you in this way.

Very truly yours,

CAMP DRESSER & McKEE INC.

Steven Medlar

Steven J. Medlar, P.E.
Senior Vice President/Project Director

SJM/fl
Attachments

(FL33/47)

Table of Contents

CONTENTS

LETTER OF TRANSMITTAL

CONTENTS

LIST OF FIGURES

LIST OF TABLES

Section		Page
1.0	INTRODUCTION	1-1
1.1	Chlorination By-product Formation	1-1
1.2	New Jersey's Response	1-1
1.3	Establishing a Regulatory Framework	1-3
1.4	The Objective of this Study	1-4
1.5	Formation of THMs	1-4
2.0	OCCURRENCE OF TRIHALOMETHANES IN NEW JERSEY DRINKING WATER	2-1
2.1	NJDEP THM Compliance Database	2-1
2.2	THM Survey Questionnaire	2-9
2.2.1	General Observations on the THM Survey Responses and Database	2-12
2.2.2	Purveyors Plans for THM Control	2-14
2.3	THM Production at Five Water Treatment Plants	2-15
2.4	Analysis of the Special Water Treatment Study - Phase I Water Quality Database	2-19
2.5	Summary	2-20
3.0	ALTERNATIVES TO CHLORINATION	3-1
3.1	Ozone	3-1
3.1.1	Chemical and Physical Properties	3-1
3.1.2	Practical Considerations	3-3
3.1.3	Historical Use	3-7
3.1.4	Application to Reduction of THMs	3-8

CONTENTS
(continued)

Section		Page
3.2	Chlorine Dioxide	3-10
3.2.1	Chemical and Physical Properties	3-10
3.2.2	Practical Considerations	3-12
3.2.3	Historical Use	3-14
3.2.4	Application to Reduction of THMs	3-14
3.3	Chloramines	3-16
3.3.1	Chemical and Physical Properties	3-16
3.3.2	Practical Considerations	3-18
3.3.3	Historical Use	3-18
3.3.4	Application to Reduction of THMs	3-20
3.4	Potassium Permanganate	3-21
3.4.1	Chemical and Physical Properties	3-21
3.4.2	Practical Considerations	3-22
3.4.3	Application to Reduction of THMs	3-23
3.5	Experience at Water Treatment Plants Using Alternatives to Chlorination	3-24
3.5.1	Hackensack Water Company	3-24
3.5.2	Scituate, Massachusetts	3-26
3.5.3	Los Angeles, California	3-29
3.5.4	Worcester, Massachusetts	3-29
3.6	New Disinfection Regulations	3-30
4.0	HEALTH EFFECTS OF DISINFECTANTS AND DISINFECTANT BY-PRODUCTS	4-1
4.1	By-products and Health Effects	4-1
4.2	Chlorination	4-7
4.3	Chloramination	4-10
4.4	Ozonation	4-11
4.5	Chlorine Dioxide Treatment	4-13
4.6	Potassium Permanganate	4-15
4.7	Summary	4-16

CONTENTS
(continued)

Section			Page
5.0	THM TREATMENT TECHNOLOGIES AND PRECURSOR REMOVAL		5-1
	5.1 Coagulation		5-1
	5.2 Modification of Existing Chlorination Practices		5-2
	5.3 pH Adjustment		5-3
	5.4 Activated Carbon Adsorption		5-4
	5.5 Reverse Osmosis		5-7
	5.6 Air Stripping		5-9
6.0	TREATMENT PROCESSES AND COSTS FOR THM CONTROL		6-1
	6.1 Common Goals and Assumptions for Treatment Arrangements .		6-1
	6.2 Treatment Processes Employed		6-2
		6.2.1 Ozone Disinfection/Oxidation	6-3
		6.2.2 Chlorine Dioxide Disinfection/Oxidation	6-4
		6.2.3 Chloramine Postdisinfection	6-4
		6.2.4 Granular Activated Carbon Adsorption	6-4
		6.2.5 Granular Activated Carbon Filtration/Adsorption ..	6-5
	6.3 Description of Treatment Arrangements for THM Control ...		6-5
		6.3.1 Conventional Treatment with Ozone Disinfection ...	6-5
		6.3.2 Conventional Treatment with Chlorine Dioxide Disinfection	6-7
		6.3.3 Conventional Treatment with Ozone Disinfection and GAC Adsorption	6-7
		6.3.4 Conventional Treatment with Chlorine Dioxide Disinfection and GAC Adsorption	6-11
		6.3.5 Conventional Treatment with Ozone Disinfection, GAC Filtration/Adsorption and Optional Chlorine Dioxide Predisinfection	6-13
	6.4 Basis for Cost Estimates		6-15
		6.4.1 Cost Escalation Factors	6-16
		6.4.2 Amortization of Capital Costs	6-16
		6.4.3 Equipment Assumptions	6-17

CONTENTS
(continued)

Section		Page
6.5	Treatment Process Capital Costs	6-17
6.5.1	Ozone Disinfection/Oxidation	6-17
6.5.2	Chlorine Dioxide Disinfection/Oxidation	6-18
6.5.3	Chloramine Postdisinfection	6-20
6.5.4	Granular Activated Carbon Adsorption and Filtration/Adsorption	6-20
6.6	Operating Costs	6-23
6.6.1	Ozone Disinfection/Oxidation	6-27
6.6.2	Chlorine Dioxide Disinfection/Oxidation	6-27
6.6.3	Chloramine Postdisinfection	6-30
6.6.4	Granular Activated Carbon Adsorption and Filtration/Adsorption	6-30
6.7	Treatment Arrangement Cost Comparisons	6-34
6.8	Assessment of Results	6-34
7.0	SUMMARY AND CONCLUSIONS	7-1
7.1	Lower Standards Contemplated for Disinfection By-products	7-1
7.2	Feasibility of Meeting Stricter Standards	7-2
7.3	Implications for Purveyors	7-3
7.4	Health Risks of Disinfection By-products	7-6
7.5	Recommendations for Future Work	7-7
APPENDIX A	GLOSSARY OF SIGNIFICANT TECHNICAL TERMS	
APPENDIX B	BIBLIOGRAPHY	
APPENDIX C	NJDEP THM COMPLIANCE DATABASE, RAW DATA, MOST RECENT FOUR QUARTER TTHM AVERAGE	
APPENDIX D	THM SURVEY - BLANK QUESTIONNAIRE	
APPENDIX E	THM ANALYSIS AT FIVE WATER TREATMENT PLANTS - SCHEMATIC FLOW DIAGRAMS AND DATA TABLES	
APPENDIX F	A-280 - NEW JERSEY SAFE DRINKING WATER ACT AMENDMENTS	

LIST OF FIGURES

Figure		Page
1-1	Structural Formulas and Names of the Regulated Trihalomethanes	1-2
2-1	NJDEP THM Concentration Groupings	2-3
3-1	Typical Ozone Generator	3-4
3-2	Typical Ozone Contactor	3-5
3-3	Typical Process Schematic for Chlorine Dioxide Solution Generation	3-13
3-4	Hackensack Water Company Haworth Plant Process Schematic	3-25
6-1	Conventional Treatment Process Flow Schematic with Ozone Disinfection	6-6
6-2	Conventional Treatment Process Flow Schematic with Chlorine Dioxide Disinfection	6-8
6-3	Conventional Treatment Process Flow Schematic with Ozone Disinfection and GAC Adsorption	6-9
6-4	Conventional Treatment Process Flow Schematic with Chlorine Dioxide Disinfection and GAC Adsorption	6-12
6-5	Conventional Treatment Process Flow Schematic with GAC Filtration /Adsorption and Optional Chlorine Dioxide Predisinfection	6-14

LIST OF TABLES

Table		Page
2-1	NJDEP THM Compliance Database, Purveyors Ranked by Most Recent Four Quarter Average of Total THM Concentrations	2-4
2-2	THM Survey Database, Maximum Quarterly Average Results Total THM and Chloroform	2-11
3-1	Proposed CT Values for Achieving 90 Percent Inactivation of Giardia Lamblia	3-31
4-1	Health Effects Identified with Drinking Water Disinfectants or their By-products	4-5
6-1	Capital Costs for Ozone Facilities	6-19
6-2	Capital Costs for Chlorine Dioxide Facilities	6-21
6-3	Capital Costs for Chloramine Facilities	6-22
6-4	Capital Costs for GAC Adsorber Facilities	6-24
6-5	Capital Costs for GAC Filter/Adsorber Facilities	6-25
6-6	Raw Chemical Cost and Chemical Generation Cost Assumptions	6-26
6-7	Annual Operating Costs for Ozone Facilities	6-28
6-8	Annual Operating Costs for Chlorine Dioxide Facilities	6-29
6-9	Annual Operating Costs for Chloramine Facilities	6-31
6-10	Annual Operating Costs for GAC Adsorption Facilities	6-32
6-11	Annual Operating Costs for GAC Filtration/Adsorption	6-33
6-12	Conversion Cost Estimates for Five Treatment Arrangements at a 1 MGD Facility	6-35
6-13	Conversion Cost Estimates for Five Treatment Arrangements at a 10 MGD Facility	6-36
6-14	Conversion Cost Estimates for Five Treatment Arrangements at a 50 MGD Facility	6-37
6-15	Combined Amortized Capital and Annual Operating Cost Estimations for Five Treatment Arrangements at Three Plant Capacities	6-38

Section 1

LIST OF TABLES

Table		Page
2-1	NIDRD THM Compliance Database, Purveyors Ranked by Most Recent Four Quarter Average of Total THM Concentrations	2-4
2-2	THM Survey Database, Maximum Quarterly Average Results for THM and Chloroform	2-21
3-1	Proposed CT Values for Achieving 90 Percent Inactivation of Giardia Lamblia	3-31
4-1	Health Effects Associated with Drinking Water Disinfectants or their By-products	4-2
6-1	Capital Costs for Ozone Facilities	6-27
6-2	Capital Costs for Chlorine Dioxide Facilities	6-28
6-3	Capital Costs for Ozone Facilities	6-29
6-4	Capital Costs for Granular Carbon Adsorber Facilities	6-30
6-5	Capital Costs for Granular Activated Carbon Adsorber Facilities	6-31
6-6	Capital Costs for Powdered Activated Carbon Contactors	6-32
6-7	Capital Costs for Ozone Facilities	6-33
6-8	Capital Costs for Chlorine Dioxide Facilities	6-34
6-9	Capital Costs for Ozone Facilities	6-35
6-10	Capital Costs for Granular Carbon Adsorber Facilities	6-36
6-11	Capital Costs for Granular Activated Carbon Adsorber Facilities	6-37
6-12	Capital Costs for Powdered Activated Carbon Contactors	6-38
6-13	Capital Costs for Ozone Facilities	6-39
6-14	Capital Costs for Chlorine Dioxide Facilities	6-40
6-15	Capital Costs for Ozone Facilities	6-41
6-16	Capital Costs for Granular Carbon Adsorber Facilities	6-42
6-17	Capital Costs for Granular Activated Carbon Adsorber Facilities	6-43
6-18	Capital Costs for Powdered Activated Carbon Contactors	6-44
6-19	Capital Costs for Ozone Facilities	6-45
6-20	Capital Costs for Chlorine Dioxide Facilities	6-46
6-21	Capital Costs for Ozone Facilities	6-47
6-22	Capital Costs for Granular Carbon Adsorber Facilities	6-48
6-23	Capital Costs for Granular Activated Carbon Adsorber Facilities	6-49
6-24	Capital Costs for Powdered Activated Carbon Contactors	6-50
6-25	Capital Costs for Ozone Facilities	6-51
6-26	Capital Costs for Chlorine Dioxide Facilities	6-52
6-27	Capital Costs for Ozone Facilities	6-53
6-28	Capital Costs for Granular Carbon Adsorber Facilities	6-54
6-29	Capital Costs for Granular Activated Carbon Adsorber Facilities	6-55
6-30	Capital Costs for Powdered Activated Carbon Contactors	6-56
6-31	Capital Costs for Ozone Facilities	6-57
6-32	Capital Costs for Chlorine Dioxide Facilities	6-58
6-33	Capital Costs for Ozone Facilities	6-59
6-34	Capital Costs for Granular Carbon Adsorber Facilities	6-60
6-35	Capital Costs for Granular Activated Carbon Adsorber Facilities	6-61
6-36	Capital Costs for Powdered Activated Carbon Contactors	6-62
6-37	Capital Costs for Ozone Facilities	6-63
6-38	Capital Costs for Chlorine Dioxide Facilities	6-64
6-39	Capital Costs for Ozone Facilities	6-65
6-40	Capital Costs for Granular Carbon Adsorber Facilities	6-66
6-41	Capital Costs for Granular Activated Carbon Adsorber Facilities	6-67
6-42	Capital Costs for Powdered Activated Carbon Contactors	6-68
6-43	Capital Costs for Ozone Facilities	6-69
6-44	Capital Costs for Chlorine Dioxide Facilities	6-70
6-45	Capital Costs for Ozone Facilities	6-71
6-46	Capital Costs for Granular Carbon Adsorber Facilities	6-72
6-47	Capital Costs for Granular Activated Carbon Adsorber Facilities	6-73
6-48	Capital Costs for Powdered Activated Carbon Contactors	6-74
6-49	Capital Costs for Ozone Facilities	6-75
6-50	Capital Costs for Chlorine Dioxide Facilities	6-76
6-51	Capital Costs for Ozone Facilities	6-77
6-52	Capital Costs for Granular Carbon Adsorber Facilities	6-78
6-53	Capital Costs for Granular Activated Carbon Adsorber Facilities	6-79
6-54	Capital Costs for Powdered Activated Carbon Contactors	6-80
6-55	Capital Costs for Ozone Facilities	6-81
6-56	Capital Costs for Chlorine Dioxide Facilities	6-82
6-57	Capital Costs for Ozone Facilities	6-83
6-58	Capital Costs for Granular Carbon Adsorber Facilities	6-84
6-59	Capital Costs for Granular Activated Carbon Adsorber Facilities	6-85
6-60	Capital Costs for Powdered Activated Carbon Contactors	6-86
6-61	Capital Costs for Ozone Facilities	6-87
6-62	Capital Costs for Chlorine Dioxide Facilities	6-88
6-63	Capital Costs for Ozone Facilities	6-89
6-64	Capital Costs for Granular Carbon Adsorber Facilities	6-90
6-65	Capital Costs for Granular Activated Carbon Adsorber Facilities	6-91
6-66	Capital Costs for Powdered Activated Carbon Contactors	6-92
6-67	Capital Costs for Ozone Facilities	6-93
6-68	Capital Costs for Chlorine Dioxide Facilities	6-94
6-69	Capital Costs for Ozone Facilities	6-95
6-70	Capital Costs for Granular Carbon Adsorber Facilities	6-96
6-71	Capital Costs for Granular Activated Carbon Adsorber Facilities	6-97
6-72	Capital Costs for Powdered Activated Carbon Contactors	6-98
6-73	Capital Costs for Ozone Facilities	6-99
6-74	Capital Costs for Chlorine Dioxide Facilities	6-100
6-75	Capital Costs for Ozone Facilities	6-101
6-76	Capital Costs for Granular Carbon Adsorber Facilities	6-102
6-77	Capital Costs for Granular Activated Carbon Adsorber Facilities	6-103
6-78	Capital Costs for Powdered Activated Carbon Contactors	6-104
6-79	Capital Costs for Ozone Facilities	6-105
6-80	Capital Costs for Chlorine Dioxide Facilities	6-106
6-81	Capital Costs for Ozone Facilities	6-107
6-82	Capital Costs for Granular Carbon Adsorber Facilities	6-108
6-83	Capital Costs for Granular Activated Carbon Adsorber Facilities	6-109
6-84	Capital Costs for Powdered Activated Carbon Contactors	6-110
6-85	Capital Costs for Ozone Facilities	6-111
6-86	Capital Costs for Chlorine Dioxide Facilities	6-112
6-87	Capital Costs for Ozone Facilities	6-113
6-88	Capital Costs for Granular Carbon Adsorber Facilities	6-114
6-89	Capital Costs for Granular Activated Carbon Adsorber Facilities	6-115
6-90	Capital Costs for Powdered Activated Carbon Contactors	6-116
6-91	Capital Costs for Ozone Facilities	6-117
6-92	Capital Costs for Chlorine Dioxide Facilities	6-118
6-93	Capital Costs for Ozone Facilities	6-119
6-94	Capital Costs for Granular Carbon Adsorber Facilities	6-120
6-95	Capital Costs for Granular Activated Carbon Adsorber Facilities	6-121
6-96	Capital Costs for Powdered Activated Carbon Contactors	6-122
6-97	Capital Costs for Ozone Facilities	6-123
6-98	Capital Costs for Chlorine Dioxide Facilities	6-124
6-99	Capital Costs for Ozone Facilities	6-125
6-100	Capital Costs for Granular Carbon Adsorber Facilities	6-126
6-101	Capital Costs for Granular Activated Carbon Adsorber Facilities	6-127
6-102	Capital Costs for Powdered Activated Carbon Contactors	6-128
6-103	Capital Costs for Ozone Facilities	6-129
6-104	Capital Costs for Chlorine Dioxide Facilities	6-130
6-105	Capital Costs for Ozone Facilities	6-131
6-106	Capital Costs for Granular Carbon Adsorber Facilities	6-132
6-107	Capital Costs for Granular Activated Carbon Adsorber Facilities	6-133
6-108	Capital Costs for Powdered Activated Carbon Contactors	6-134
6-109	Capital Costs for Ozone Facilities	6-135
6-110	Capital Costs for Chlorine Dioxide Facilities	6-136
6-111	Capital Costs for Ozone Facilities	6-137
6-112	Capital Costs for Granular Carbon Adsorber Facilities	6-138
6-113	Capital Costs for Granular Activated Carbon Adsorber Facilities	6-139
6-114	Capital Costs for Powdered Activated Carbon Contactors	6-140
6-115	Capital Costs for Ozone Facilities	6-141
6-116	Capital Costs for Chlorine Dioxide Facilities	6-142
6-117	Capital Costs for Ozone Facilities	6-143
6-118	Capital Costs for Granular Carbon Adsorber Facilities	6-144
6-119	Capital Costs for Granular Activated Carbon Adsorber Facilities	6-145
6-120	Capital Costs for Powdered Activated Carbon Contactors	6-146
6-121	Capital Costs for Ozone Facilities	6-147
6-122	Capital Costs for Chlorine Dioxide Facilities	6-148
6-123	Capital Costs for Ozone Facilities	6-149
6-124	Capital Costs for Granular Carbon Adsorber Facilities	6-150
6-125	Capital Costs for Granular Activated Carbon Adsorber Facilities	6-151
6-126	Capital Costs for Powdered Activated Carbon Contactors	6-152
6-127	Capital Costs for Ozone Facilities	6-153
6-128	Capital Costs for Chlorine Dioxide Facilities	6-154
6-129	Capital Costs for Ozone Facilities	6-155
6-130	Capital Costs for Granular Carbon Adsorber Facilities	6-156
6-131	Capital Costs for Granular Activated Carbon Adsorber Facilities	6-157
6-132	Capital Costs for Powdered Activated Carbon Contactors	6-158
6-133	Capital Costs for Ozone Facilities	6-159
6-134	Capital Costs for Chlorine Dioxide Facilities	6-160
6-135	Capital Costs for Ozone Facilities	6-161
6-136	Capital Costs for Granular Carbon Adsorber Facilities	6-162
6-137	Capital Costs for Granular Activated Carbon Adsorber Facilities	6-163
6-138	Capital Costs for Powdered Activated Carbon Contactors	6-164
6-139	Capital Costs for Ozone Facilities	6-165
6-140	Capital Costs for Chlorine Dioxide Facilities	6-166
6-141	Capital Costs for Ozone Facilities	6-167
6-142	Capital Costs for Granular Carbon Adsorber Facilities	6-168
6-143	Capital Costs for Granular Activated Carbon Adsorber Facilities	6-169
6-144	Capital Costs for Powdered Activated Carbon Contactors	6-170
6-145	Capital Costs for Ozone Facilities	6-171
6-146	Capital Costs for Chlorine Dioxide Facilities	6-172
6-147	Capital Costs for Ozone Facilities	6-173
6-148	Capital Costs for Granular Carbon Adsorber Facilities	6-174
6-149	Capital Costs for Granular Activated Carbon Adsorber Facilities	6-175
6-150	Capital Costs for Powdered Activated Carbon Contactors	6-176
6-151	Capital Costs for Ozone Facilities	6-177
6-152	Capital Costs for Chlorine Dioxide Facilities	6-178
6-153	Capital Costs for Ozone Facilities	6-179
6-154	Capital Costs for Granular Carbon Adsorber Facilities	6-180
6-155	Capital Costs for Granular Activated Carbon Adsorber Facilities	6-181
6-156	Capital Costs for Powdered Activated Carbon Contactors	6-182
6-157	Capital Costs for Ozone Facilities	6-183
6-158	Capital Costs for Chlorine Dioxide Facilities	6-184
6-159	Capital Costs for Ozone Facilities	6-185
6-160	Capital Costs for Granular Carbon Adsorber Facilities	6-186
6-161	Capital Costs for Granular Activated Carbon Adsorber Facilities	6-187
6-162	Capital Costs for Powdered Activated Carbon Contactors	6-188
6-163	Capital Costs for Ozone Facilities	6-189
6-164	Capital Costs for Chlorine Dioxide Facilities	6-190
6-165	Capital Costs for Ozone Facilities	6-191
6-166	Capital Costs for Granular Carbon Adsorber Facilities	6-192
6-167	Capital Costs for Granular Activated Carbon Adsorber Facilities	6-193
6-168	Capital Costs for Powdered Activated Carbon Contactors	6-194
6-169	Capital Costs for Ozone Facilities	6-195
6-170	Capital Costs for Chlorine Dioxide Facilities	6-196
6-171	Capital Costs for Ozone Facilities	6-197
6-172	Capital Costs for Granular Carbon Adsorber Facilities	6-198
6-173	Capital Costs for Granular Activated Carbon Adsorber Facilities	6-199
6-174	Capital Costs for Powdered Activated Carbon Contactors	6-200
6-175	Capital Costs for Ozone Facilities	6-201
6-176	Capital Costs for Chlorine Dioxide Facilities	6-202
6-177	Capital Costs for Ozone Facilities	6-203
6-178	Capital Costs for Granular Carbon Adsorber Facilities	6-204
6-179	Capital Costs for Granular Activated Carbon Adsorber Facilities	6-205
6-180	Capital Costs for Powdered Activated Carbon Contactors	6-206
6-181	Capital Costs for Ozone Facilities	6-207
6-182	Capital Costs for Chlorine Dioxide Facilities	6-208
6-183	Capital Costs for Ozone Facilities	6-209
6-184	Capital Costs for Granular Carbon Adsorber Facilities	6-210
6-185	Capital Costs for Granular Activated Carbon Adsorber Facilities	6-211
6-186	Capital Costs for Powdered Activated Carbon Contactors	6-212
6-187	Capital Costs for Ozone Facilities	6-213
6-188	Capital Costs for Chlorine Dioxide Facilities	6-214
6-189	Capital Costs for Ozone Facilities	6-215
6-190	Capital Costs for Granular Carbon Adsorber Facilities	6-216
6-191	Capital Costs for Granular Activated Carbon Adsorber Facilities	6-217
6-192	Capital Costs for Powdered Activated Carbon Contactors	6-218
6-193	Capital Costs for Ozone Facilities	6-219
6-194	Capital Costs for Chlorine Dioxide Facilities	6-220
6-195	Capital Costs for Ozone Facilities	6-221
6-196	Capital Costs for Granular Carbon Adsorber Facilities	6-222
6-197	Capital Costs for Granular Activated Carbon Adsorber Facilities	6-223
6-198	Capital Costs for Powdered Activated Carbon Contactors	6-224
6-199	Capital Costs for Ozone Facilities	6-225
6-200	Capital Costs for Chlorine Dioxide Facilities	6-226
6-201	Capital Costs for Ozone Facilities	6-227
6-202	Capital Costs for Granular Carbon Adsorber Facilities	6-228
6-203	Capital Costs for Granular Activated Carbon Adsorber Facilities	6-229
6-204	Capital Costs for Powdered Activated Carbon Contactors	6-230
6-205	Capital Costs for Ozone Facilities	6-231
6-206	Capital Costs for Chlorine Dioxide Facilities	6-232
6-207	Capital Costs for Ozone Facilities	6-233
6-208	Capital Costs for Granular Carbon Adsorber Facilities	6-234
6-209	Capital Costs for Granular Activated Carbon Adsorber Facilities	6-235
6-210	Capital Costs for Powdered Activated Carbon Contactors	6-236
6-211	Capital Costs for Ozone Facilities	6-237
6-212	Capital Costs for Chlorine Dioxide Facilities	6-238
6-213	Capital Costs for Ozone Facilities	6-239
6-214	Capital Costs for Granular Carbon Adsorber Facilities	6-240
6-215	Capital Costs for Granular Activated Carbon Adsorber Facilities	6-241
6-216	Capital Costs for Powdered Activated Carbon Contactors	6-242
6-217	Capital Costs for Ozone Facilities	6-243
6-218	Capital Costs for Chlorine Dioxide Facilities	6-244
6-219	Capital Costs for Ozone Facilities	6-245
6-220	Capital Costs for Granular Carbon Adsorber Facilities	6-246
6-221	Capital Costs for Granular Activated Carbon Adsorber Facilities	6-247
6-222	Capital Costs for Powdered Activated Carbon Contactors	6-248
6-223	Capital Costs for Ozone Facilities	6-249
6-224	Capital Costs for Chlorine Dioxide Facilities	6-250
6-225	Capital Costs for Ozone Facilities	6-251
6-226	Capital Costs for Granular Carbon Adsorber Facilities	6-252
6-227	Capital Costs for Granular Activated Carbon Adsorber Facilities	6-253
6-228	Capital Costs for Powdered Activated Carbon Contactors	6-254
6-229	Capital Costs for Ozone Facilities	6-255
6-230	Capital Costs for Chlorine Dioxide Facilities	6-256
6-231	Capital Costs for Ozone Facilities	6-257
6-232	Capital Costs for Granular Carbon Adsorber Facilities	6-258
6-233	Capital Costs for Granular Activated Carbon Adsorber Facilities	6-259
6-234	Capital Costs for Powdered Activated Carbon Contactors	6-260
6-235	Capital Costs for Ozone Facilities	6-261
6-236	Capital Costs for Chlorine Dioxide Facilities	6-262
6-237	Capital Costs for Ozone Facilities	6-263
6-238	Capital Costs for Granular Carbon Adsorber Facilities	6-264
6-239	Capital Costs for Granular Activated Carbon Adsorber Facilities	6-265
6-240	Capital Costs for Powdered Activated Carbon Contactors	6-266
6-241	Capital Costs for Ozone Facilities	6-267
6-242	Capital Costs for Chlorine Dioxide Facilities	6-268
6-243	Capital Costs for Ozone Facilities	6-269
6-244	Capital Costs for Granular Carbon Adsorber Facilities	6-270
6-245	Capital Costs for Granular Activated Carbon Adsorber Facilities	6-271
6-246	Capital Costs for Powdered Activated Carbon Contactors	6-272
6-247	Capital Costs for Ozone Facilities	6-273
6-248	Capital Costs for Chlorine Dioxide Facilities	6-274
6-249	Capital Costs for Ozone Facilities	6-275
6-250	Capital Costs for Granular Carbon Adsorber Facilities	6-276
6-251	Capital Costs for Granular Activated Carbon Adsorber Facilities	6-277
6-252	Capital Costs for Powdered Activated Carbon Contactors	6-278
6-253	Capital Costs for Ozone Facilities	6-279
6-254	Capital Costs for Chlorine Dioxide Facilities	6-280
6-255	Capital Costs for Ozone Facilities	6-281
6-256	Capital Costs for Granular Carbon Adsorber Facilities	6-282
6-257	Capital Costs for Granular Activated Carbon Adsorber Facilities	6-283
6-258	Capital Costs for Powdered Activated Carbon Contactors	6-284
6-259	Capital Costs for Ozone Facilities	6-285
6-260	Capital Costs for Chlorine Dioxide Facilities	6-286
6-261	Capital Costs for Ozone Facilities	6-287
6-262	Capital Costs for Granular Carbon Adsorber Facilities	6-288
6-263	Capital Costs for Granular Activated Carbon Adsorber Facilities	6-289
6-264	Capital Costs for Powdered Activated Carbon Contactors	6-290
6-265	Capital Costs for Ozone Facilities	6-291
6-266	Capital Costs for Chlorine Dioxide Facilities	6-292
6-267	Capital Costs for Ozone Facilities	6-293
6-268	Capital Costs for Granular Carbon Adsorber Facilities	6-294
6-269	Capital Costs for Granular Activated Carbon Adsorber Facilities	6-295
6-270	Capital Costs for Powdered Activated Carbon Contactors	6-296
6-271	Capital Costs for Ozone Facilities	6-297
6-272	Capital Costs for Chlorine Dioxide Facilities	6-298
6-273	Capital Costs for Ozone Facilities	6-299
6-274	Capital Costs for Granular Carbon Adsorber Facilities	6-300
6-275	Capital Costs for Granular Activated Carbon Adsorber Facilities	6-301
6-276	Capital Costs for Powdered Activated Carbon Contactors	6-302
6-277	Capital Costs for Ozone Facilities	6-303
6-278	Capital Costs for Chlorine Dioxide Facilities	6-304
6-279	Capital Costs for Ozone Facilities	6-305
6-280	Capital Costs for Granular Carbon Adsorber Facilities	6-306
6-281	Capital Costs for Granular Activated Carbon Adsorber Facilities	6-307
6-282	Capital Costs for Powdered Activated Carbon Contactors	6-308
6-283	Capital Costs for Ozone Facilities	6-309
6-284	Capital Costs for Chlorine Dioxide Facilities	6-310
6-285	Capital Costs for Ozone Facilities	6-311
6-286	Capital Costs for Granular Carbon Adsorber Facilities	6-312
6-287	Capital Costs for Granular Activated Carbon Adsorber Facilities	6-313
6-288	Capital Costs for Powdered Activated Carbon Contactors	6-314
6-289	Capital Costs for Ozone Facilities	6-315
6-290	Capital Costs for Chlorine Dioxide Facilities	6-316
6-291	Capital Costs for Ozone Facilities	6-317
6-292	Capital Costs for Granular Carbon Adsorber Facilities	6-318
6-293	Capital Costs for Granular Activated Carbon Adsorber Facilities	6-319
6-294	Capital Costs for Powdered Activated Carbon Contactors	6-320
6-295	Capital Costs for Ozone Facilities	6-321
6-296	Capital Costs for Chlorine Dioxide Facilities	6-322
6-297	Capital Costs for Ozone Facilities	6-323
6-298	Capital Costs for Granular Carbon Adsorber Facilities	6-324
6-299	Capital Costs for Granular Activated Carbon Adsorber Facilities	6-325
6-300	Capital Costs for Powdered Activated Carbon Contactors	6-326
6-301	Capital Costs for Ozone Facilities	6-327
6-302	Capital Costs for Chlorine Dioxide Facilities	6-328
6-303	Capital Costs for Ozone Facilities	6-329
6-304	Capital Costs for Granular Carbon Adsorber Facilities	6-330
6-305	Capital Costs for Granular Activated Carbon Adsorber Facilities	6-331
6-306	Capital Costs for Powdered Activated Carbon Contactors	6-332
6-307	Capital Costs for Ozone Facilities	6-333
6-308	Capital Costs for Chlorine Dioxide Facilities	6-334
6-309	Capital Costs for Ozone Facilities	6-335
6-310	Capital Costs for Granular Carbon Adsorber Facilities	6-336
6-311	Capital Costs for Granular Activated Carbon Adsorber Facilities	6-337
6-312	Capital Costs for Powdered Activated Carbon Contactors	6-338
6-313	Capital Costs for Ozone Facilities	6-339
6-314	Capital Costs for Chlorine Dioxide Facilities	6-340
6-315	Capital Costs for Ozone Facilities	6-341
6-316	Capital Costs for Granular Carbon Adsorber Facilities	6-342
6-317	Capital Costs for Granular Activated Carbon Adsorber Facilities	6-343
6-318	Capital Costs for Powdered Activated Carbon Contactors	6-344
6-319	Capital Costs for Ozone Facilities	6-345
6-320	Capital Costs for Chlorine Dioxide Facilities	6-346
6-321	Capital Costs for Ozone Facilities	6-347
6-322	Capital Costs for Granular Carbon Adsorber Facilities	6-348
6-323	Capital Costs for Granular Activated Carbon Adsorber Facilities	6-349
6-324	Capital Costs for Powdered Activated Carbon Contactors	6-350
6-325	Capital Costs for Ozone Facilities	6-351
6-326	Capital Costs for Chlorine Dioxide Facilities	6-352
6-327	Capital Costs for Ozone Facilities	6-353
6-328	Capital Costs for Granular Carbon Adsorber Facilities	6-354
6-329	Capital Costs for Granular Activated Carbon Adsorber Facilities	6-355
6-330	Capital Costs for Powdered Activated Carbon Contactors	6-356
6-331	Capital Costs for Ozone Facilities	6-357
6-332	Capital Costs for Chlorine Dioxide Facilities	6-358
6-333	Capital Costs for Ozone Facilities	6-359
6-334	Capital Costs for Granular Carbon Adsorber Facilities	6-360
6-335	Capital Costs for Granular Activated Carbon Adsorber Facilities	6-361
6-336	Capital Costs for Powdered Activated Carbon Contactors	6-362
6-337	Capital Costs for Ozone Facilities	6-363
6-338	Capital Costs for Chlorine Dioxide Facilities	6-364
6-339	Capital Costs for Ozone Facilities	6-365
6-340	Capital Costs for Granular Carbon Adsorber Facilities	6-366
6-341	Capital Costs for Granular Activated Carbon Adsorber Facilities	6-367
6-342	Capital Costs for Powdered Activated Carbon Contactors	6-368
6-343	Capital Costs for Ozone Facilities	6-369
6-344	Capital Costs for Chlorine Dioxide Facilities	6-370
6-345	Capital Costs for Ozone Facilities	6-371
6-346	Capital Costs for Granular Carbon Adsorber Facilities	6-372
6-347	Capital Costs for Granular Activated Carbon Adsorber Facilities	6-373
6-348	Capital Costs for Powdered Activated Carbon Contactors	6-374
6-349	Capital Costs for Ozone Facilities	6-375
6-350	Capital Costs for Chlorine Dioxide Facilities	6-376
6-351	Capital Costs for Ozone Facilities	6-377
6-352	Capital Costs for Granular Carbon Adsorber Facilities	6-378
6-353	Capital Costs for Granular Activated Carbon Adsorber Facilities	6-379
6-354	Capital Costs for Powdered Activated Carbon Contactors	6-380
6-355	Capital Costs for Ozone Facilities	6-381
6-356	Capital Costs for Chlorine Dioxide Facilities	6-382
6-357	Capital Costs for Ozone Facilities	6-383
6-358	Capital Costs for Granular Carbon Adsorber Facilities	6-384
6-359	Capital Costs for Granular Activated Carbon Adsorber Facilities	6-385
6-360	Capital Costs for Powdered Activated Carbon Contactors	6-386
6-361	Capital Costs for Ozone Facilities	6-387
6-362	Capital Costs for Chlorine Dioxide Facilities	6-388
6-363	Capital Costs for Ozone Facilities	6-389
6-364	Capital Costs for Granular Carbon Adsorber Facilities	6-390
6-365	Capital Costs for Granular Activated Carbon Adsorber Facilities	6-391
6-366	Capital Costs for Powdered Activated Carbon Contactors	6-392
6-367	Capital Costs for Ozone Facilities	6-393
6-368	Capital Costs for Chlorine Dioxide Facilities	6-394
6-369	Capital Costs for Ozone Facilities	6-395
6-370	Capital Costs for Granular Carbon Adsorber Facilities	6-396
6-371	Capital Costs for Granular Activated Carbon Adsorber Facilities	6-397
6-372	Capital Costs for Powdered Activated Carbon Contactors	6-398
6-373	Capital Costs for Ozone Facilities	6-399
6-374	Capital Costs for Chlorine Dioxide Facilities	6-400
6-375	Capital Costs for Ozone Facilities	6-401
6-376	Capital Costs for Granular Carbon Adsorber Facilities	6-402
6-377	Capital Costs for Granular Activated Carbon Adsorber Facilities	6-403
6-378	Capital Costs for Powdered Activated Carbon Contactors	6-404
6-379	Capital Costs for Ozone Facilities	6-405
6-380	Capital Costs for Chlorine Dioxide Facilities	6-406
6-381	Capital Costs for Ozone Facilities	6-407
6-382	Capital Costs for Granular Carbon Adsorber Facilities	6-408
6-383	Capital Costs for Granular Activated Carbon Adsorber Facilities	6-409
6-384	Capital Costs for Powdered Activated Carbon Contactors	6-410
6-385	Capital Costs for Ozone Facilities	6-411
6-386	Capital Costs for Chlorine Dioxide Facilities	6-412
6-387	Capital Costs for Ozone Facilities	6-413
6-388	Capital Costs for Granular Carbon Adsorber Facilities	6-414
6-389	Capital Costs for Granular Activated Carbon Adsorber Facilities	6-415
6-390	Capital Costs for Powdered Activated Carbon Contactors	6-416
6-391	Capital Costs for Ozone Facilities	6-417
6-392	Capital Costs for Chlorine Dioxide Facilities	6-418
6-393	Capital Costs for Ozone Facilities	6-419
6-394	Capital Costs for Granular Carbon Adsorber Facilities	6-420
6-395	Capital Costs for Granular Activated Carbon Adsorber Facilities	6-421
6-396	Capital Costs for Powdered Activated Carbon Contactors	6-422
6-397	Capital Costs for Ozone Facilities	6-423
6-398	Capital Costs for Chlorine Dioxide Facilities	6-424
6-399	Capital Costs for Ozone Facilities	6-425
6-400	Capital Costs for Granular Carbon Adsorber Facilities	6-426
6-401	Capital Costs for Granular Activated Carbon Adsorber Facilities	6-427
6-402	Capital Costs for Powdered Activated Carbon Contactors	6-428
6-403	Capital Costs for Ozone Facilities	6-429
6-404	Capital Costs for Chlorine Dioxide Facilities	6-430
6-405	Capital Costs for Ozone Facilities	6-431
6-406	Capital Costs for Granular Carbon Adsorber Facilities	6-432
6-407	Capital Costs for Granular Activated Carbon Adsorber Facilities	6-433
6-408	Capital Costs for Powdered Activated Carbon Contactors	6-434
6-409	Capital Costs for Ozone Facilities	6-435
6-410	Capital Costs for Chlorine Dioxide Facilities	6-436
6-411	Capital Costs for Ozone Facilities	6-437
6-412	Capital Costs for Granular Carbon Adsorber Facilities	6-438
6-413	Capital Costs for Granular Activated Carbon Adsorber Facilities	6-439
6-414	Capital Costs for Powdered Activated Carbon Contactors	6-440
6-415	Capital Costs for Ozone Facilities	6-441
6-416	Capital Costs for Chlorine Dioxide Facilities	6-442
6-417	Capital Costs for Ozone Facilities	6-443
6-418	Capital Costs for Granular Carbon Adsorber Facilities	6-444
6-419	Capital Costs for Granular Activated Carbon Adsorber Facilities	6-445
6-420	Capital Costs for Powdered Activated Carbon Contactors	6-446
6-421	Capital Costs for Ozone Facilities	6-447
6-422	Capital Costs for Chlorine Dioxide Facilities	6-448
6-423	Capital Costs for Ozone Facilities	6-449
6-424	Capital Costs for Granular Carbon Adsorber Facilities	6-450
6-425	Capital Costs for Granular Activated Carbon Adsorber Facilities	6-451
6-426	Capital Costs for Powdered Activated Carbon Contactors	6-452
6-427	Capital Costs for Ozone Facilities	6-453
6-428	Capital Costs for Chlorine Dioxide Facilities	6-454
6-429	Capital Costs for Ozone Facilities	6-455
6-430	Capital Costs for Granular Carbon Adsorber Facilities	6-456
6-431	Capital Costs for Granular Activated Carbon Adsorber Facilities	6-457
6-432	Capital Costs for Powdered Activated Carbon Contactors	6-458
6-433	Capital Costs for Ozone Facilities	6-459
6-434	Capital Costs for Chlorine Dioxide Facilities	6-460
6-435	Capital Costs for Ozone Facilities	6-461
6-436	Capital Costs for Granular Carbon Adsorber Facilities	6-462
6-437	Capital Costs for Granular Activated Carbon Adsorber Facilities	6-463
6-438	Capital Costs for Powdered Activated Carbon Contactors	6-464
6-439	Capital Costs for Ozone Facilities	6-465
6-440	Capital Costs for Chlorine Dioxide Facilities	6-466
6-441	Capital Costs for Ozone Facilities	6-467
6-442	Capital Costs for Granular Carbon Adsorber Facilities	6-468
6-443	Capital Costs for Granular Activated Carbon Adsorber Facilities	6-469
6-444	Capital Costs for Powdered Activated Carbon Contactors	6-470
6-445	Capital Costs for Ozone Facilities	6-471
6-446	Capital Costs for Chlorine Dioxide Facilities

1.0 INTRODUCTION

1.1 CHLORINATION BY-PRODUCT FORMATION

Free chlorine is widely used in water treatment because it is versatile, effective, and inexpensive. Chlorine has a long history of use as a disinfectant and sometimes is used to reduce taste, odor, and color in untreated water. In the United States, chlorine is the most common disinfectant.

Health effects research has indicated that use of chlorine in water treatment can lead to the formation of a group of compounds that may be carcinogenic in humans. These compounds are generally referred to as chlorination by-products. Their presence in waters treated with free chlorine is pervasive.

In the early 1970's, researchers first reported the formation of chloroform in drinking water as a by-product of the chlorination process. Ensuing research has shown that four chlorination by-products are commonly found: chloroform ($CHCl_3$), bromodichloromethane ($CHBrCl_2$), dibromochloromethane ($CHBr_2Cl$), and bromoform ($CHBr_3$). All four of these compounds are trihalomethanes (THM) and are shown in figure 1-1.

The federal government promulgated regulations in 1977 limiting the maximum allowable levels of THMs in drinking water. As a consequence of the 1986 Amendments to the Safe Drinking Water Act, the U.S. Environmental Protection Agency (EPA) will eventually promulgate a revised level for THMs. The New Jersey Department of Environmental Protection (NJDEP) will also probably promulgate revised statewide standards for the level of THMs in drinking water.

1.2 NEW JERSEY'S RESPONSE

In 1983, NJDEP began a major program to evaluate organic contamination of drinking water supplies in the state. A major impetus to this program was the passage in January 1984 of the New Jersey Safe Drinking Water Act

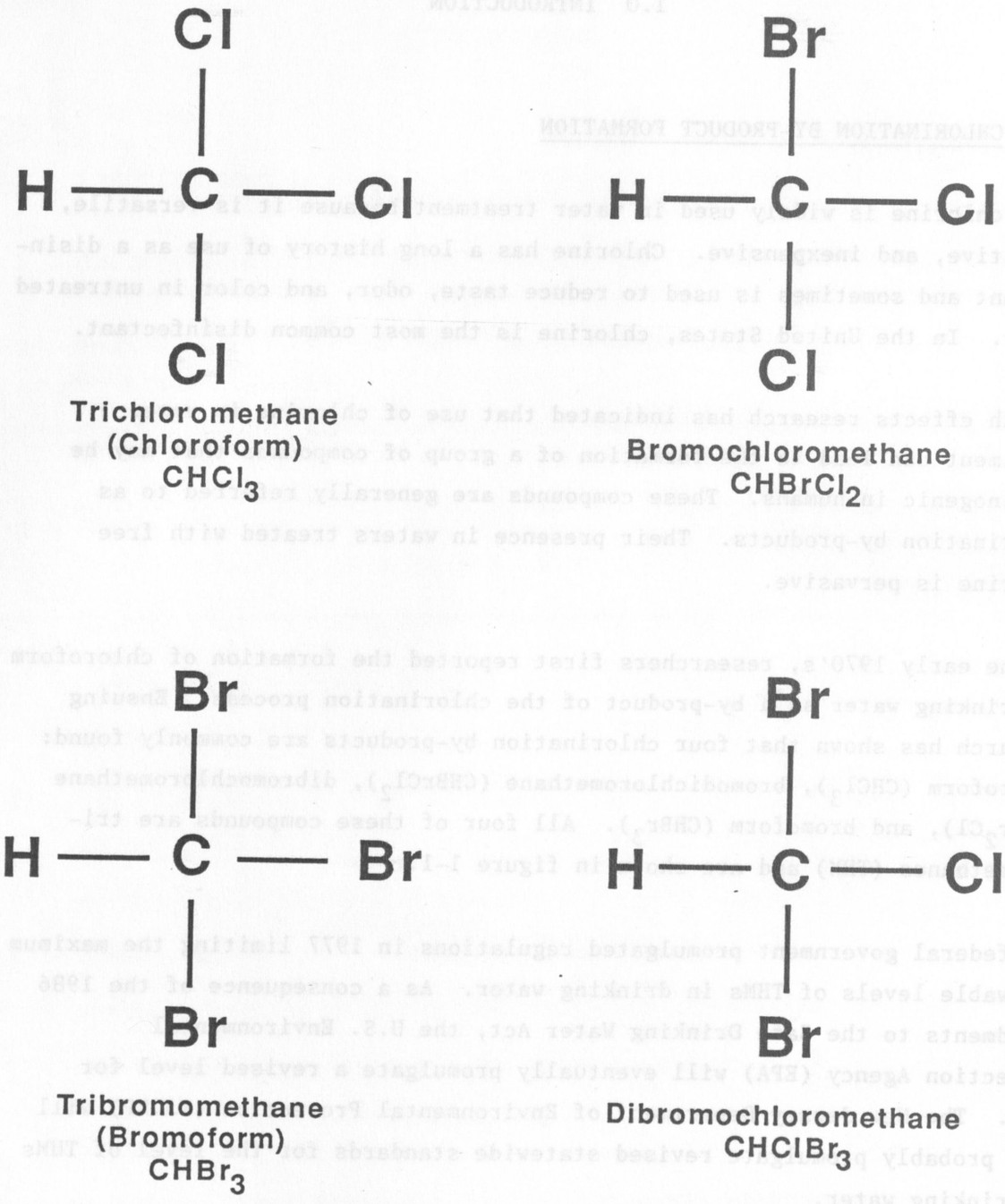

CDM

environmental engineers, scientists, planners & management consultants

Figure 1-1

Structural Formulas and Names of the Regulated Trihalomethanes

Prevention and Removal of Chlorination By-Products

Amendments. This law is referred to as the "A-280 Law" because it resulted from the NJ Assembly bill No. 280. A copy of the bill is included in appendix F. The passage by the federal government of the Safe Drinking Water Act Amendments of 1986 has provided additional impetus to New Jersey's program.

With the passage of the A-280 law, New Jersey took the initiative controlling the occurrence of synthetic organic compounds in drinking water supplies, and in establishing limits.

In conjunction with implementation of the A-280 law, NJDEP commissioned a series of studies to aid in the evaluation effort. These studies, referred to as the New Jersey Special Water Treatment Study - Phases I and II, provide part of the technical basis for New Jersey's efforts to assure safe drinking water supplies. This report is an amendment to the Phase II study.

1.3 ESTABLISHING A REGULATORY FRAMEWORK

Law A-280 required that NJDEP set maximum contaminant levels (MCL) for organic compounds in drinking water. The law also created a group -- the New Jersey Drinking Water Quality Institute (DWQI) -- within NJDEP specifically charged with making recommendations regarding MCLs to the Commissioner of Environmental Protection.

In the case of carcinogenic compounds, A-280 requires DWQI to:

> "...establish, within the limits of medical, scientific, and technological feasibility, maximum contaminant levels ... which, with respect to carcinogens, permit cancer in no more than one in one million persons ingesting that chemical for a lifetime..."

This statement has been interpreted to mean that the MCLs established for carcinogens must not increase the relative risk of cancer by more than one case in one million persons each year, assuming that an adult ingests two liters of drinking water each day over a 70-year lifetime.

In the case of noncarcinogens and "those carcinogens resulting from compounds with public health benefits" the law requires that MCLs be set at levels, within the limits of practicability and feasibility, that can eliminate all adverse physiological effects resulting from ingestion.

As required under section 2B of the A-280 law, DWQI must also make recommendations concerning additional compounds that should be considered for regulation. A group of compounds created by the use of chlorine in water treatment, generally referred to as chlorination by-products, are among those compounds to be considered. The chlorination by-products of greatest concern are the trihalomethanes. DWQI's deliberations in regard to regulation of THMs are currently (1988) making underway. This study will provide information to assist DWQI in making these recommendations.

1.4 THE OBJECTIVE OF THIS STUDY

The objective of this study is to determine the feasibility of limiting total THMs in drinking water to 20 micrograms per liter (mcg/l), and any single THM to 5 mcg/l. This level would be more stringent than the present federal and state total THM limit of 0.10 milligrams per liter (mg/l).

This study addresses the feasibility of implementing the more stringent level. It also provides information to NJDEP on the extent of THM presence in drinking water supplies in the state, on available technologies and associated costs for THM reduction, and on anticipated obstacles to control of THMs.

1.5 FORMATION OF THMs

Trihalomethanes are formed when free chlorine, added for disinfection, reacts with naturally occurring and synthetic organics. Naturally occurring bromine, also found in raw water, can form brominated THMs as a result of being catalyzed by the addition of chlorine.

The molecular structures of the four THMs currently regulated are shown in figure 1-1. Each molecule consists of a carbon atom with one hydrogen and

three halogen atoms attached. (The halogens are a family of elements that include fluorine, chlorine, bromine, and iodine. However, fluorine does not form THMs when added to water).

The organic materials in water that react with halogens to form THMs are defined as THM precursors. The major THM precursors are primarily humic organics, consisting of plant decomposition products such as dry leaves, grasses, algae, and other organic materials that leach into water. These products form most of the naturally occurring carbon present in water. They are often referred to as humic acids because they generally contain many acid groups.

Since the concentration of humic organics is ordinarily higher in surface water supplies than in ground water, the potential for THM formation is much greater when surface waters are disinfected with chlorine.

The measure of the maximum potential of a water supply to form THMs upon chlorination is defined as the trihalomethane formation potential (THFMP). THMFP can be measured in a laboratory by dosing a water sample with chlorine, allowing it to react for a specific period, then measuring the THMs that form. The level of THMs will vary with pH, temperature, contact time, concentration of organic precursors and, to a lesser extent, the concentration of chlorine.

(special_waterii/10)

Section 2

2.0 OCCURRENCE OF TRIHALOMETHANES IN NEW JERSEY DRINKING WATER

New Jersey's goal is to control trihalomethane (THM) formation in drinking water supplies throughout the state to the lowest feasible level. Available information on the prevalence of THMs in drinking water supplies was consolidated and analyzed to determine the feasibility of achieving this goal.

Relevant data was collected from the following sources:

1. The THM compliance database, a computerized file of TTHM sampling data reported to the State
2. Results of a survey questionnaire completed by 60 surface and ground water purveyors (performed as part of this study)
3. Data from sampling programs conducted at five public water treatment plants (performed as part of the Special Water Treatment Study - Phase II)
4. Data collected from various sources on organic contaminants (as part of the Special Water Treatment Study - Phase I)

2.1 NJDEP THM COMPLIANCE DATABASE

As a part of this study, the New Jersey Department of Environmental Protection (NJDEP) compiled data from its THM compliance database for the purposes of illustrating total THM levels in New Jersey drinking water.

The THM compliance database is a computerized file of the total THM (TTHM) sample analysis data reported to NJDEP in compliance with the present State THM regulation. The database contains data from the 144 purveyors in New Jersey serving more than 10,000 customers, and covers a time period beginning with the early 1980's and extending to the present. Purveyor name and ID number, sample date, and total THM concentration in micrograms per liter (mcg/l) are included.

Under the THM regulation, which conforms with federal requirements, each purveyor is required to take samples from four locations in the distri-

bution system during each of the four quarters of the year. Although these samples are analyzed for each of the four trihalomethanes and the results are reported to NJDEP, only the total THM results were recorded in the database since compliance with the standard of 0.10 mg/l was calculated on the basis of total THMs, not individual levels. NJDEP, as of 1987, required that THM compliance data include the individual levels.

Figure 2-1 indicates the range of concentrations of the TTHM compliance sample data. Of the 10,725 samples in the database, 7,074 or 66 percent fall within the zero to 10 mcg/l range, 679 or 6 percent fall within the 11 to 20 mcg/l range, 1,601 or 15 percent fall within the 51 to 100 mcg/l range, and 370 or 3 percent fall within the greater than 100 mcg/l range. Seventy-two percent of the samples contain less than 20 mcg/l total THMs.

Table 2-1 indicates the relative performance of New Jersey's drinking water purveyors with respect to total trihalomethanes. The purveyors are ranked according to the most recently computed four quarter TTHM average.

Ideally, for each purveyor, the statistical database would contain the TTHM levels for four samples taken from different locations in the distribution system for each quarter of the year. However, reporting requirement for THM data may be different for some purveyors, with only one sample per quarter reported in some cases. Other purveyors have reported more than four TTHM sample analyses for each quarter. These dissimilarities in the raw data are based on source and treatment and did not eliminate any purveyors from the ranking. The computational method used all samples for a purveyor from the four most recent quarters of data in the database. In most cases, these were the last three quarters of 1987 and the first quarter of 1988. A complete listing of the sampling periods, sample quantities, and averages for each purveyor appears in appendix C.

Even though the data is not completely uniform, this ranking represents a very useful record of the present level of TTHMs in New Jersey drinking water. Since the data is provided by purveyors for the purpose of complying with State and federal regulations it is expected to be reliable

NJDEP THM Compliance Database

10,725 Total THM Samples Grouped According to Concentration Range

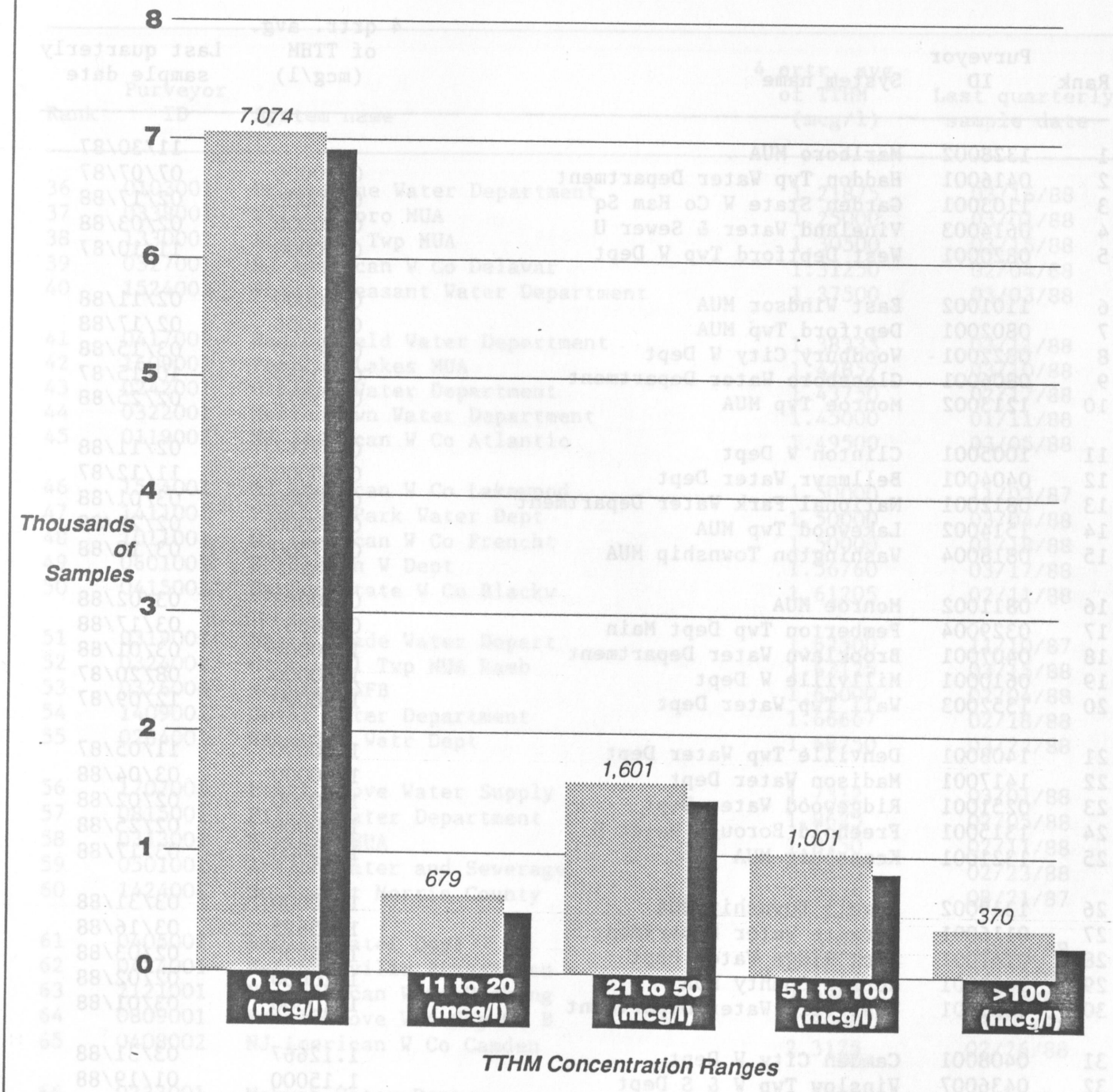

CDM

environmental engineers, scientists, planners & management consultants

Figure 2-1

NJDEP THM Concentration Groupings

TABLE 2-1

NJDEP THM COMPLIANCE DATABASE
PURVEYORS RANKED BY MOST RECENT FOUR QUARTER AVERAGE
OF TOTAL THM CONCENTRATIONS

Rank	Purveyor ID	System name	4 qrtr. avg. of TTHM (mcg/l)	Last quarterly sample date
1	1328002	Marlboro MUA	.	11/30/87
2	0416001	Haddon Twp Water Department	0.50000	07/07/87
3	1103001	Garden State W Co Ham Sq	0.50000	02/17/88
4	0614003	Vineland Water & Sewer U	0.50000	02/03/88
5	0820001	West Deptford Twp W Dept	0.50000	11/10/87
6	1101002	East Windsor MUA	0.50000	02/11/88
7	0802001	Deptford Twp MUA	0.53056	02/17/88
8	0822001	Woodbury City W Dept	0.56250	03/15/88
9	0806001	Glassboro Water Department	0.63333	10/15/87
10	1213002	Monroe Twp MUA	0.63375	02/25/88
11	1005001	Clinton W Dept	0.69167	02/11/88
12	0404001	Bellmawr Water Dept	0.70000	11/12/87
13	0812001	National Park Water Department	0.70000	03/01/88
14	1514002	Lakewood Twp MUA	0.70000	02/22/88
15	0818004	Washington Township MUA	0.77500	03/10/88
16	0811002	Monroe MUA	0.80062	03/02/88
17	0329004	Pemberton Twp Dept Main	0.86667	03/17/88
18	0407001	Brooklawn Water Department	1.00000	03/01/88
19	0610001	Millville W Dept	1.00000	08/20/87
20	1352003	Wall Twp Water Dept	1.00000	12/09/87
21	1408001	Denville Twp Water Dept	1.00000	11/05/87
22	1417001	Madison Water Dept	1.00000	03/04/88
23	0251001	Ridgewood Water Dept	1.00000	02/02/88
24	1315001	Freehold Borough Water D	1.00000	02/25/88
25	1321001	Keansburg MUA	1.00000	03/17/88
26	1319002	Howell Township MUA	1.00000	03/31/88
27	0116001	Margate Water Department	1.05625	03/16/88
28	0247001	Park Ridge Water Dept	1.06250	02/03/88
29	1432001	Morris County MUA	1.10000	02/02/88
30	0821001	Westville Water Department	1.10000	03/01/88
31	0408001	Camden City W Dept	1.12667	03/31/88
32	0436007	Winslow Twp W & S Dept	1.15000	01/19/88
33	1502001	NJ American W Co Ocean C	1.16667	11/03/87
34	1429001	Parsippany-Troy Hills W	1.16667	02/17/88
35	1330002	Aberdeen Twp Water Dept	1.20000	03/16/88

TABLE 2-1
(continued)

NJDEP THM COMPLIANCE DATABASE
PURVEYORS RANKED BY MOST RECENT FOUR QUARTER AVERAGE
OF TOTAL THM CONCENTRATIONS

Rank	Purveyor ID	System name	4 qrtr. avg. of TTHM (mcg/l)	Last quarterly sample date
36	0103001	Brigantine Water Department	1.21875	03/16/88
37	0338001	Willingboro MUA	1.25000	03/01/88
38	1330001	Aberdeen Twp MUA	1.30500	03/15/88
39	0327001	NJ American W Co Delawar	1.31250	02/04/88
40	1524001	Point Pleasant Water Department	1.37500	03/03/88
41	0417001	Haddonfield Water Department	1.38333	03/11/88
42	1609001	Pompton Lakes MUA	1.42857	03/10/88
43	0242001	Oakland Water Department	1.43750	02/17/88
44	0322001	Moorestown Water Department	1.45000	01/11/88
45	0119002	NJ American W Co Atlantic	1.49500	03/05/88
46	1514001	NJ American W Co Lakewood	1.50000	11/03/87
47	1411001	Florham Park Water Dept	1.50000	03/04/88
48	1011001	NJ American W Co Frencht	1.50000	01/18/88
49	0601001	Bridgeton W Dept	1.56760	03/17/88
50	0415002	Garden State W Co Blackw	1.61205	02/11/88
51	0319001	Maple Shade Water Depart	1.62500	11/10/87
52	0324001	Mt Laurel Twp MUA Ramb	1.63125	03/15/88
53	0326006	McGuire AFB	1.65000	02/04/88
54	1409001	Dover Water Department	1.66667	02/18/88
55	0264001	Waldwick Watr Dept	1.68750	03/22/88
56	1707001	Penns Grove Water Supply	1.7312	03/01/88
57	0815001	Pitman Water Department	1.8625	02/05/88
58	0313001	Evesham MUA	1.8750	02/11/88
59	0501001	Avalon Water and Sewerage	1.8853	02/23/88
60	1424001	Southeast Morris County	1.9375	08/21/87
61	0405001	Berlin Water Dept	2.0125	03/01/88
62	0424001	Merchantville Pennsauken	2.1619	03/25/88
63	2121001	NJ American W Co Washing	2.2500	01/25/88
64	0809001	Penns Grove Wat Sup Co B	2.3000	03/01/88
65	0408002	NJ American W Co Camden	2.3125	02/26/88
66	0233001	Mahwah Water Dept	2.4375	02/29/88
67	1435002	Rockaway Twp Water Dept	2.4425	02/23/88
68	0506010	NJ American W. Co Neptune	2.4812	03/06/88
69	0323001	Mount Holly Water Company	2.5000	02/29/88
70	0306001	Burlington Twp W. Dept	2.5667	01/12/88

TABLE 2-1
(continued)

NJDEP THM COMPLIANCE DATABASE
PURVEYORS RANKED BY MOST RECENT FOUR QUARTER AVERAGE
OF TOTAL THM CONCENTRATIONS

Rank	Purveyor ID	System name	4 qrtr. avg. of TTHM (mcg/l)	Last quarterly sample date
71	1511001	Jackson Twp MUA	2.7455	12/10/87
72	0412001	Collingswood Water Department	2.8352	03/18/88
73	0111003	New Jersey Water Gallowa	2.8750	08/19/87
74	0510001	Stone Harbon W Dept	2.9062	03/21/88
75	1208001	NJ American W Co Jamesburg	2.9167	11/03/87
76	0248001	Ramsey Water Dept	3.0000	12/15/87
77	0418001	NJ American W Co Haddon	3.0000	02/29/88
78	2103001	NJ American W Co Belvine	3.0000	01/26/88
79	1339001	Shorelands Water Co Inc.	3.0719	01/26/88
80	1511012	Jackson Twp W Dept (Legle	3.1500	09/09/87
81	1613002	Wanaque W Dept	3.4000	03/22/88
82	1410001	East Hanover Twp Water D	3.4167	11/30/87
83	0705001	East Orange Water Dept	3.5062	03/15/88
84	1316001	Freehold Twp Water Dept	3.5333	12/16/87
85	1507005	Toms River Water Company	3.9250	03/04/88
86	1326001	Gordon's Corner Water Co	3.9750	03/11/88
87	0706001	Essex Fells Water Dept	4.0050	01/05/88
88	1509001	Harvey Cedars Water Dept	4.1000	03/10/88
89	1340001	Red Bank Watr Dept	4.1500	02/16/88
90	0228001	Ho-Ho-Kus Watr Dept	4.3333	02/02/88
91	0710001	Livingston Twp Div of Water	4.3950	02/09/88
92	1329001	Matawan Borough Water Department	4.7500	05/21/87
93	1221004	South Brunswick Twp Water Department	4.8333	03/23/88
94	1219001	Sayreville Water Department	6.0419	01/26/88
95	0414001	Gloucester City W Department	6.5625	03/11/88
96	0508001	NJ American W Co Ocean C	6.7500	03/06/88
97	1209002	Old Bridge MUA	6.7886	02/16/88
98	1604001	Hawthorne W Dept	6.9375	02/10/88
99	0511001	NJ American W Co Strathm	6.9375	03/06/88
100	0303001	Bordentown Water Department	6.9765	03/17/88
101	2108001	Hackettstown MUA	7.0200	09/17/87
102	1518004	Crestwood Village W Co	7.1433	11/10/87
103	0502001	Cape May Water & Sewer U	9.3143	03/15/88
104	1516001	Little Egg Harbor Twp Mu	10.5830	03/02/88
105	071709	Orange Water Dept	12.6867	02/09/88

TABLE 2-1
(continued)

NJDEP THM COMPLIANCE DATABASE
PURVEYORS RANKED BY MOST RECENT FOUR QUARTER AVERAGE
OF TOTAL THM CONCENTRATIONS

Rank	Purveyor ID	System name	4 qrtr. avg. of TTHM (mcg/l)	Last quarterly sample date
106	0122001	Ventnor City W & S Utilit	13.1450	02/03/88
107	1708001	Pennsville Twp W Dept	13.8111	11/17/87
108	1216001	Perth Amboy Dept of Muni	14.9344	02/09/88
109	1811001	Manville W Dept	15.0941	03/03/88
110	1225001	Middlesex W Co	16.0625	01/21/88
111	1431001	Pequannock Twp Water Department	17.706	02/23/88
112	2119001	Garden State W Phillipsburg	18.287	02/23/88
113	1214001	New Brunswick Water Department	19.565	03/03/88
114	2004002	Elizabethtown Water Co	19.764	02/16/88
115	1215001	North Brunswick Water Department	21.944	03/08/88
116	1401001	Boonton Water Department	24.024	02/25/88
117	1403001	Butler Water Department	25.375	02/29/88
118	1223001	South River Water Department	28.069	01/15/88
119	1808001	Franklin Twp Department Public	30.670	03/31/88
120	0712001	NJ American Water Co Short H	33.442	02/17/88
121	0217001	Fairlawn Water Department	33.962	03/01/88
122	1613001	N.J.D.W.S.C. Wanaque No.	37.275	02/03/88
123	0221001	Garfield Water Department	37.625	03/03/88
124	1601001	Bloomingdale Water Department	39.800	12/09/87
125	0514001	Wildwood W Department, City of	39.992	12/11/87
126	1204001	East Brunswick Water Department	40.927	02/04/88
127	0719001	South Orange Water Department	41.231	03/01/88
128	0906001	Department of Water Jersey City	42.858	01/26/88
129	1906002	Franklin Board of Public	43.625	09/24/87
130	0102001	Atlantic City MUA	43.883	12/09/87
131	2013001	Rahway W Department	44.487	03/18/88
132	0713001	Montclair Water Bureau	46.750	03/09/88
133	0325001	U.S. Army Fort Dix	48.896	10/28/87
134	1345001	N.J. American Water Co Monmouth	51.936	02/11/88
135	1111001	Trenton Water Department	52.082	01/22/88
136	1506001	Brick Township MUA	54.126	03/17/88
137	1614001	Wayne Twp Division of WA	57.550	03/15/88
138	0305001	Burlington City Water Department	58.987	03/30/88
139	1605002	Passaic Valley W Comm	59.637	02/02/88
140	0721001	West Caldwell W Department	61.287	01/20/88

TABLE 2-1
(continued)

NJDEP THM COMPLIANCE DATABASE
PURVEYORS RANKED BY MOST RECENT FOUR QUARTER AVERAGE
OF TOTAL THM CONCENTRATIONS

Rank	Purveyor ID	System name	4 qrtr. avg. of TTHM (mcg/l)	Last quarterly sample date
141	0714001	Newark Water Department	67.611	03/07/88
142	0238001	Hackensack Water Co	71.335	03/29/88
143	0231001	Lodi Water Department	79.900	03/08/88
144	1603001	Haledon Water Department	120.625	01/27/88

NOTE: The four quarter average represents NJDEP's most recent data for each purveyor. In most instances, these are the last three quarters of 1987 and the first quarter of 1988. For most purveyors, four samples were reported each quarter. For others, from 1 to 12 samples may have been reported. All samples reported were averaged. The raw data and averages provided by NJDEP are included in appendix C. This table was copied directly from NJDEP supplied information and reflects the number of significant digits of the THM data are as reported.

(15)

and responsibly reported. Hence, it is believed that formulating regulatory decisions based on this data is reasonable.

Table 2-1 shows that one purveyor exceeds the present TTHM limit of 100 mcg/l. Four purveyors (3 percent of total) fall into the 60 to 80 mcg/l range. Six purveyors (4 percent) fall into the 50 to 60 mcg/l range. Eight (6 percent) fall into the 40 to 50 mcg/l range. Eleven (8 percent) fall into the 20 to 40 mcg/l range. Eleven (8 percent) fall into the 10 to 20 mcg/l range. Ten (7 percent) fall into the 5 to 10 mcg/l range. And the remainder, 93 (64 percent) fall into the below 5 mcg/l range.

2.2 THM SURVEY QUESTIONNAIRE

To facilitate the study of THM occurrence in New Jersey drinking water, NJDEP's Bureau of Safe Drinking Water and Camp Dresser & McKee Inc. (CDM) jointly prepared a survey of all surface water purveyors and a selected number of ground water purveyors in New Jersey. The survey questionnaire requested information on each purveyor's background, past THM analytical data (which was compiled into a representative database), watershed areas, water quality, treatment processes, finished water quality, and capability of each purveyor to meet more stringent maximum contaminant levels (MCL). A copy of a blank survey questionnaire is included in appendix D.

The survey was mailed in July 1987 to approximately 90 water purveyors, of whom about 30 were surface water suppliers. The remaining 60 surveys were sent to selected ground water purveyors or bulk purchasers. Most purveyors responded by answering the questionnaire or by providing additional data on THMs.

Thirty-six purveyors also provided THM data with their survey forms. This information was used to augment NJDEP's existing THM database. It also provided purveyors the opportunity to express the results of their specific working experience as well as problems they are having with THM control, their concerns about the possible new regulatory framework, and their understanding of the technologies available for THM control. The survey

also provided helpful data on the ability of various treatment processes used by New Jersey water purveyors to prevent or remove THMs.

Analysis of the Maximum Quarterly results of the survey database is provided in table 2-2. These results were tabulated for comparative purposes only. Because chloroform is usually the largest component of total trihalomethanes (TTHM), the level of chloroform present serves as a convenient indicator of the ability of a purveyor to meet the suggested compliance level of 5 mcg/l for any single THM. Thus, the table indicates the level of chloroform present as a percentage of TTHM. A higher percentage translates into a more difficult treatment problem. On the average, chloroform makes up 82 percent of the TTHMs, with a standard deviation of 15 percent. For 35 of the 36 reporting purveyors, chloroform levels during the maximum quarter exceeded the suggested 5 mcg/l level.

The database generated from the survey must be used with caution. The data was provided voluntarily, thus, it may not be as reliable statistically as the original NJDEP THM database. Data was provided for different time periods, ranging from 1983 to 1987, and some purveyors provided results of many more samples than did others.

The maximum quarterly THM averages are not necessarily representative of existing concentrations because they were developed from measurements made over a variety of different time periods. They also represent concentrations in the past, under treatment conditions in use at that time.

It can be seen that some of the maximum quarterly averages exceed the present 100 mcg/l limit. Fully 33 of the 36 maximum concentrations exceed the suggested 20 mcg/l level for TTHMs.

It is important to note that these levels represent the lowest performance for these purveyors during the reporting period. In addition, most of the data comes from samples collected in the past. These and other correlations will suggest monitoring strategies as well as compliance strategies to protect sensitive populations or to initiate changes in treatment or distribution operations. A cursory examination of the two databases indicates anomalies that need further explanation.

TABLE 2-2

THM SURVEY DATABASE
MAXIMUM QUARTERLY AVERAGE RESULTS TOTAL THM AND CHLOROFORM

Rank	Purveyor ID	System name	Sample date	TTHM (mcg/l)	Chloroform (mcg/l)	Chloroform as % of TTHM
1	1511001	Jackson Twp MUA	85/05/29	4.350	4.350	100%
2	0514001	Wildwood W Dept, City of	83/03/10	13.550	6.550	48%
3	1516001	Little Egg Harbor Twp MUA	86/09/03	14.412	NA	NA
4	1918005	Sparta Twp Water Sparta Hills	82/11/17	26.900	9.500	35%
5	1216001	Perth Amboy Dept of Munic Util	84/06/07	27.500	27.500	100%
6	1431001	Pequannock Twp Water Dept	85/06/11	29.440	25.000	85%
7	1005001	Clinton Water Department	85/02/14	36.375	34.750	96%
8	1225001	Middlesex W Co	84/05/15	37.037	29.500	80%
9	1708001	Pennsville Twp W Dept	86/08/27	38.833	NA	NA
10	0221001	Garfield W Dept	86/06/05	39.155	26.517	68%
11	0322001	Moorestown Water Dept	85/10/15	43.000	30.000	70%
12	1601001	Bloomingdale Water Department	87/06/10	44.665	37.285	83%
13	0713001	Montclair Water Bureau	87/04/22	44.750	40.000	89%
14	1215001	North Brunswick Water Dep.	86/09/18	45.000	36.775	82%
15	1204001	East Brunswick Water Dep.	84/06/08	49.600	39.675	80%
16	1017001	Lambertville W Co	86/04/24	52.275	48.000	92%
17	0906001	Jersey City Water Department	84/05/10	52.917	44.783	85%
18	1811001	Manville W Department	84/07/17	55.000	55.000	100%
19	1613001	N.J.D.W.S.C. Wanaque North	85/07/03	58.682	46.512	79%
20	2013001	Rahway Water Department	85/09/24	63.750	32.750	51%
21	1214001	New Brunswick W Department	86/09/04	64.000	52.750	82%
22	1614001	Wayne Twp Division of Water	87/06/09	70.375	63.197	90%
23	0102001	Atlantic City MUA	84/06/18	79.625	NA	NA
24	1808001	Franklin Twp Dep. Public Works	86/08/27	82.675	75.250	91%
25	1223001	South River Water Department	85/03/01	85.000	85.000	100%
26	1111001	Trenton Water Department	85/07/22	85.500	NA	NA
27	0721001	West Caldwell W Department	86/11/21	90.225	76.225	84%
28	1605002	Passaic Valley W Comm	87/08/11	95.542	75.275	79%
29	1345001	NJ American W Co Monmouth Sys	86/08/20	105.25	92.330	88%
30	0714001	Newark Water Department	86/11/25	107.340	NA	NA
31	0238001	Hackensack Water Co	84/11/15	110.875	89.571	81%
32	0305001	Burlington City W Dept	85/06/13	111.750	90.750	81%
33	0231001	Lodi Water Dept	87/06/08	113.815	71.542	63%
34	0712001	NJ American W Co Short Hills	85/08/14	149.500	128.750	86%
35	1906002	Franklin Board of Public Works	86/09/17	195.500	180.000	92%
36	1403001	Butler Water Department	85/09/04	227.250	210.000	92%
					Average	82%
					Standard Deviation	15%

NOTE: NA = data not available.

The number of significant digits of the data are as computed and reported by NJDEP and do not necessarily reflect the accuracy of the originally reported data. Sample date is the day on which the samples (usually four) were taken for that quarter. The database consisted of approximately 15,000 data entries.

(28)

At present, the analysis of chloroform as a percentage of total THM is only available for the maximum quarter in the survey database. However, reasoning that these percentages will remain consistent for a given purveyor using the same treatment process, it is possible to use the most recent four-quarter TTHM averages shown in table 2-2 to estimate the level of chloroform for each purveyor.

2.2.1 GENERAL OBSERVATIONS ON THE THM SURVEY RESPONSES AND DATABASE

Ideally, the survey forms would be used to correlate treatment practices, types of watershed, and raw water characteristics with THM levels. This information would then be used to provide generalized guidance on THM control to water purveyors. Because the existing data is not adequate for this purpose, NJDEP is using the survey data only to provide specific information on a case-by-case basis. It is possible that future work will be undertaken by NJDEP to gather sufficient data to provide this kind of generalized guidance to purveyors on THM formation and control. Nevertheless, several general observations were made from the questionnaire responses and THM data.

On a statewide basis, chloroform concentrations were approximately 75 percent of TTHM levels. Almost all surface water supplies exceeded the 20 mcg/l TTHM level, but most ground water supplies did not. Only two supplies appeared to be having trouble meeting the current MCL of 100 mcg/l TTHM.

Generally, bulk purchase suppliers do not appear to exhibit a definite increase or decrease in THM levels compared to the THM levels in the supplying systems. However, the only system identified as prechlorinating a purchased water supply (West Caldwell Water Department) did exhibit higher THM concentrations than the supplier (Jersey City Water Department). THM concentrations typically were 1.5 to 2.0 times the concentrations reported by Jersey City Water Department during the same week.

Based on data from the three surface water purveyors reporting use of free chlorine for prechlorination only, a correlation was drawn between pre-

chlorination and elevated TTHM levels in the finished water. Those purveyors reported averaged TTHM values ranging from 70 mcg/l to over 100 mcg/l.

If excessive chlorine is added during prechlorination to maintain a system residual, excessive THM formation may result. Under these circumstances, the ability of downstream processes -- coagulation, flocculation, sedimentation, filtration -- to reduce THM formation is diminished.

Of the seven surface water purveyors reporting use of free chlorine for both prechlorination and post chlorination, no correlation could be drawn between these practices and THM levels. The reported TTHM values ranged from 30 mcg/l to 90 mcg/l.

Of the one surface water purveyor reporting use of free chlorine for post-chlorination only, the reported average TTHM level (40 mcg/l) was generally lower than the values reported by other surface suppliers that prechlorinate.

Of the purveyors that blend surface and ground water, the one that prechlorinates only reports an average TTHM concentration of about 60 mcg/l. Three other purveyors that both prechlorinate and postchlorinate report average TTHM concentrations ranging from 25 mcg/l to 40 mcg/l. The one purveyor that only postchlorinates reports an average TTHM concentration of about 40 mcg/l.

Although use of alternate disinfectants is not widespread in New Jersey, many suppliers indicated they would consider the use of ozone, chlorine dioxide, and chloramines in order to meet lower THM standards. Few purveyors currently use alternate disinfectants. Two purveyors feed chlorine and chlorine dioxide to the raw water. One feeds chlorine dioxide to the finished water. These three purveyors have not achieved a TTHM level below 50 mcg/l. Two other purveyors who currently use chloramines for residual disinfection report average TTHM concentrations between 25 mcg/l and 70 mcg/l.

Two purveyors reported in the survey that modifications to prechlorination practice reduced TTHM levels to below 50 mcg/l. One purveyor reportedly lowered TTHM concentrations by reducing free chlorine and lowering the pH throughout the plant. At one water treatment plant, elimination of prechlorination reduced TTHM levels from about 750 mcg/l to about 30 mcg/l. A study was conducted in May of 1979 on alternate treatment processes for the highly colored stream water used as a source. Chlorine dioxide was used as a predisinfectant, but the THM levels continued to exceed 100 mcg/l. This plant discontinued its prechlorination practices as an outcome of this 1979 study.

Surface water purveyors' use of activated carbon is primarily limited to the powdered activated carbon (PAC) form. Only two suppliers who reported data use granular activated carbon (GAC). No correlation could be made between the use of PAC and THM concentrations. The Bureau of Safe Drinking Water records indicate that at least three other pureyors use GAC either for taste and odor control or for volatile organics reduction.

In these instances where no clear correlation can be made between treatment processes and TTHM levels, additional work needs to be done to determine the significance of sources, precursor levels, pH, temperature or time. Existing models relating these factors to TTHM may be utilized in addition to more discrete sampling programs. In some systems, the techniques for reducing TTHM will necessitate more complicated strategies than eliminating prechlorination. Where treatment systems utilize chlorine dioxide or chloramines, the TTHM production in these processes may have to be investigated.

2.2.2 PURVEYORS PLANS FOR THM CONTROL

To control the formation of THMs a few purveyors responded that they would consider improving their physical treatment processes for better precursor removal. Many responded that they would consider ozone and chlorine dioxide as alternate disinfectants and chloramines as an alternate post disinfectant. Very few respondents exhibited any knowledge of the costs associated with the implementation of THM prevention or removal practices.

Three purveyors have completed or now have under way pilot studies to measure the effectiveness of alternate disinfectants. Hackensack Water Company has completed ozone pilot studies and has constructed an ozone treatment plant and New Jersey American Water Company, Short Hills and Brick Township Municipal Utilities Authority are conducting chlorine dioxide studies.

2.3 THM PRODUCTION AT FIVE WATER TREATMENT PLANTS

This report is presented as part of the New Jersey Special Water Treatment Study - Phase II (SWTS-II). The following is a summary of the data analysis concerning THMs that was presented in the SWTS-II Final Report (Camp Dresser & McKee 1988).

Water sampling was conducted at five public community water treatment plants -- two treating surface water and three treating ground water -- for organic contaminants and related parameters in 1985 and 1986. Schematic flow diagrams of the five plants and tables of the analysis data are provided in appendix E.

Samples were taken sequentially from the beginning of each plant to the end in an attempt to take samples from the same water as it entered and exited each treatment process. This method of sampling minimized the effects of variable water quality on the performance of the unit processes.

An attempt was made to ascertain the effect of seasonal variations on the observed THM levels. Sampling events were conducted at the surface water plants in the winter, late summer, and late fall during a storm. Two of the three ground water treatment plants were sampled in both the winter and later summer. In particular, in the late fall when the leaves are on the ground, it was expected that the THM precursors would be highest. The results of the sampling show the character of THM formation and removal in water treatment plants.

For evaluating process effectiveness in removing organic contaminants, and for identifying locations where THMs are generated or removed, samples at each plant were taken from the following locations (where applicable):

- Raw water sampling prior to fine screening by traveling screens (for surface water plants), to establish water quality entering the plant
- Raw water sampling following the traveling screens (for surface water plants), to determine how much of the volatile organics are removed by the traveling screens
- Treated water sampling after addition and mixing of pretreatment chemicals, to determine changes in chemical quality of the raw water, particularly formation of THMs caused by prechlorination
- Settled water sampling after flocculation/sedimentation, to detect any removal of organic precursors (which generate THMs as a result of chlorination) and organic compounds associated with the flocs and colloidal substances
- Filtered water sampling at the filter effluent line, to measure removal of organic compounds that may be attached or adsorbed to the suspended solids removed by the filter media
- Postchlorinated water sampling after addition and mixing of chlorine with treated water (and after sufficient detention to allow formation of THMs when dissolved organics react with chlorine), to measure THM formation
- Aerated water sampling following the aerators, to detect removal of any portion of the volatile organic compounds present in the water
- Adsorbed water sampling following GAC filtration, to detect removal of organic compounds and reduction of contaminant peaks

The data from the sampling program was reviewed for confirmation of expected removal or generation of volatile organics. The most notable aspect of volatile organic generation and removal at surface water treatment plants is the effect chlorination has on the generation of trihalomethanes.

Trihalomethanes were generally not detected in the treatment process train, except following chlorination. The sampling data confirmed that the trihalomethane formation potential (THMFP) is generally lower following sedimentation. Therefore, the approach to THM control that has been taken by many water purveyors is appropriate. Essentially, this approach consists of relocating the point of predisinfection from the intake of the plant to the point immediately following sedimentation, and then adding chlorine at a point of lowered THMFP.

There is evidence of trihalomethanes in raw surface waters. This may be evidence that wastewater has been previously chlorinated and discharged to the surface water. However, the low levels found in the raw water (minimum detection levels are 1.4 mcg/l) are negligible compared to the levels generated by the use of chlorine in the water treatment process.

Of the various organic contaminants found in the ground water purveyors' raw water supplies, chloroform was the only trihalomethane detected. It was found in one sample at 1.76 mcg/l. THM levels in raw ground water appear to be nonexistent or at inconsequential levels.

Trihalomethane concentrations in the finished water at the two surface water treatment plants were found to be lower in the winter, around 40 mcg/l, highest in the summer, up to 150 mcg/l, and an average of these results following a fall storm.

The following observations can be made based upon the data generated from the sampling episodes:

- Trihalomethanes and their precursors were low in the winter, and higher during the summer and following a fall storm, as expected.
- Trihalomethane precursors were found to be removed by nearly all unit processes but to varying degrees.
- The most significant reductions in trihalomethane precursors were generally found earlier in the treatment system, where the major removal of organic solids and other dissolved and

suspended materials occurred. Typically, this reduction occurs at the influent screens or during the passage of water through the flocculation/sedimentation basins.

Trihalomethane Formation Potential Test Procedure

Samples collected for THMFP analysis were spiked with sodium hypochlorite at the time of sample collection. The equivalent free chlorine residual was approximately 90 mg/l. The objective of this very high dose of chlorine was to insure that there was sufficient free chlorine in the sample for complete conversion of all precursors to THM. The pH of the samples was adjusted to 7.5 and the samples were maintained at 20 °C for 5 days prior to submission to NJDEP's Bureau of Environmental Laboratories for GC/MS analysis.

The testing indicated that TTHMFP tends to be reduced by every unit process in the treatment plant. TTHMFP removal by conventional treatment from raw water to finished water was found to be in the range of 30 to 50 percent. The most significant removals occurred at the flocculation/sedimentation step and at the filtration step, in that order.

Nonspecific Parameters. In addition to sampling for priority pollutants (including trihalomethanes) and conventional parameters (metals, inorganics, pH, and others) sampling of potential nonspecific or surrogate parameters was performed. In particular, analysis of each sample for total organic halides (TOX), purgeable organic halides (POX), total organic carbon (TOC), and nonvolatile total organic carbon (NVTOC) was performed.

TOX and POX were reviewed because of their possible application as surrogates for trihalomethanes. However, as with all surrogates, any relationship to a specific parameter must be established on a site-specific basis. For example, at one surface plant it was found that, under most circumstances, total THMs represent approximately 10 to 30 percent of TOX. At the other surface water treatment plant, this surrogate relationship was less well identified. The results of the sampling there showed a marked increase in both TOX and THMs at the point of predisinfection. However,

the results also showed that, whereas THMs increased through the treatment process, TOX tended to decrease moderately. This observed difference may be caused by use of GAC for organics removal at this plant.

Monitoring of purgeable organic halides (POX) is an analytical method designed to measure the volatile portion of TOX. It has also been identified as a potential surrogate for THMs. In this study, POX did not show a consistent relationship to TOX. As previously mentioned, TOX appears to be a surrogate for THM generation, but not THM removal. POX appears to show a similar relationship to THMs, but not as marked a one.

2.4 ANALYSIS OF THE SPECIAL WATER TREATMENT STUDY - PHASE I WATER QUALITY DATABASE

Extensive water quality analyses were compiled and presented in tables in the New Jersey Special Water Treatment Study - Phase I (SWTS-I) report (James M. Montgomery, Inc. 1983). The data consists of organic contaminant analyses obtained from 1979 through 1982 from various nationwide, statewide and purveyor-specific studies. The results specific to THM analysis are presented below.

The small number of grab samples taken at each plant for each study constrains evaluation of the extent of organic contamination in any given supply. Statistical analysis of the data was not warranted for this reason. Furthermore, no comparison could be made in regard to treatment process alternatives because the treatment process components were not described in this report.

A study conducted by the NJDEP Bureau of Potable Water and the Office of Cancer and Toxic Substances Research (BPW/OCTSR) between 1978 and 1980 on raw and finished water reported detectable levels of THMs in the finished water in 17 of the 20 treatment plants sampled that used both ground and surface water. Between one and three grab samples were taken from each supply. Low concentrations of THMs were found in some untreated ground and surface waters, but higher concentrations were found in treated water. The

treated water from surface supplies typically had TTHM averages between 6 mcg/l and 70 mcg/l, which correlates well with the THM survey data collected as part of this study. The treated ground water supplies typically had TTHMs around 2 mcg/l.

The SWTS-I report included data obtained from a 1982 EPA Region II survey of the finished water from 14 treatment plants (both ground and surface) throughout New Jersey. For most supplies, one grab sample was taken in 1980 and one in 1981. The survey was conducted through personal communications. The THMs were the primary organic compounds reported from this survey. Total THM levels in the treated surface water supplies typically ranged from 25 mcg/l to 60 mcg/l, which is consistent with other databases. The treated ground water supplies showed levels between zero (nondetectable) and 21 mcg/l. In addition, a 1982 EPA National Ground Water Survey reported treated water total THM results for three of the largest 25 New Jersey purveyors. These levels varied from nondetectable to 17 mcg/l.

Finally, an NJDEP public water system inventory compliance database for purveyors serving more than 75,000 persons provided quarterly TTHM results for 10 supplies over a two-year period (1981 through 1982). Since some purveyors missed reporting for some quarters, there was not enough data to establish a running yearly average for all purveyors. However, running averages were computed where possible. The total THM averages for these surface water purveyors ranged between 30 mcg/l and 166 mcg/l. Only one ground water purveyor reported TTHM data, and this data showed a maximum concentration of 2 mcg/l.

2.5 SUMMARY

THMs have been detected in virtually all treated water in New Jersey. From the data analyzed for this report, it appears that surface water purveyors in New Jersey that use chlorine for disinfection have historically produced water with total THM levels that fall primarily within the 40 mcg/l to 70 mcg/l range. Those purveyors that moved the point of prechlorination from points closer to the plant intake to points farther downstream through the

treatment process, or eliminated prechlorination altogether, have been successful in reducing THM levels. Many purveyors have indicated that they will consider use of alternative disinfectants if more stringent THM regulations are promulgated. THM levels in treated ground water have generally been very low, below 10 mcg/l.

Additional analysis is required before determining the number of purveyors to be affected by a change in MCL regulations. Furthermore, the additional analysis must be site specific to determine the significant factors such as pH, temperature, time, precursors or chlorine residual that may be altered to achieve the desired goal.

(Special_WaterII/9)

Section 3

3.0 ALTERNATIVES TO CHLORINATION

Four alternatives to chlorine have been used: ozone, chlorine dioxide, chloramines, and potassium permanganate. These chemicals can be used in place of chlorine, and in various combinations with chlorine and with each other. Although alternatives to chlorination can substantially reduce or eliminate formation of trihalomethanes (THM), their use also can result in formation of potentially undesirable, although currently unregulated, by-products other than THMs. Potassium permanganate has not been as widely used as the other alternative disinfectants.

3.1 OZONE

3.1.1 CHEMICAL AND PHYSICAL PROPERTIES

Ozone (O_3) is a molecular form of oxygen consisting of three oxygen atoms. It is relatively unstable, particularly in aqueous solutions, where it quickly degrades to the common molecular form (O_2) or reacts with other materials in the water. The half-life of ozone in the atmosphere can range up to 12 hours, but humidity decreases its stability. In aqueous solutions, however, the half-life of ozone is rarely greater than 30 minutes. Thus, ozone does not form a long-lasting residual in water.

Ozone is toxic. Short-term exposure at concentrations in the air of up to 1 part per million (ppm) is, apparently, nonsymptomatic. However, the federal government has set an enforceable standard that limits ambient ozone in the air to 0.12 ppm, or 235 micrograms per cubic meter (mcg/m^3).

In water, ozone has a very strong oxidizing effect, greater than that of chlorine. It readily reacts with many inorganics and organics, and can be used to eliminate odor, taste, and color in water supplies. It does not form trihalomethanes, although other by-products can be formed.

Ozone can also be used to oxidize and remove dissolved metals in water. For example, it acts to oxidize soluble ferrous iron into ferric iron,

which then hydrolyzes to form insoluble particulates. It also oxidizes soluble manganese to insoluble manganese dioxide. If overdosed, however, it can further oxidize manganese dioxide to permanganate, a soluble, pink-colored form of manganese that is a strong oxidizer itself. Permanganate should not be allowed to enter a distribution system. It will color the water in the distribution system, and it will reduce to manganese dioxide, a brown precipitate that can stain household fixtures and laundry.

Disinfection Properties of Ozone

In comparison to free chlorine, chlorine dioxide, chloramines, and potassium permanganate, ozone is widely considered to be the most efficient biocide. Since it is such a powerful and unstable disinfectant, limitations on sampling times and ozone measurements make it difficult to obtain good numerical results for comparison of ozone to the other disinfectants (Hoff and Geldrich 1980). Nevertheless, its powerful disinfectant properties have been demonstrated. A greater than 99.999 percent reduction of E. coli has been achieved with a 10-second contact time and an initial ozone concentration of 0.38 milligrams per liter (mg/l) (Sproul et al. 1979).

Use of ozone for disinfection is widely practiced in France. There it was established that viral deactivation of poliomyelitis virus by ozone was 99.9 percent complete when a dissolved ozone residual of 0.4 mg/l was detected after 4 minutes of contact time. The French government has adopted this concentration and contact time as a minimum standard for ozone treatment (Rice et al. 1981).

Several factors -- contact time, level of ozone residual, temperature, alkalinity, and pH -- can affect the efficiency of ozone disinfection. A United States study revealed that a tenfold decrease in the contact time necessary for 99 percent deactivation of the polio virus could be achieved by doubling the residual ozone (Roy et al. 1982). An approximate twofold decrease in resistance of the polio virus was observed by increasing the temperature from 5° C to 10° C. While it is known that the polio virus is more resistant to deactivation in acidic solutions than in neutral or basic solutions, the magnitude and type of effect that pH changes have on the

efficiency of ozone disinfection are specific for each organism. It has been reported that Giardia muris cysts were slightly less resistant to ozone at pH 7 than at pH 5, and nearly one-and-a-half times less resistant at pH 9 than at pH 5 (Wickramanayake et al. 1984). Thus, it is important to adjust ozone dosage based on the pH and temperature conditions needed to achieve a particular level of disinfection.

3.1.2 PRACTICAL CONSIDERATIONS

An ozone generator (ozonator) incorporates a series of electrodes mounted in a gas-tight container (figure 3-1). Most ozonators consist of a series of horizontal tubes in a sealed container. Each element of the ozonator consists of two tubes, one inside the other. The source gas, either dried air or pure oxygen (O_2), is passed into the generator and through a narrow gap separating two electrodes. A glow (corona) is produced in the gap. The resulting product is an ozone-bearing gas usually containing up to 6 percent ozone by weight. Using air as the source gas, the typical ozone concentration in the product gas is 1.5 to 2 percent. Using pure oxygen, the typical concentration is 3 to 6 percent.

Ozone from the generator feeds diffusers in a contact tank. As ozone bubbles rise through the ozone contact tank (figure 3-2), up to 98 percent ozone transfer to the water is possible, depending on water quality and the applied dosage. This occurs because ozone is highly soluble in water, up to 13 times more soluble than the O_2 molecular form. A certain amount of ozone, however, passes through the water column and collects as "off-gas" in the upper portion of the ozone contact tank. The ozone is then destroyed prior to venting to the atmosphere. Ozone destruction equipment can utilize either direct thermal or catalytic processes to convert the off-gas ozone to oxygen. Off-gas fans are generally used to provide a slight negative pressure in the top of the ozone contact tanks, enabling the tanks to be thoroughly exhausted.

Many operational and performance factors need to be considered in generating and using ozone (Renner and Rakness 1984). The most significant include:

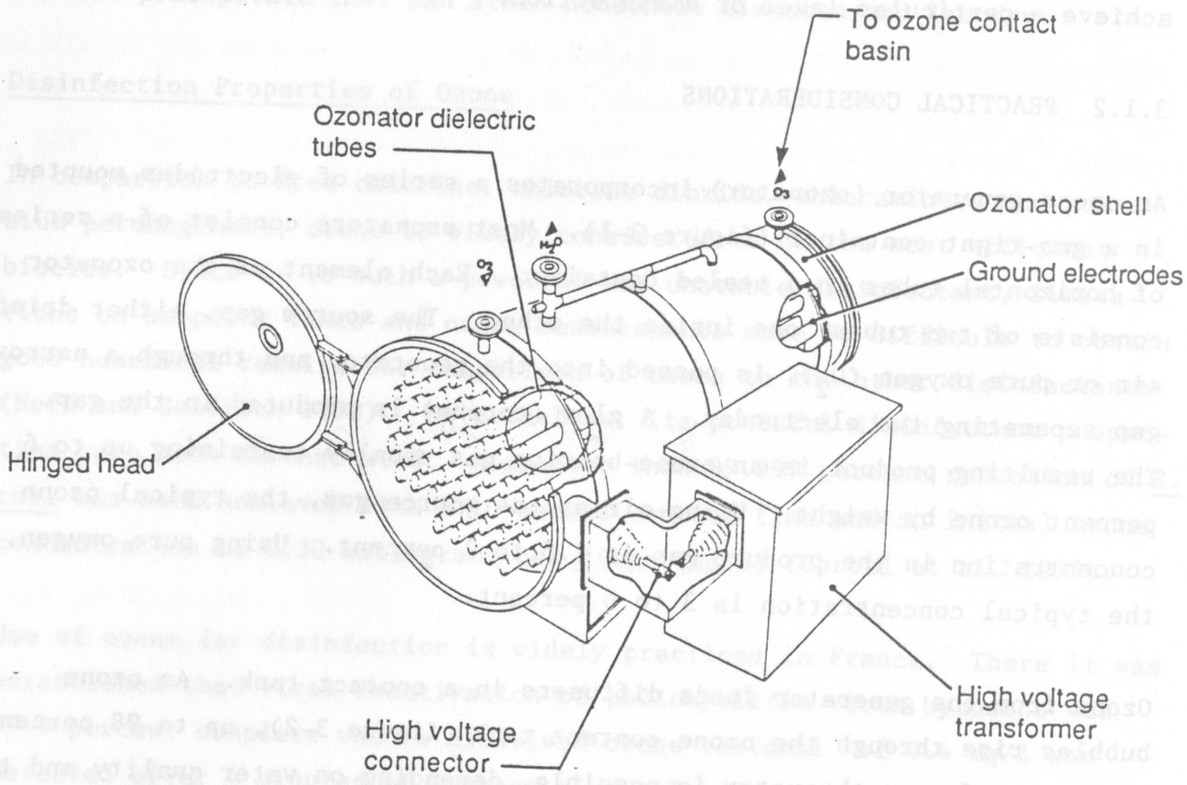

CDM
environmental engineers, scientists, planners & management consultants

Figure 3-1

Typical Ozone Generator

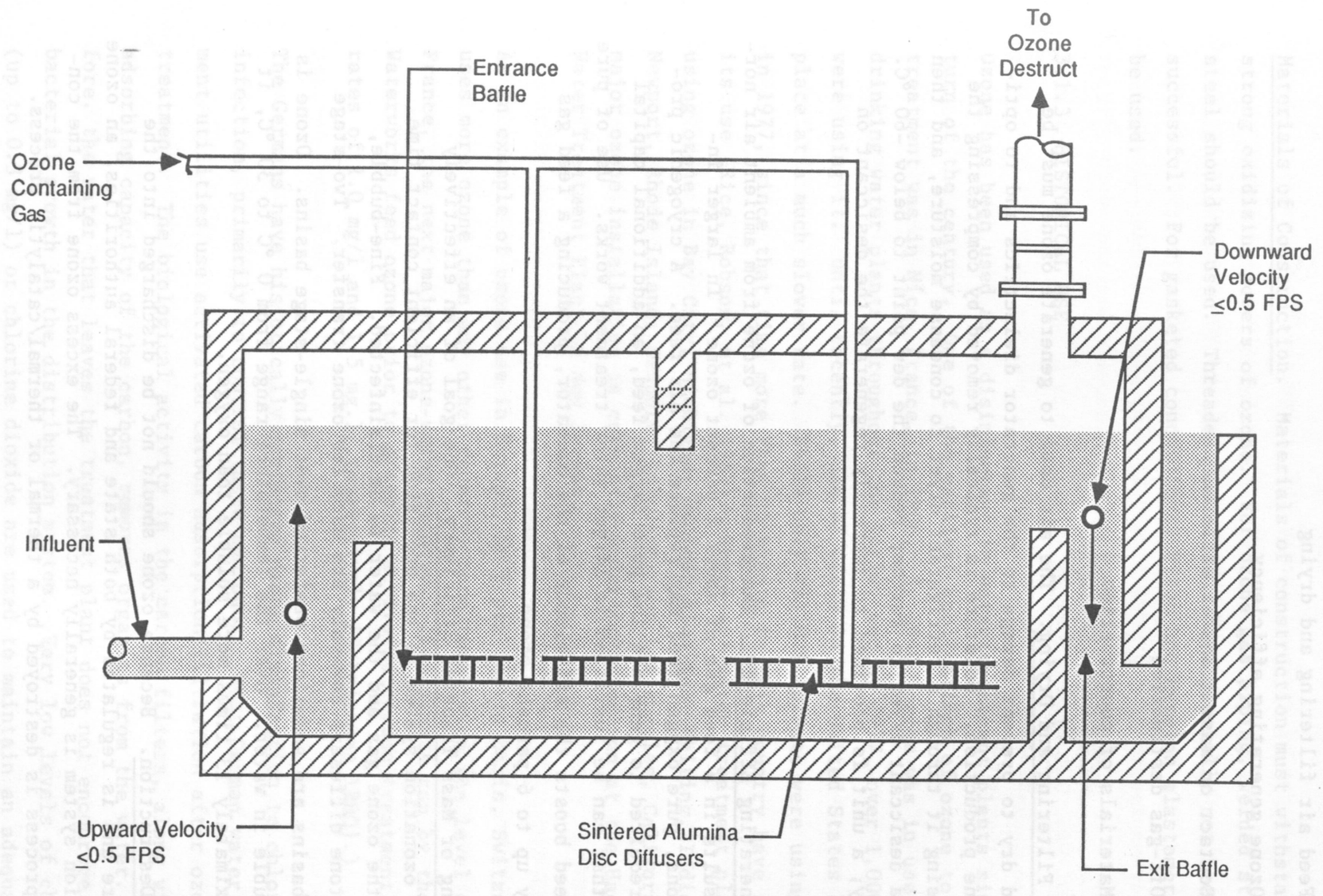

CDM

environmental engineers, scientists,
planners & management consultants

Figure 3-2

Typical Ozone Contactor

- o Feed air filtering and drying
- o Ozone generating efficiency
- o Contact or mass transfer efficiency
- o Off-gas destruction
- o Materials of construction

Feed Air Filtering and Drying. The air used to generate ozone must be clean and dry to prevent damage to the generator dielectrics and to optimize ozone production. Moisture is typically removed by compressing the air, passing it through a refrigerant dryer to condense moisture, and then through a desiccant dryer to further reduce the dew point to below -60 °C. Generally; a unit is provided to thermally regenerate the desiccant on site.

Ozone Generating Efficiency. The production of ozone from ambient air normally results in a feed gas of about 2 percent ozone. In larger installations, pure oxygen feed may replace the air feed. A cryogenic process is required to generate the pure oxygen feed, an additional capital expense that can be justified in larger water treatment works. Use of pure oxygen feed boosts the efficiency of the ozonator, producing a feed gas typically up to 6 percent ozone.

Contacting or Mass Transfer Efficiency. One goal of an effectively designed ozonation system is the provision for efficient contact time between the ozone gas and the water to be disinfected. Fine-bubble, porous-stone diffusers commonly are used for ozone transfer. Two-stage contact basins are sometimes preferred over single-stage basins. Ozone is very soluble in water. Over the temperature range from 0 °C to 30 °C, it is approximately 13 times more soluble than oxygen.

Off-gas Destruction. Because ozone should not be discharged into the atmosphere and is regulated by both state and federal authorities, an ozone destruction system is generally necessary. The excess ozone from the contacting process is destroyed by a thermal or thermal/catalytic process.

Materials of Construction. Materials of construction must withstand the strong oxidizing powers of ozone. For ozone gas piping, welded stainless steel should be used. Threaded connections have generally not been successful. For gasketed connections, Viton and Hypalon elastomers should be used.

3.1.3 HISTORICAL USE

Ozone has been used as a disinfectant in water treatment plants since the turn of the century. One of the earliest applications of ozone to water treatment was in Nice, France, in 1906. By 1940, ozone was in use at 119 drinking water plants throughout the world, and by 1977, over 1,000 plants were using it. Until recently, use of ozone in the United States has taken place at a much slower rate. While only two U.S. plants were using ozone in 1977, since that time more than 25 plants in this country have adopted its use (Rice, Robson, et al. 1981). There are water treatment plants using ozone in Bay City, Michigan; Monroe, Michigan; Whiting, Indiana; Newport, Rhode Island; Newport, Delaware; and Los Angeles, California. A major ozone installation is currently under construction at the Hackensack Water Treatment Plant in New Jersey.

As an example of ozone use in Europe, on a per capita basis, Switzerland uses more ozone than any other country, more than twice the level of use in France, the next major ozone-using country. (Two plants run by the Zurich Waterworks feed ozone prior to granular activated carbon treatment, at rates of 1.0 mg/l and 1.5 mg.l, respectively [Schalekamp 1980].)

The Germans have historically preferred ozone disinfection to chlorine disinfection, primarily to control taste and odor. Most German water treatment utilities use activated carbon adsorption/filtration after ozone treatment. The biological activity in the carbon filters, along with adsorbing capacity of the carbon, removes organics from the water. Therefore, the water that leaves the treatment plant does not encourage further bacterial growth in the distribution system. Very low levels of chlorine (up to 0.3 mg/l) or chlorine dioxide are used to maintain an adequate disinfectant residual in the distribution system (Kuhn et al. 1978).

The widespread use of ozone in Europe did not emerge from a general concern about THMs. The European practice of using ozone stems from the use of relatively low-quality surface waters. Therefore, where granular activated carbon (GAC) was used for taste and odor control, ozone was found to increase carbon longevity and performance (Miller et al. 1978). In addition, ozone was found under many circumstances to reduce taste and odors without the use of GAC.

3.1.4 APPLICATION TO REDUCTION OF THMs

Because ozone does not contain a halogen, treatment of source water with ozone does not produce THMs in normal water treatment practice; however, it is not clear under what circumstances ozone reduces or increases trihalomethane formulation potential (THFMP). In most cases, THMFP may be reduced by as much as 30 to 40 percent. This may be due to oxidation and stripping of precursors. Pilot studies conducted for the U.S. Environmental Protection Agency (EPA) on Cross Lake water in Shreveport, Louisiana, showed that ozonation of conventionally treated water (at 2 to 6 mg/l) removed 5 percent to 25 percent of the THMFP (Glaze et al. 1982). In some cases, however, THMFP in a source water is increased after ozone treatment. This occurs because ozone may oxidize organics into products that are more easily halogenated. If chlorine is added to water after ozone is added, the formation of THMs may be greater than if the water had not been ozonated at all. Therefore, the use of ozone alone as a means to reduce THMFP should be evaluated on a case-by-case basis.

Ozonation followed by GAC treatment was pilot tested at the Samuel Baxter plant in Philadelphia. It was shown that preozonation has no significant effect on GAC bedlife when breakthrough of synthetic organics present in the raw water is chosen as the limiting criterion (Neukrug et al. 1984). Thus, the addition of ozone between prechlorination and GAC is not an effective means for removing the THMs formed during the prechlorination step. However, when dissolved organic carbon (DOC) is used as a criterion, preozonation can increase GAC bed life.

Preozonation before GAC treatment lowers the organic loading rate onto the system (due to oxidation and stripping) and produces organics that are readily degraded by the bacteria located on the GAC. Therefore, the use of ozone followed by GAC usually results in a treated water with reduced THMFP because less DOC is present.

When the water is treated with ozone, coagulation has been aided in some treatment operating schemes by the destabilization of colloidal suspensions (Saunier et al. 1985). This effect is known as "microflocculation". Improved coagulation can enhance removal of large-molecular-weight organic precursors, resulting in lowered THM levels (Reckhow and Singer 1984). It has also been found that ozonation prior to carbon adsorption increases the useful life of the carbon for THMFP reduction between regenerations (see section 5.4 for further discussion).

At concentrations typically used in water treatment, ozone does not fully oxidize organic contaminants to carbon dioxide and water. Actually there is very little direct reduction in the total organic carbon (TOC), usually 10 percent or less. Partial oxidation results in heavier organic intermediates that may have the potential for forming THMs. Frequently, these ozonation products are also more easily metabolized by bacteria than were the original organic compounds. Therefore, a postdisinfectant residual should be maintained to prevent biological regrowth in the distribution system, especially if GAC or sand columns are not used to biodegrade the compounds produced by ozone.

When preoxidation is accomplished with ozone and postoxidation is accomplished with chlorine, chloroform is produced. The effect of preozonation on chloroform production appears to be somewhat pH-dependent. At pH values below 10, preozonation decreases the rate and extent of chloroform production. At pH values above 10, chloroform production is enhanced.

In the presence of naturally occurring bromide, bromoform levels may increase in finished water after ozonation. However, this is usually not of major concern because naturally occurring bromide occurs at low concentrations.

In some water treatment systems, chlorine is added to prevent clogging caused by bacterial growth in the filters. It is not clear whether ozone can be substituted for chlorine to prevent this growth.

In summary, ozone is a strong disinfectant. It can replace chlorine as the primary disinfectant in most drinking water treatment systems. However, since ozone does not leave a lasting residual, it must be used in conjunction with another disinfectant that will provide a residual in the distribution system. Ozone also can replace chlorine as an oxidizer of dissolved metals, and as a remover of color, taste and odor. Ozone generation systems and contacting basins are proven technology and are readily available.

Ozonation does not form THMs and, with further study, the conditions under which ozone reduces THMFP and prolongs GAC bed life will become better known. However, even after taking into account the possible large percentage reductions in THMFP by either ozonation, ozone-assisted coagulation, or ozone/GAC combinations, the very low New Jersey standard that has been suggested for THMs (20 mcg/l total THMs with no single THM exceeding 5 mcg/l) probably cannot be met if ozone is used in conjunction with chlorine as a residual disinfectant. Use of ozone as a main disinfectant/oxidant and chloramines as a residual disinfectant can probably meet the suggested standard.

3.2 CHLORINE DIOXIDE

3.2.1 CHEMICAL AND PHYSICAL PROPERTIES

Chlorine dioxide (ClO_2) is a chemical compound consisting of one atom of chlorine and two atoms of oxygen. It exists in the pure state as a free radical (a free radical is a reactive molecular species with an odd number of valence electrons). ClO_2 vapor resembles chlorine in appearance and odor.

In a water solution, ClO_2 is relatively stable. Exposure to ultraviolet light or high temperatures and pressures will cause ClO_2 to decompose to

hydrochloric acid (HCl) and chloric acid ($HClO_3$) in acidic solutions or chlorate (ClO_3^-) and chlorite (ClO_2^-) ions in alkaline solutions. Slight acidification of ClO_2 solutions (pH 6) enhances stability.

Chlorine dioxide gas is readily soluble in water. It does not react with water or ammonia, as does chlorine, and is quite volatile. Its solution color changes from green-yellow to orange-red as the concentration increases.

Chlorine dioxide is a strong oxidant. In comparison to chlorine, however, it is typically a weaker oxidant for treatment of drinking waters. Although chlorine dioxide has about 1.15 times the theoretical oxidation potential of chlorine, this oxidation potential is not usually realized at the pH ranges normally encountered in water treatment. In reaction with substances in water, chlorine dioxide is usually reduced to chlorite ion:

$$ClO_2 + e^- = ClO_2^-$$

Chlorite ion is also an oxidizer and will be consumed in oxidation-reduction reactions, although at a slower rate than chlorine dioxide (Aieta and Berg 1986). This reaction is:

$$ClO_2^- + 4\ H^+ + 4\ e^- = Cl^- + 2\ H_2O$$

Disinfection Properties

The strong oxidizing properties of chlorine dioxide makes it a good disinfectant. It is effective against bacteria, many protozoa, algae, and viruses (Aieta and Berg 1986).

When chlorine is dissolved in water, a combination of hypochlorous acid (HOCl) and hypochlorite ion (OCl^-) is formed. The relative concentration of each is dependent upon pH. Below a pH of 6, hypochlorous acid is dominant, while above a pH of 10, hypochlorite ion is dominant. Between a pH of 6 and 10, both species exist. This information is very important in

the treatment process because hypochlorous acid is believed to be 100 times more efficient than hypochlorite ion as a germicide.

Chlorine dioxide is comparable to hypochlorous acid when the pH is between 6 and 7, but it becomes a stronger biocide as the pH increases. As a virucide, however, chlorine dioxide is superior to hypochlorous acid. It should be noted that, as concentrations approach 1 mg/l and higher, chlorine dioxide and chlorine have a similar disinfecting potency, and they take a very short time to effect 99 percent deactivation.

3.2.2 PRACTICAL CONSIDERATIONS

Chlorine dioxide is always generated near the point of application because of chemical instability. Typically, the generation of chlorine dioxide involves the reaction between sodium chlorite ($NaClO_2$) and chlorine (Cl_2) (figure 3-3). The two chemicals are combined to form an aqueous solution. A product solution containing a high concentration of chlorine dioxide is then piped to the point of application. The oxidation process in which chlorine (Cl_2) reacts with a sodium chlorite ($NaClO_2$) solution is most commonly used in the generation of ClO_2:

$$2\ ClO_2^- + Cl_2 = 2\ ClO_2\ (gas) + 2\ Cl^-$$

Chlorate ion (ClO_3^-), an undesirable by-product, is also produced in a competing reaction:

$$ClO_2^- + Cl_2 + OH^- = ClO_3^- + H^+ + 2\ Cl^-$$

Sodium chlorate, and chlorite are undesirable by-products of chlorine dioxide production because of their toxicity. To minimize the formation of the chlorate ion, many chlorine dioxide generators use pH adjustment. The yield for chlorine dioxide generation is in the range of 80 to 95 percent, leaving between 5 and 20 percent of the reactant chemicals unreacted and remaining in the treated water. Hydrochloric acid (HCl) can be added to the reaction solution to maintain a pH between 2 and 3. Lower pH tends to increase the generation yield.

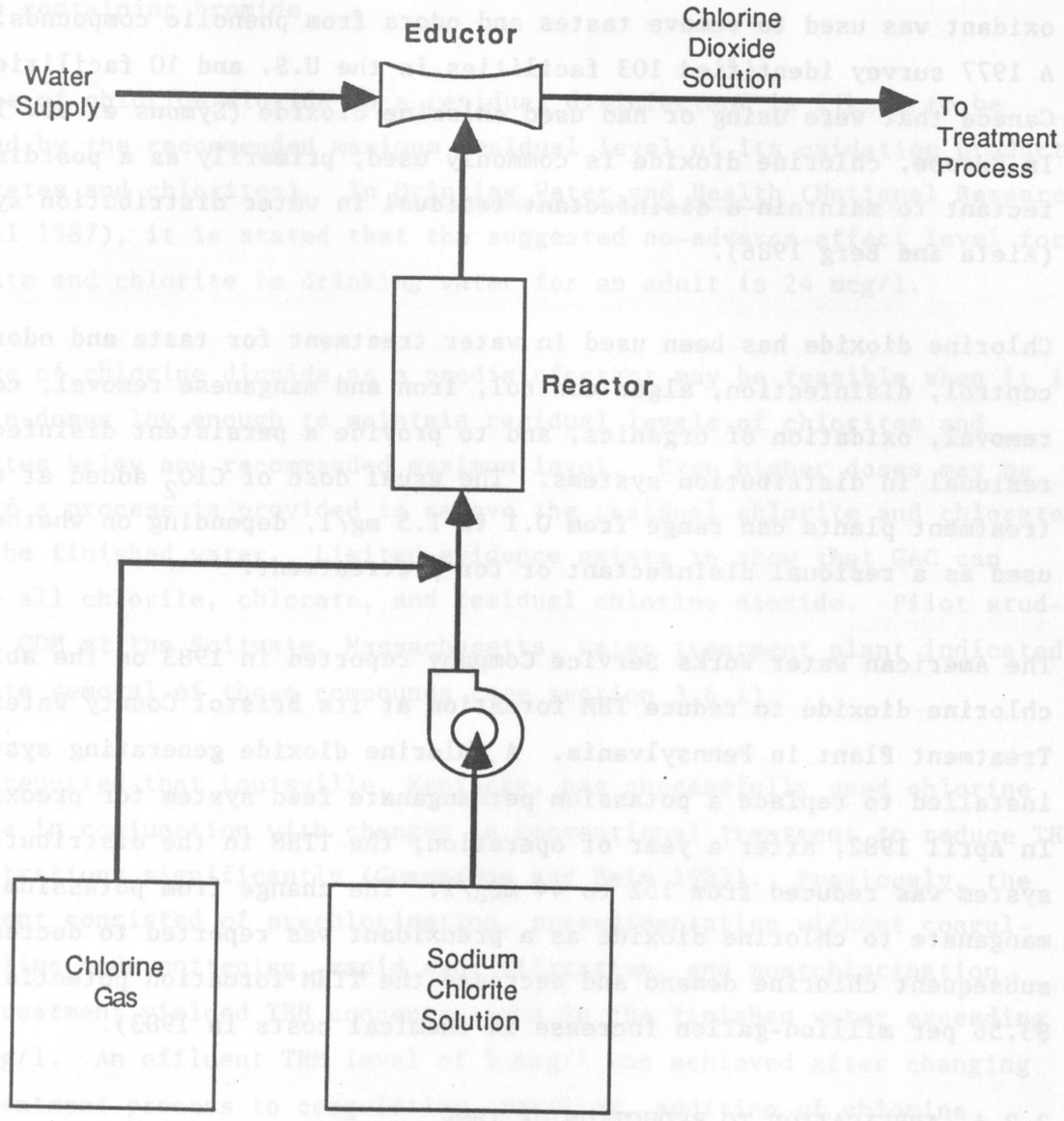

CDM
environmental engineers, scientists, planners & management consultants

Figure 3-3
Typical Process Schematic for Chlorine Dioxide Solution Generation

3.2.3 HISTORICAL USE

Chlorine dioxide was first used to treat drinking water in the United States at the Niagara Falls, New York, water treatment plant in 1944. The oxidant was used to remove tastes and odors from phenolic compounds. A 1977 survey identified 103 facilities in the U.S. and 10 facilities in Canada that were using or had used chlorine dioxide (Symons et al. 1979). In Europe, chlorine dioxide is commonly used, primarily as a postdisinfectant to maintain a disinfectant residual in water distribution systems (Aieta and Berg 1986).

Chlorine dioxide has been used in water treatment for taste and odor control, disinfection, algae control, iron and manganese removal, color removal, oxidation of organics, and to provide a persistent disinfection residual in distribution systems. The usual dose of ClO_2 added at water treatment plants can range from 0.1 to 1.5 mg/l, depending on whether it is used as a residual disinfectant or for pretreatment.

The American Water Works Service Company reported in 1983 on the ability of chlorine dioxide to reduce THM formation at its Bristol County Water Treatment Plant in Pennsylvania. A chlorine dioxide generating system was installed to replace a potassium permanganate feed system for preoxidation. In April 1982, after a year of operation, the TTHM in the distribution system was reduced from 152 to 44 mcg/l. The change from potassium permanganate to chlorine dioxide as a preoxidant was reported to decrease the subsequent chlorine demand and decrease the TTHM formation potential (at $3.56 per million-gallon increase in chemical costs in 1983).

3.2.4 APPLICATION TO REDUCTION OF THMs

Chlorine dioxide can be used in water treatment as a preoxidant for taste and odor reduction, for iron and manganese removal, for predisinfection before filtration, and for postdisinfection.

Chlorine dioxide does not react with organics in water to form THMs. Therefore, chlorine dioxide can effectively be used as a substitute for

chlorine to reduce THM in finished water. However, the unreacted portion of the chlorine can form a low-level free chlorine residual, which in turn can cause the formation of low-level concentrations of THMs. Also, Brominated THMs also may be formed when chlorine dioxide is used to treat waters containing bromide.

The use of chlorine dioxide as a residual disinfectant is likely to be limited by the recommended maximum residual level of its oxidation products (chlorates and chlorites). In Drinking Water and Health (National Research Council 1987), it is stated that the suggested no-adverse-effect level for chlorate and chlorite in drinking water for an adult is 24 mcg/l.

The use of chlorine dioxide as a predisinfectant may be feasible when it is used in doses low enough to maintain residual levels of chlorites and chlorates below any recommended maximum level. Even higher doses may be used if a process is provided to remove the residual chlorite and chlorate from the finished water. Limited evidence exists to show that GAC can remove all chlorite, chlorate, and residual chlorine dioxide. Pilot studies by CDM at the Scituate, Massachusetts, water treatment plant indicated complete removal of these compounds (see section 3.6.1).

It is reported that Louisville, Kentucky, has successfully used chlorine dioxide in conjunction with changes in conventional treatment to reduce THM concentrations significantly (Gummerman and Heim 1983). Previously, the treatment consisted of prechlorination, presedimentation without coagulants, lime soda softening, rapid sand filtration, and postchlorination. This treatment yielded THM concentrations in the finished water exceeding 100 mcg/l. An effluent THM level of 5 mcg/l was achieved after changing the treatment process to coagulation, settling, addition of chlorine dioxide (plus a small amount of free chlorine), addition of ammonia 10 minutes later (at the start of the softening basin), softening, rapid sand filtration, and postdisinfection with chloramines. The filtered water plate count was over 10 times greater than with free chlorine; however, the distribution system standard plate counts were equivalent, and no coliform were observed for either approach.

In laboratory investigations, chlorine dioxide has been shown to inhibit THM formation when mixtures of free chlorine and chlorine dioxide have been added as a postdisinfectant to coagulated, settled, and filtered water. Chlorine dioxide probably reacts with THM precursors and renders them unreactive.

3.3 CHLORAMINES

3.3.1 CHEMICAL AND PHYSICAL PROPERTIES

The term chloramine describes three molecular species: monochloramine (NH_2Cl), dichloramine ($NHCl_2$), and nitrogen trichloride (NCl_3) sometimes called trichloramine. Chloramines, formed from the reaction of chlorine and ammonia, contain atoms of nitrogen, chlorine, and hydrogen. Chloramines are also known as "combined chlorine."

Both dichloramine and nitrogen trichloride impart a chlorinous swimming-pool-like taste and odor to water.

Aqueous solutions of chloramines are formed by feeding chlorine and ammonia together into water or by adding chlorine to water already containing ammonia. When gaseous chlorine is dissolved in water, hydrolysis of the chlorine occurs rapidly, yielding hypochlorous acid (HOCl) and hydrogen and chloride ions:

$$Cl_2 + H_2O = HOCl + H^+ + Cl^-$$

In dilute solutions of pH greater than 3, the reaction proceeds to completion. A dissociation reaction occurs next:

$$HOCl = OCl^- + H^+$$

where the hypochlorite ion (OCl^-) is formed. This dissociation proceeds further at greater pH. Next, the hypochlorous acid reacts with the ammonia to form the three species of chloramines:

$$HOCl + NH_3 = NH_2Cl + H_2O$$

$$HOCl + NH_2Cl = NHCl_2 + H_2O$$

$$HOCl + NHCl_2 = NCl_3 + H_2O$$

Generally, the multichlorinated species predominate as the pH decreases and the chlorine-to-nitrogen ratio increases. However, in common water treatment practice, the monochloramine species predominates.

"Breakpoint chlorination" conditions exist after enough chlorine has been added to water to make the ratio of chlorine to ammonia nitrogen, by weight, exceed 7.6, and all chlorine demand in the water is satisfied. At this level of chlorine addition, all the ammonia will have been converted to nitrogen trichloride and subsequently oxidized to nitrate, nitrogen gas, and chloride ions. Beyond the breakpoint, no ammonia remains and all additional chlorine added can be detected as free chlorine residual. The goal of breakpoint chlorination is to destroy chloramines and create free chlorine residual, whereas the goal of disinfection with chloramines is to create a combined chlorine residual composed of monochloramine.

Disinfection Properties

Chloramine is not as strong a disinfectant as hypochlorous acid. The biocidal efficiency of chloramines decreases with increasing pH. The mono- and dichloramines have less disinfecting power and therefore require higher concentrations and/or longer contact times than chlorine to achieve equivalent disinfection levels.

Chloramines require 1,000 times more contact time than hypochlorous acid to obtain a 99 percent kill of E. coli at the same disinfectant concentration, whereas chloramines require 275 times more concentration than hypochlorous acid to effect the same kill within the same contact time (Faust 1987). Chloramines are characterized by the National Research Council (1980) as a mediocre bactericide and a poor virucide.

Disinfection with chloramines is strongly affected by pH and temperature. A 20 °C drop in temperature requires the contact time to be increased by a factor of 9 or the chloramine dose to be increased by a factor of 2.5.

Dichloramine is a better disinfectant than monochloramine, but when the dichloramine portion of all chloramines exceeds 20 percent, odor complaints are likely. A practical limit for dichloramine is 0.8 ppm based on odor and for monochloramine, 5.0 ppm.

3.3.2 PRACTICAL CONSIDERATIONS

The ammonia used to create chloramines can be derived from anhydrous ammonia (pure ammonia in a gaseous or liquid form), a 29 percent solution (aqua ammonia), or in powdered form as ammonium sulfate, $(NH_4)_2SO_4$. Anhydrous ammonia is normally added to water using equipment similar to that used for handling gaseous chlorine. Anhydrous ammonia is a gas at normal temperatures and pressures. Pressurized, liquid, anhydrous ammonia is the most commonly used source of ammonia for chloramination because of low cost and ease of handling. Aqua ammonia and ammonium sulfate solutions are added with equipment similar to that used for sodium hypochlorite and calcium hypochlorite, respectively.

Ammonia is highly soluble in water and can be added in a variety of ways including direct gas feed or by liquid feed through a diffuser.

3.3.3 HISTORICAL USE

Historically, chloramines have been used to reduce tastes and odors, to lower chlorine requirements, to eliminate biological aftergrowths in treatment and distribution structures, and to control THM formation.

Chloramines have been used as a disinfectant in drinking water treatment in the United States for 70 years. Chloramine treatment was very popular between 1929 and 1939, when there were 200 installations, many in the Midwest, for taste and odor control.

Since 1917 the Denver Water Department has used chloramines to control taste and odor, to disinfect, and to minimize aftergrowths in the distribution system. Denver maintains a 0.7 mg/l chloramine residual in the water leaving the plant. Historically, they have maintained a 4:1 chlorine-to-ammonia weight ratio. Denver's raw water has a very low bacterial count (Dice 1985).

The City of San Diego has used chloramines for disinfection since 1981. Two plants were modified to use chloramines as a postdisinfectant and one plant (the Otay Plant) was modified in 1984 to use chloramines as the primary disinfectant. Residuals were maintained at about 1.3 to 1.5 ppm at the Otay plant. Plant effluent THM was maintained below 10 ppb. For the period from August 1981 to mid-1983, the total TTHMs in the system were reduced from 160 mcg/l to 70 mcg/l.

Chloramines are used by the Miami-Dade Water and Sewer Authority in Florida. The bacterial quality of the raw water is very good, exhibiting low standard plate counts. The source water comes from shallow non-artesian wells in the Biscayne aquifer. The raw water has a free ammonia concentration in the range of 1.0 to 1.5 ppm and is generally hard. The treatment processes include lime softening, coagulation, settling, and rapid sand filtration. Chloramines are formed prior to settling. The desired monochloramine residual in the finished water is 3.0 to 3.5 mg/l. The concentrations of THMs in the distribution system have been maintained below 70 ppb. Biological quality has been as good as when breakpoint chlorination was practiced.

When the City of Topeka, Kansas, changed from breakpoint prechlorination (8 to 13 mg/l) and postchlorination (2 to 3 mg/l) to the practice of prechlorination (3.6 mg/l) followed by ammonia addition (after 2 to 3 hours) and postchloramine formation (2 to 3 mg/l), average THM concentrations were reduced 74 percent for finished water and 71 percent in the distribution system (Gummerman and Heim 1983). Additionally, the plate count and coliform reductions between raw and finished water sampling points did not change.

Chloramines are used at the Fairfax County Water Authority in Virginia. By 1980, chloramines were added as a postdisinfectant to finished water at all the Authority's treatment plants. Free chlorine was generally added between the settling and filtration processes. In the early 1980s, the Authority generally maintained system TTHM below 70 mcg/l. Chlorine/ammonia weight ratios used ranged from 3:1 to 5:1.

3.3.4 APPLICATION TO THE REDUCTION OF THMs

Chloramines do not form THMs when added to drinking water. However, chloramination does not entirely prevent the generation of THMs. During the formation reaction of chloramines in water, a small amount of free chlorine can interact with precursors to form THMs.

Because of chloramine's relatively weak and slow disinfecting action, its use as a primary disinfectant is not recommended. As a residual disinfectant, chloramines have been proven to provide a long-lasting and effective barrier against bacterial regrowth and to significantly reduce THM formation. However, there have been indications that some purveyors may need to give close attention to the monitoring and cleaning of distribution systems in order rapidly identify problem areas and prevent regrowth after conversion from a free chlorine residual to a chloramine residual.

The Huron, South Dakota, plant experienced a reduction in distribution system THMs from 154 mcg/l to 37 mcg/l after the point of chlorination was moved from the plant influent basin to a point past recarbonation, and then ammonium sulfate was added to produce chloramines. The distribution system total plate counts were reduced by 75 percent (compared to use of free chlorine) when use of chloramines was implemented (Gummerman and Heim (1983).

3.4 POTASSIUM PERMANGANATE

3.4.1 CHEMICAL AND PHYSICAL PROPERTIES

Potassium permanganate ($KMnO_4$) is an inorganic salt. It is available in powdered crystal form, which is stable in closed containers. In an aqueous solution, potassium permanganate dissociates into the potassium ion (K^+) and the permanganate ion (MnO_4^-), which gives the water a pink or purple color. The permanganate ion is a strong oxidizer. The manganese in the permanganate ion is reduced from a +7 to a +4 oxidation state during oxidation. In the pH ranges encountered in water treatment plants, the generalized permanganate reactions that permanganate undergoes are:

$KMnO_4$ + H_2O + organic compounds = oxidized organics + carbon dioxide + water + MnO_2

$KMnO_4$ + H_2O + soluble iron = ferric precipitate + MnO_2

$KMnO_4$ + H_2O + soluble manganese = manganese dioxide

$KMnO_4$ + H_2O + hydrogen sulfide = soluble sulfate + MnO_2

Manganese dioxide (MnO_2) is insoluble and can be removed through coagulation, settling, and filtration. Manganese dioxide can impart a brown color to water and will stain home laundry or household fixtures.

Disinfection Properties

Potassium permanganate has been used as a disinfectant, but its disinfecting properties are not widely reported or well studied. Cleasby et al. (1964) refer to reports of potassium permanganate's use to disinfect wells and surface water supplies and to aid in disinfection owing to the coagulating effect of the hydrous manganese dioxide floc formed when the permanganate is reduced. This floc may trap bacteria within as it forms, and remove the bacteria from the water as it is removed during filtration. Cleasby performed tests on potassium permanganate to determine its effectiveness as a disinfectant against Escherichia coli. Among their conclusions were the following: Between 0°C and 20°C, slightly greater kill is obtained at higher temperatures; a pH of 5.9 was fond to be much more effective than a pH of 7.4 or a pH of 9.2; and at a pH range of 5.9 to 7.4,

potassium permanganate concentrations of 4 to 16 parts per million (ppm) have significant disinfecting power. According to the graphs presented by the researchers, at a pH of 5.9 and a temperature of 20°C, a greater than 99 percent kill was obtained in approximately 10 minutes at 16 ppm, 16 minutes at 8 ppm, 20 minutes at 4 ppm, and 50 minutes at 2 ppm. It is important to note that these tests were performed on water low in dissolved organic mater; thus, the capacity of permanganate to inactivate microorganisms in relatively organic-rich surface water is unknown.

As a disinfectant, an undesirable characteristic of potassium permanganate is that unreacted permanganate leaves an undesirable pink color in the water. For this reason, it is not considered a candidate for a residual disinfectant. Also, one of the main reaction by-products of permanganate treatment, the insoluble manganese dioxide (MnO_2), must be effectively removed from the water by filtration or it will give the water a light brown color and cause dark staining of household fixtures and laundry.

Potassium permanganate is most frequently used in water treatment as a oxidant for iron, manganese and hydrogen sulfide removal; for taste and odor control; and as an alternative preoxidant to free chlorine for THM control. Used for these purposes, potassium permanganate undoubtedly also accomplishes some disinfection of the water.

The National Research Council (1980) characterizes potassium permanganate as a poor bactericide compared to the other disinfectants discussed in this report. There is no reliable data on its effects on viruses or protozoan cysts. The New Jersey Department of Environmental Protection (NJDEP) and most other state authorities do not recognize use of potassium permanganate as an acceptable primary disinfectant.

3.4.2 PRACTICAL CONSIDERATIONS

Potassium permanganate is stable and easily dissolves in water. The dry powder is delivered in pails, drums, or hopper trucks. Stock solutions can be mixed by a batch process by using saturators similar to those used for

making sodium fluoride solutions, or with continuous dry feeders and makeup water systems.

Permanganate gives a pink color to water. Chemical addition control is achieved by monitoring the pink color in the water. As the permanganate oxidizes contaminants, the pink color diminishes (permanganate is reduced to manganese dioxide). Permanganate concentration can also be determined by amperometric titration.

Insoluble manganese dioxide and unreacted permanganate must be effectively removed from the water before it enters the distribution system to avoid customer complaints. These compounds are frequently removed in treatment plants by filtration with greensand filters. Greensand contains the mineral glauconite and is a natural ion exchanger. Its removal capacity for permanganate and manganese dioxide must be periodically chemically regenerated.

3.4.3 APPLICATION TO REDUCTION OF THMs

Potassium permanganate treatment of drinking water does not produce THMs. Because it acts as an oxidant and exhibits some bactericidal effect, the replacement of free chlorine oxidation with permanganate oxidation in water treatment may be appropriate in some instances.

The most frequent application is as a replacement for prechlorination for taste and odor control and iron and manganese oxidation. However, a major drawback is the need to provide a process to remove the oxidation by-products. Potassium permanganate is not appropriate for use as residual disinfectant.

The replacement of chlorine with permanganate as a preoxidant before settling has reduced the level of THMs in finished water at a number of plants (Blanck 1979).

Potassium permanganate treatment can reduce the trihalomethane formation potential by oxidation of precursors to organic forms that are not amenable

to halogen addition. The EPA (1981) reports that Singer et al. conducted experiments on surface water high in THMFP in North Carolina. The THMFP was reduced by 30 to 40 percent when potassium permanganate treatments of 10 mg/l were carried out at a pH of 6.6 to 10.3. The researchers attributed the majority of the reduction of THMFP to the oxidation of organic precursors and a minority of the reduction to the effect of precursor precipitation with manganese dioxide.

3.5 EXPERIENCE AT WATER TREATMENT PLANTS USING ALTERNATIVES TO CHLORINATION

3.5.1 HACKENSACK WATER COMPANY

At its Haworth Water Treatment Plant in New Milford, New Jersey, the Hackensack Water Company (HWC) has under construction an expanded 200-mgd water treatment facility that will utilize ozone for predisinfection and microflocculation. In addition to ozonation, the facility will use: chemical mixing, flotation (to remove excess oxygen and ozone), filtration, chlorination, chloramination, and pH adjustment.

Figure 3-4 is a system schematic. The process approach is direct filtration. Ozone can be used for both disinfection and microflocculation. The primary disinfection step will be accomplished by the ozone. Gaseous chlorine will be applied just prior to filtration to assist in manganese removal and to maintain the biological integrity of the filters. Post-disinfection will be accomplished with chloramines.

Ozone will encourage micellization of suspended colloids and generate microflocs for better filter performance. These microflocs, on the basis of previous experience and HWC pilot studies, will achieve deeper penetration into the filter media than typical with filtration and should prove to be more durable and tenacious than flocs not subjected to ozone, making them more easily filterable.

Based on the pilot studies conducted by HWC between 1979 and 1985, it appears that HWC's Haworth plant will be able to consistently meet a total

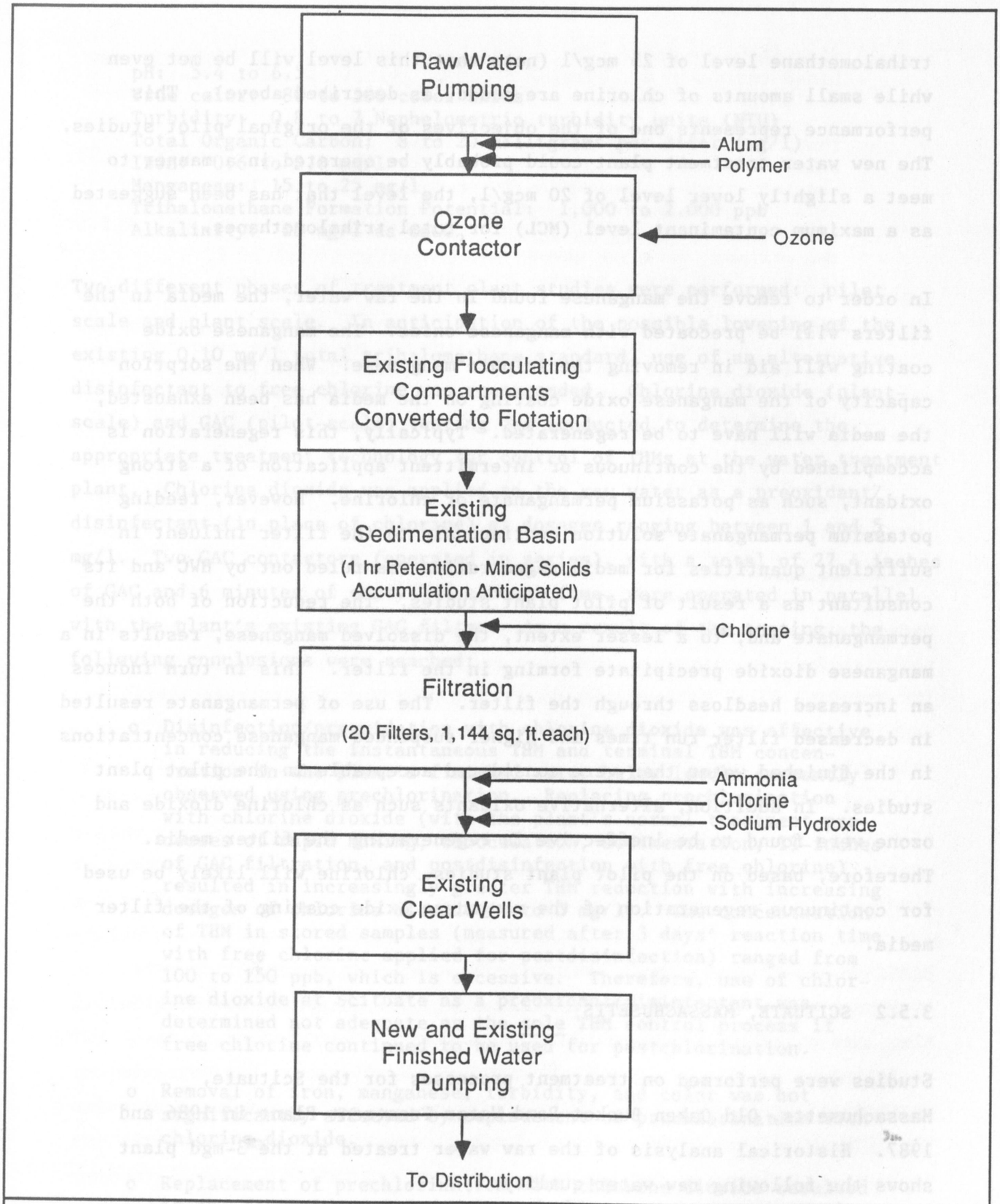

CDM
environmental engineers, scientists, planners & management consultants

Figure 3-4

Hackensack Water Company
Haworth Plant Process Schematic

Prevention and Removal of Chlorination By-Products

trihalomethane level of 25 mcg/l (note that this level will be met even while small amounts of chlorine are added, as described above). This performance represents one of the objectives of the original pilot studies. The new water treatment plant could probably be operated in a manner to meet a slightly lower level of 20 mcg/l, the level that has been suggested as a maximum contaminant level (MCL) for total trihalomethanes.

In order to remove the manganese found in the raw water, the media in the filters will be precoated with manganese oxide. The manganese oxide coating will aid in removing the soluble manganese. When the sorption capacity of the manganese oxide coating on the media has been exhausted, the media will have to be regenerated. Typically, this regeneration is accomplished by the continuous or intermittent application of a strong oxidant, such as potassium permanganate or chlorine. However, feeding potassium permanganate solution continuously to the filter influent in sufficient quantities for media regeneration was ruled out by HWC and its consultant as a result of pilot plant studies. The reduction of both the permanganate and, to a lesser extent, the dissolved manganese, results in a manganese dioxide precipitate forming in the filter. This in turn induces an increased headloss through the filter. The use of permanganate resulted in decreased filter run times and higher suspended manganese concentrations in the finished water than were considered acceptable in the pilot plant studies. In addition, alternative oxidants such as chlorine dioxide and ozone were found to be ineffective in regenerating the filter media. Therefore, based on the pilot plant studies, chlorine will likely be used for continuous regeneration of the manganese oxide coating of the filter media.

3.5.2 SCITUATE, MASSACHUSETTS

Studies were performed on treatment processes for the Scituate, Massachusetts, Old Oaken Bucket Pond Water Treatment Plant in 1986 and 1987. Historical analysis of the raw water treated at the 3-mgd plant shows the following raw water quality:

pH: 5.4 to 6.5
True color: 80 to 300 color units
Turbidity: 0.8 to 7 Nephelometric turbidity units (NTU)
Total Organic Carbon: 8 to 20 milligrams per liter (mg/l)
Iron: 0.6 to 2.0 mg/l
Manganese: 15 to 25 mg/l
Trihalomethane Formation Potential: 1,000 to 2,000 ppb
Alkalinity: 25 mg/l as $CaCO_3$

Two different phases of treatment plant studies were performed: pilot scale and plant scale. In anticipation of the possible lowering of the existing 0.10 mg/l total trihalomethane standard, use of an alternative disinfectant to free chlorine was recommended. Chlorine dioxide (plant-scale) and GAC (pilot-scale) testing was conducted to determine the appropriate treatment technology for control of THMs at the water treatment plant. Chlorine dioxide was applied to the raw water as a preoxidant/disinfectant (in place of chlorine) at dosages ranging between 1 and 5 mg/l. Two GAC contactors (operated in series), with a total of 27.4 inches of GAC and 6 minutes of empty bed contact time, were operated in parallel with the plant's existing GAC filter. As a result of the testing, the following conclusions were reached:

- Disinfection/preoxidation with chlorine dioxide was effective in reducing the instantaneous THM and terminal THM concentration in the plant's finished water below levels currently observed using prechlorination. Replacing prechlorination with chlorine dioxide (with the plant's normal treatment processes of rapid mixing, flocculation, sedimentation, 11-inches of GAC filtration, and postdisinfection with free chlorine) resulted in increasingly greater THM reduction with increasing dosages of chlorine dioxide (4 to 5 mg/l). The concentration of THM in stored samples (measured after 3 days' reaction time with free chlorine applied for postdisinfection) ranged from 100 to 150 ppb, which is excessive. Therefore, use of chlorine dioxide at Scituate as a preoxidant/disinfectant was determined not adequate as the sole THM control process if free chlorine continued to be used for postchlorination.
- Removal of iron, manganese, turbidity, and color was not significantly affected by replacement of prechlorination with chlorine dioxide.
- Replacement of prechlorination with chlorine dioxide resulted in the formation and detection of chlorite, a common reaction by-product of chlorine dioxide. (Because of health concerns related to the consumption of water containing chlorine

dioxide by-products, EPA currently recommends that the combined residuals of chlorine dioxide, chlorite, and chlorate not exceed 1.0 mg/l).

- The plant's existing filter, containing 11 inches of GAC, remove 20 to 50 percent of the settled water chlorite concentration. About 60 to 90 percent of the settled water chlorite was removed through the first of two pilot-scale GAC contactors operating in series. Chlorite was not detected in the effluent from the second GAC contactor (total of 27.4 inches of GAC and 6 minutes of empty bed contact time).

- GAC was effective in reducing the TOC and THMFP of the settled water. However, because of the high GAC usage rate required for adsorption of THM precursors (humics), GAC filtration/adsorption was determined not to be cost-effective for use as the sole control of THMs (although it is needed for chlorite removal).

- The pilot-scale GAC filter/adsorbers were effective in reducing the true color of the plant's settled water to about 5 color units compared with finished water color of about 15 units, achieved through the plant's existing 11-inch deep GAC filter.

Based on the plant and pilot-scale testing conducted, it appears that postdisinfection using free chlorine cannot be continued if the existing THM standard (0.10 mg/l average in the distribution system) is significantly reduced (below 50 ppb). In this case, postdisinfection with chloramines was recommended for THM control. It was concluded that chloramination will not result in significant THM formation, is cost-effective, easily implemented, and is an effective postdisinfectant when a strong disinfectant such as chlorine dioxide is used at the head of the plant as the principal disinfection process.

Based on the testing the following modifications of the existing water treatment plant were recommended: chemical addition (chlorine dioxide, alum, and potassium hydroxide) and rapid mixing, flocculation, sedimentation, sand filtration, GAC filtration, pH adjustment for corrosion control, fluoridation, and postdisinfection. Provision should be made for the future addition of chloramines for stricter THM control. Multiple application points (in rapid mixing units, filter influent channel, and clearwell) should be provided for application of the three disinfectants (free chlorine, chlorine dioxide, and chloramines) that may be used in one

combination or another to provide built-in flexibility to meet anticipated water quality standards. While the future water quality standards are unknown at this time, this represents a responsible engineering approach (Camp Dresser & McKee 1987).

3.5.3 LOS ANGELES, CALIFORNIA

For the City of Los Angeles Department of Water and Power, pilot testing was performed for the design of the Los Angeles Aqueduct Water Filtration Plant, which is to provide 600 mgd for the City's 2.8 million residents. As part of the pilot testing, the ability to meet a level of 25 mcg/l total trihalomethanes was assessed. Various disinfection schemes and filtration media were tested to determine an optimum approach to lowering the THMs produced by this direct filtration plant. It was found that preozonation, coagulation/flocculation, and filtration reduced the THMFP to between two-thirds and one-half of the potential found in the raw water. With the use of GAC as filter media, THMFP was reduced to 12 mcg/l, making it possible to meet a 25 mcg/l total trihalomethane level. The results demonstrated that preozonation is an effective means of reducing THMs and that use of preozonation with GAC would probably produce a finished water with THMs below 25 mcg/l (Camp Dresser & McKee 1982).

3.5.4 WORCESTER, MASSACHUSETTS

For the City of Worcester, Massachusetts, pilot tests were conducted for a new full-scale facility to treat a dual water source supply with inconsistent turbidity and unsafe coliform levels. Results indicated that ozone pretreatment combined with direct filtration through a deep bed anthracite filter produced low turbidity levels and removed bacteria. Based on the THM formation potentials of the raw water and the existing THM levels in the distribution system (typically 50 to 60 mcg/l), the pilot tests indicated that preozonation followed by coagulation and filtration could reduce the actual THM levels in the distribution system by approximately 50 percent, or to 25 to 30 mcg/l. In addition, ozonation increased the filter run length and reduced the coagulant dosage required. Moreover, the use of

ozone also decreased the total trihalomethane formation potential as well as the odor of the filtered effluent water (Camp Dresser & McKee Inc. 1986).

3.6 NEW DISINFECTION REGULATIONS

Under of the Safe Drinking Water Act Amendments of 1986, EPA is required to develop minimum criteria for disinfection. These criteria are currently under development by EPA and, according to the proposed filtration and disinfection regulations, published in the November 3, 1987, Federal Register, adequate disinfection will be defined by minimum "CT values" for achieving specified levels of inactivation of Giardia lamblia. The CT value is a number derived by multiplying the concentration of the disinfectant (mg/l) by disinfectant contact time (minutes). Ultimately, a water purveyor attempting to address proposed THM standards will not be able to arbitrarily reduce the level of disinfectant dosage or contact time without considering these new disinfection standards. The CT values presently under discussion for filtered water supplies are summarized in table 3-1.

Chloramines. The CT values under consideration by EPA are high enough that the use of chloramines for the principal deactivation step is impractical.

Chlorine Dioxide. The federal government recommends that the maximum dosage of chlorine dioxide be limited to 1.0 mg/l because of the toxicological effects of its inorganic by-products: chlorates and chlorites. The CT values under consideration by EPA, coupled with this limit on dosage, make chlorine dioxide difficult to use as a primary disinfectant, except where contact times of relatively long duration are available.

Ozone. The CT values being considered for ozone are low, in the single digit range. Consequently, although ozone does not leave a lasting residual, under many circumstances it will be ideal for the principal deactivation step. However, the by-products and health effects of ozone are still relatively unknown. Though preliminary indications are that the health effects are minimal, further research into the health effects of ozone is justified.

TABLE 3-1

PROPOSED CT VALUES FOR ACHIEVING
90 PERCENT INACTIVATION OF GIARDIA LAMBLIA[a]

		Temperature (°C)			
	pH	0.5	5	10	15
Free Chlorine[b]	6	60	40	30	20
	7	90	60	40	30
	8	130	90	60	50
	9	170	120	90	60
Ozone	6-9	1.5	1	0.8	0.7
Chlorine Dioxide	6-9	27	17	13	9
Chloramines (preformed)	6-9	1270	730	620	500

[a]These CT values are applicable only in conjunction with treatment systems that also use filtration. Data proposed as of 6/88.

[b]CT values will vary depending on concentration of free chlorine. Values indicated are for 2.0 mg/l free residual chlorine.

Section 4

4.0 HEALTH EFFECTS OF DISINFECTANTS AND DISINFECTANT BYPRODUCTS

At surface water treatment plants, disinfectants (usually chlorine) are added to raw water to kill pathogens and to oxidize organics or metals. Additional disinfectant is added to the finished water to carry a residual through the distribution system. In the United States, conventional wisdom (and in some cases state or local codes) provide for the maintenance of residual disinfectant in the distribution system. The precipitous decline in waterborne diseases that has occurred in the United States during this century has been attributed largely to chlorination of drinking water.

Although the benefits of drinking water disinfection have been widely acknowledged, some detrimental side effects of disinfection have recently been discovered. In the mid-1970s, researchers in the Netherlands and the United States discovered chloroform in drinking water. It was shown that chloroform and other trihalomethanes (THM) resulted from the disinfection of water with chlorine. By the late 1970s, it was determined that occurrence of trihalomethanes in the United States was widespread. Since chloroform is a probable human carcinogen, the U.S. Environmental Protection Agency (EPA) in 1979 promulgated regulations limiting the levels of THMs in drinking water.

Currently, there also is concern regarding the health effects of compounds other than THMs that result from drinking water disinfection. The health effects of THMs, these other disinfection by-products and the disinfectants themselves are discussed here. This chapter is intended to provide an overview of the health effects of disinfectants and disinfection by-products and the occurrence of those by-products. It is not a comprehensive compilation.

4.1 BY-PRODUCTS AND HEALTH EFFECTS

A variety of health effects can be observed in connection with disinfection by-products. They include cancer, mutagenic effects, anemia, and prenatal

abnormalities. Acute toxic effects are those that are evident shortly after the ingestion of a compound. Chronic toxic effects are those that are realized after years of exposure to a compound. Carcinogenic effects are one type of chronic toxic effect. The carcinogenic hazard of exposure is thought to be cumulative over time. Hence, continuous exposure to low levels of carcinogenic compounds may result in increased incidence of cancer.

Public health scientists can identify compounds as being hazardous using a variety of methods. These methods include: acute testing, epidemiological studies, chronic testing and mutagenic testing. Acute toxic effects have been observed and reported by physicians and they have been reported by toxicologists who perform controlled experiments that frequently use elevated dosages of the studied compound. Carcinogenic effects have been observed in the workplace when an increased incidence of cancer is observed in workers after many years of exposure to a certain chemical (such as in asbestos manufacturing). Statistical methods have been used in an attempt to compare the rates of cancer in large groups of individuals to certain quantifiable environmental factors. Using experimental methods, scientists have looked for evidence of toxic effects in animals by exposing them to high doses of the compound over the animals lifetime. Toxic effects looked for in animals include tumor formation (carcinogenic effect), mutation of cells (mutagenic effect) and birth defects in offspring (teratogenic effect). A common test that is performed is the Ames test (Ames 1973), which indicates mutagenicity of a compound on a controlled group of microorganisms (an indicator of possible toxicity or carcinogenicity). However, the transferability of the results of the Ames test is not always valid.

Public health professionals evaluate toxicity data and calculate expected health risks from exposure to toxics. Regulations limiting exposure to toxics are then promulgated to limit the health risks to acceptable levels. EPA has promulgated National Primary Drinking Water Standards to limit the level of contaminants in drinking water. The Agency is now in the process of revising the standards. EPA published in the Federal Register on July 8, 1987, notice of its proposed Drinking Water Priority List (DWPL). EPA

has identified the following disinfectants and disinfection by-products as possible contaminants to be included on the DWPL:

- o Disinfectants
  - Chlorine
  - Hypochlorite ion
  - Chlorine dioxide
  - Chlorite
  - Chlorate
  - Chloramine
  - Ammonia
  - Ozone
- o Trihalomethanes
  - Chloroform
  - Bromoform
  - Bromodichloromethane
  - Dibromochloromethane
  - Dichloroiodomethane
- o Halonitriles
  - Bromochloroacetonitriles
  - Dichloroacetonitrile
  - Dibromoacetonitrile
- o Halogenated acids, alcohols, aldehydes, and ketones
  - Monochloroacetic acid
  - Dichloroacetic acid
  - Chloralhydrate
  - 2,4-dichlorophenol
- o Others
  - o Chloropicrin
  - o Cyanogen chloride
  - o 3-Chloro-4-(dichloromethyl)-5-hydroxy-2(5H)-furanone (MX)

No by-products of ozone are included on this list. In fact, the July 8, 1987, Federal Register indicated that, to date, the by-products of ozonation (alcohols, ketones, aldehydes) are not known to be toxic by EPA. However, analytical methods do not exist for detection of potential electrophillic by-products which are more toxic, such as epoxides and peroxides.

Table 4-1, developed by Bull and McCabe (1985), presents a summary of health effects identified with alternate drinking water disinfectants and their by-products. Furthermore, Bull (1982) states that the teratogenic activity of the alternate disinfectants cannot be demonstrated because of the limited nature of the data on this issue.

In the 1985 article, "Risk Assessment Issues in Evaluating the Health Effects of Alternate Means of Drinking Water Disinfection" (1985), Bull and McCabe state that some risk will be associated with any alternative disinfectants to chlorine. Bull and McCabe further indicate that decisions involving choices between available disinfectants must focus on toxicological effects, both short and long term. Essentially, they believe that the focus on carcinogenesis as the pivotal issue in safe drinking water does not adequately take into account some of the shorter term noncarcinogenic health effects that they view as being of importance also, such as adverse reproductive problems or delayed development of the cerebellum cerebral cortex.

In the study of health effects of drinking water, one must consider the technical limitations of the analytical techniques used to identify trace contaminants in the water. Much attention has been focused on the great diversity of chemicals that can be identified by gas chromatography-mass spectrometry, but it has been generally appreciated that this analytical method can identify only a portion of the organic material actually present in surface waters. Other analytical techniques are thought to be more applicable for quantifying the less polar and the less volatile compounds.

The caveat one must consider when reviewing health effects is the applicability of the reported data to human populations. Epidemiological studies on human populations are not available for most chemicals. Even when these types of studies are available, the observations may not be transferable to the ingestion of drinking water. More common than epidemiological studies are tightly controlled experiments utilizing small mammals such as mice, rats, or rabbits. These studies are generally conducted at dosages orders of magnitude greater than humans would be exposed to in drinking water. A fundamental question that often has to be

TABLE 4-1

HEALTH EFFECTS IDENTIFIED WITH DRINKING WATER DISINFECTANTS OR THEIR BY-PRODUCTS[a]

Disinfectant	"Direct" effects	Byproducts	Effects of byproducts
Chlorine	Increased spermhead abnormalities	Chloroform	Hepatotoxic, renal toxicity, carcinogenic
	Increased serum cholesterol	Dichlorobromomethane	Hepatotoxic, renal toxicity
	Myocardial hypertrophy	Dibromochloromethane	Hepatotoxic
	Mutagenic in bacteria	Bromoform	Hepatotoxic
	Hyperplasia in skin	Dichloroacetic acid	Decreased serum glucose and lactate, neurotoxic, aspermatogenesis, ocular lesions
		Trichloroacetic acid	Induction of peroxisomes
		Chloroacetonitrile	Clastogenic, carcinogenic
		Dichloroacetonitrile	Mutagenic, clastogenic
		Trichloroacetonitrile	Clastogenic
		Bromochloroacetonitrile	Mutagenic, clastogenic, carcinogenic
		Dibromoacetonitrile	Clastogenic, carcinogenic
		2-chlorophenol	Fetotoxic, tumor promoter
		2,4-dichlorophenol	Fetotoxic, tumor promoter
		2,4,6-trichlorophenol	Carcinogenic
		Halogenated ketones	Mutagenic
		Halogenated aldehydes	Mutagenic
		Organic N-chloramines	Model compounds genotoxic
Monochloramine	Hemolytic anemia	Organic byproducts poorly studied.	
	Abnormal mitotic figures in liver	Miscellaneous direct acting mutagens	
	Mutagenic in bacteria		
Chlorine dioxide	Antithyroid effects	Chlorite	Hemolytic anemia, spermhead abnormalities, decreased sperm motility.
	Prenatal exposure: Depressed cerebellar weight	Organic byproducts poorly studied	

TABLE 4-1
(continued)

HEALTH EFFECTS IDENTIFIED WITH DRINKING WATER DISINFECTANTS OR THEIR BY-PRODUCTS[a]

Disinfectant	"Direct" effects	Byproducts	Effects of byproducts
	Decreased cell number in cerebellum Delayed neuro-behavioral effects Postnatal exposure: Depressed cerebral weight Decreased cell number in cerebrum Delayed neurobehavioral effects Hyperplasia in skin		
Ozone	None[c]		Mutagenic by-products poorly studied

[a]After Bull and McCabe (1984)

[b]"Direct" effects are those health effects, both acute and chronic, induced by the disinfectant itself and found under controlled conditions at either normal or elevated dosages

[c]Since an ozone residual is short-lived, no direct effects are observed.

(16)

addressed by toxicologists and public health scientists is the transferability of health effects findings to human populations at lower dosage rates over longer periods of time. Ultimately, the conclusions drawn from these studies may have to be translated into public policy, such as drinking water regulations.

4.2 CHLORINATION

By-products of Chlorination

Only a small percentage of the chlorine consumed as chlorine demand actually combines to form chlorinated organics. Most of it is simply reduced to chloride. The chloride level in finished water is limited under the Federal Secondary Drinking Water Regulations to a relatively high level of 250 mg/l. This level would not be exceeded as a result of disinfection with chlorine in drinking water.

Some of the chlorine consumed during disinfection combines with organics in the raw water to form THMs. Chloroform is the most commonly formed trihalomethane. For example, at a Philadelphia, Pennsylvania water treatment plant that treats Delaware River water (Baxter Water Treatment Plant), chloroform constitutes up to 75 percent of the total THM concentration in the finished water (Neukrug et al. 1984). At the Passaic Valley Water Commission's Little Falls plant in New Jersey, chloroform also constitutes about 75 percent of the total THMs.

Regulated THMs are easily quantified by gas chromatography. However, no simple analytical method exists for the identification and quantification of the major individual nonvolatile chlorinated organic compounds also formed in water as the result of chlorination. Gas chromatography/mass spectrometry does not detect many of the higher-molecular-weight, polar compounds.

Halogenated organic species in drinking water can be estimated by measuring total organic halogen, or TOX (Stevens et al. 1985). Some researchers believe that the toxic character of chlorinated drinking water is asso-

ciated with not only the THMs, but also with many other chlorinated organic compounds generated during chlorination. Therefore, they conclude that monitoring of TOX is more appropriate than monitoring THMs to measure the toxicity induced by chlorination (Jolley 1985).

Chlorination of naturally occurring organics produces several times as much TOX as chloroform. Both THM and TOX production are strongly influenced by pH. Decreasing the pH will tend to reduce THMs only at the expense of a much larger production of TOX. The level of chlorine concentration also affects the relationship between THM and TOX concentrations (Johnson and Jensen 1983).

At low chlorine doses, substitution products dominate the makeup of TOX, while at higher doses, oxidation and cleavage products become more important. This effect results in proportionally higher THM concentrations at higher chlorine doses. The reason for this is that the greater breakup of the THM precursors creates many more opportunities for THMs to form by creating more "sites" on an increased number of smaller organic molecules.

Health Effects of Chlorination

Epidemiological studies have been undertaken to determine whether any association could be established between the chlorination of drinking water and the incidence of various cancers in the human population. Some studies found simple correlations between incidence of cancer in humans and chlorination of drinking water. But the most recent studies do not conclusively prove a causal relationship between chlorination of drinking water and incidence of human cancer. Nevertheless, these studies generally indicate that concern about the health effects of chlorine are not unfounded, given its toxic properties (Kruithof 1986).

As an example of this type of study, Druckery (1968) was able to maintain rats on 100 mg of chlorine per liter of drinking water for seven generations without observing any adverse effects (Bull 1982). As a test of direct, mutagenic toxic effect, male mice were treated with hypochlorite ion (OCl^-, chlorine solutions at pH 8.5) and sperm was monitored for

spermhead abnormalities. Dose-related abnormalities were observed at low doses and they peaked at the high dose of about 4 mg/kg (Bull 1984). Bull further reported in 1984 that chlorine, coupled with low calcium intake, and high fat intake increases the serum cholesterol in pigeons and leads to signs of myocardial hypertrophy in both pigeons and rabbits. These effects occurred with doses of chlorine ranging from 2 to 15 mg/l in drinking water. It is important to repeat that interspecies transferability of such findings to humans is difficult.

As reported by Bull (1984), chlorine is directly mutagenic in bacteria. Chlorine also produces hyperplasia (i.e., abnormal benign growths) in the skin of mammals. This effect is associated with tumor promotion, but there are conflicting reports in the literature about chlorine's ability to act as a tumor promoter (Bull 1984). Chlorine does not appear to cause anti-thyroid effects as does chlorine dioxide (Bull 1982).

Some investigators have suggested a relationship between chlorination reaction products and tumors of the bladder, large intestine, and colon, based on epidemiological studies (Kruithof of 1986). The National Cancer Institute demonstrated that chloroform produced a significant increased incidence of tumors in both mice and rats (NCI 1976).

Remarkably little information is available regarding the chronic toxicity of chloroform in air; even less is available regarding chronic oral toxicity. However, there are indications that chronic toxicity of chloroform is such that chloroform concentrations in drinking water up to 0.05 mg/l are not likely to produce toxic (excluding carcinogenic) effects in humans (Kruithof 1986).

Summarizing the toxicological effects of chlorination by-products, Bull and McCabe (1985) state:

> Trihalomethanes are the most familiar by-products of drinking water chlorination. Most of the concern about THMs arises from the demonstrated carcinogenic properties of chloroform in rats and mice. Although other THMs share many of the toxicological properties of chloroform, the results of carcinogenesis bioassays have not been reported.... The haloacetonitriles are another

> group of by-products and products formed by the chlorination of drinking water..... In addition to being mutagenic in Salmonella and capable of inducing sister chromatid exchange in mammalian cells (in vitro), these chemicals have been shown to induce tumors of the skin and lungs in mice. ...the halogenated acetones and aldehydes are direct-acting mutagens, however, the carcinogenicity of these products remains to be confirmed. ...One possible group of by-products of chlorine reaction with amino acids that includes members with genotoxic properties is known as organic N-chloramines. However, such products have yet to receive serious toxicological study..... Haloacid derivatives make up another class of compounds formed in the chlorination of drinking water and on ingestion of aqueous solutions of chlorine. The most prominent of these are dichloroacetic acid and trichloroacetic acid. Various salts of dichloroacetate have been used therapeutically to control blood glucose levels in diabetics. However, its use in humans was curtailed because of the development of polyneuropathy in a patient... Katz et al. confirmed the toxic properties of dichloroacetate in 90-d studies conducted in rats and dogs. ...Halogenated phenols form another class of chemicals that have been identified as by-products of chlorination. Within this class, the chemical that has been best characterized toxicologically is 2,4,6-trichlorophenol. The principal finding is that it is capable of inducing hepatocellular carcinomas in male and female mice and increasing the incidence of lymphomas and leukemia in male rats. ...The chemicals 2-chlorophenol and 2,4-dichlorophenol are apparently weakly fetotoxic and seem to have the capability of acting as cocarcinogens.

EPA has classified chloroform as a probable human carcinogen based on convincing evidence from animal studies. Because the brominated THMs show chemical and physical properties similar to chloroform, they are also presumed carcinogenic.

4.3 CHLORAMINATION

Monochloramine has been reported as capable of producing methemoglobinemia in patients using dialysis treatment for chronic renal failure (Bull 1984). Shih and Lederberg (1976) have shown that monochloramine is directly mutagenic in the bacteria Bacillus subtilis. Monochloramine failed to produce significant alterations of serum thyroxin levels during experiments with monkeys (Bull 1982).

Summarizing the health effects of by-products of chloramination, Bull and McCabe (1985) state:

> Unlike chlorination, chloramination has received very little attention as a process that gives rise to toxicologically important by-products. Again this seems to stem from the general theory that the use of chloramination suppresses the formation of the trihalomethanes. Obviously, the data presented...indicate that chloramine does give rise to direct-acting mutagens in much the same manner as chlorine. To date no products of this reaction have been identified or studied toxicologically. Since the two processes differ substantially in the level of trihalomethanes produced, it is possible that the nature of the products formed may be substantially different. Therefore, to conclude from the Ames assay results that the reduced level of mutagenic activity seen with chloramine actually represents a reduced carcinogenic hazard would be premature.

4.4 OZONATION

Since ozone does not leave a stable residual in drinking water systems, there appears to be little basis of concern regarding the health effects of ozone itself. The ozonation intermediate products -- free radicals of hydroxyl (OH) and hydroperoxyl (HO_2), the ozonide ion (O_3-), and hydrogen peroxide (H_2O_2) -- are themselves disinfectants. Because the intermediates are readily consumed by organic material and are also unstable, it is reasonable to assume that they are usually not present in the distribution system (Greenberg 1980).

In summarizing work by Glaze, Greenberg (1980) states that in one water treatment plant, several aldehydes (N-hexanal, N-heptanal, N-octanal, and N-nonanal) were identified while in another, a number of hydrocarbons (N-hexane, N-heptane, N-octane, and N-nonane) were found in addition to the aldehydes. It is not currently thought that these compounds will cause toxic effects at the levels expected in water supplies.

The mechanism by which ozone dissociates in water suggests that epoxides and/or organic peroxides, which are known to be hazardous, may be formed, although these compounds have not yet been identified in drinking water (Greenberg 1980) because analytical methods do not yet exist.

Bull (1980) reported increased skin tumor initiation in mice treated with the organic concentrate of ozonated Ohio River water and an EPA review (1977) referred to several preliminary reports showing increased mutageni-

city (by the Ames test) using ozonated water. Despite the long use of ozone for water disinfection in parts of Europe, epidemiological data are not available (Greenberg 1980).

Summarizing the body of knowledge regarding by-products of ozonation, Bull and McCabe (1985) state:

> Although the general types of products formed in reactions of ozone with organic chemicals are well understood, no particular effort has been made to identify the products formed when ozone is used in the treatment of drinking water. Consequently, the toxicological characterization of ozonation by-products is in the most primitive state of all. This may be partially attributable to the inability to detect any significant generation of mutagenic activity when ozone disinfection of drinking water has been studied using the Ames test. ... Of course, mutagenicity testing can only be taken as a qualitative indication of the presence of putative carcinogenic or mutagenic hazard and not as a comprehensive means of assessing health hazards. Consequently, it cannot be said that the by-products of ozonation have been studied sufficiently to allow characterization of health hazards relative to other means of drinking water disinfection.

The apparent lack of data on the byproducts of ozonation may be attributed to the traditional use of the analytical methods of gas chromatography (GC) and combined GC-mass spectrometry (GC/MS) for the analysis of organic materials. These methods have proved valuable for the analysis of volatile compounds, particularly nonpolar compounds that may be preconcentrated by various partioning techniques; however, they have not been perfected for the analysis of very polar compounds, which may result from oxidation processes. Nor are these methods useful for unstable and short-lived compounds such as peroxidic compounds, ozonation intermediates that may affect health. Thus, it appears that investigators have yet to demonstrate the important products that are produced from the ozonation of organic materials in untreated and treated waters. To do so, these investigators will probably resort to using techniques such as liquid chromatography and Fourier transform infrared spectroscopy (NAS 1980).

Although not much work has been done to identify ozonation by-products in drinking water treatment, many researchers have studied the chemistry of ozone oxidation of pure components and two-component solutions. Consider-

ing the results of these studies, researchers have stated that ozone will cleave double bonds via direct molecular ozone attack, yielding acids, aldehydes, and ketones (Baily 1972).

The strongest statement to date regarding the acceptability of ozone treatment (from a public health perspective) comes from EPA in the July 8, 1987, Federal Register. EPA states that, "to date, the by-products of ozonation (alcohols, ketones, and aldehydes) are not known to be toxic."

4.5 CHLORINE DIOXIDE TREATMENT

In his literature review of the occurance and health effects of chlorine dioxide by-products, Rav-Acha (1984) reports that the first attempt to detect organic by-products formed as a consequence of drinking water disinfection by chlorine dioxide was made by Stevens (1982) on Ohio River water. In a preliminary in-house investigation, he studied the differences (determined by GC/MS) in total ion current profiles obtained from the purgeable compounds formed in chlorine-dioxide-treated and untreated waters. Many compounds found to be higher in concentration in the treated samples were identified as aldehydes by their respective mass spectra. No quantitative conclusions could be drawn, and many other compounds may have been overlooked. These results are generally in accordance with conclusions resulting from extrapolations of prior information concerning reactions of some organic groups with chlorine dioxide, in which many organic compounds such as amines and olefins were found to produce aldehydes upon their reactions with chlorine dioxide. Most aldehydes are not toxic, though some do have toxic and even carcinogenic properties, such as the alpha-keto-aldehydes, but they have not yet been detected in potable water.

Rav-Acha (1984) also noted that a group of organic compounds that was unexpectedly undetectable in water plants using chlorine dioxide is the carboxylic acids. In view of the fact that aliphatic aldehydes can be oxidized to their respective carboxylic acids by chlorine dioxide, one can expect conversion of some aldehydes to acids. Carboxylic acids may also be directly produced in the reaction of chlorine dioxide with humic materials.

Those acids that are very polar could not be detected by the methodology of Stevens (1982) or Schalekamp (1978), which was based on GC/MS measurements. The detection of such compounds will, however, be possible if high pressure liquid chromatography (HPLC) and other techniques of liquid chromatography are adopted.

Colchough et al. (1983) had begun to investigate the by-products formed by the application of chlorine dioxide to fulvic acid isolated from Black Lake in North Carolina. Rav-Acha (1984) reports that the main products identified were aliphatic and aromatic di- and tri-carboxylic acids, as well as aromatic derivatives of glyoxalic acid. Similar compounds have been found upon oxidation of humic materials with chlorine or alkaline permanganate (Christman 1980; Christman et al. 1981). A few chlorinated compounds were also identified in the chlorine dioxide degradation mixtures, including traces of monochloromalonic acid and monochlorosuccinic acid, as well as a significant amount of dichloroacetic acid. However, it is evident that few chlorinated compounds were produced compared to the amount found upon reaction of chlorine with humic materials. In the latter instance, a large amount of di- and tri-chloroacetic acids was discovered (Johnson et al. 1981).

Rav-Acha (1984) states that in view of the fact that chlorine dioxide reacts mainly as a one-electron acceptor, the organic byproducts formed by chlorine dioxide in drinking water would probably be quinones and hydroquinones produced by the reaction of chlorine dioxide with aquatic humic and fulvic acids. This is in addition to low molecular weight aldehydes and carboxylic acids, which are the usual oxydegradable products. Although most of the aldehydes (with the exception of formaldehyde and alpha-keto-aldehydes) and carboxylic acids are generally considered to be nontoxic, some quinones and hydroquinones have been found to possess biological activities (Trevors and Barsuraba 1980).

The main advantage of chlorine dioxide is that it produces considerably fewer chlorinated organic products than does chlorine. However, in a study performed by EPA, about 50 percent of the chlorine dioxide was converted to chlorite, which is undesirable in itself (Rav-Acha 1984).

There is a connection between chlorite and both methemoglobinemia and hemolytic anemia (Bull 1984). Chlorite causes the hemoglobin in the blood to be oxidized to methemoglobin which has a reduced capacity for oxygen transfer. Chlorite also causes decreased red blood cell count and hemoglobin concentration. Humans deficient in the enzyme glucose-6-phosphate dehydrogenase are particularly sensitive to red blood cell hemolytic agents.

Observations made in Norway on hematological effects of chlorite led to the government's recommendation that the residual chlorite concentrations should be zero (0.0 mg/l). In West Germany the maximum applied dose is limited to 0.3 mg/l because of presumed health effects, while in the Soviet Union it was concluded that organoleptic deterioration rather than health considerations should limit the concentration to 0.4 to 0.45 mg/l (Greenberg 1980).

Bull (1980) reports that no increased incidence of skin tumors was evident in mice treated with the organic concentrate obtained from chlorine-dioxide-disinfected Ohio River water. Chlorine dioxide has been shown to produce hyperplasia in the skin; this effect is associated with tumor promotion (Bull 1984). He also reports (1982) that experiments done on monkeys show that consuming water with very high levels of chlorine dioxide (30 to 100 mg/l) interfered with their thyroid functions.

Summarizing the toxicological effects of the reaction products of chlorine dioxide, Bull and McCabe (1985) state:

> There has been little characterization of the toxicology of by-products associated with the use of chlorine dioxide as a disinfectant in drinking water. ...the emphasis with this disinfectant has been on the hematological effects of its inorganic by-product, chlorite. ...the observed antithyroid activity of chlorine dioxide points out the need for much better characterization of the organic by-products of chlorine dioxide.

4.6 POTASSIUM PERMANGANATE

Information on potassium permanganate, its by-products and their health effects are very scarce in the drinking water treatment literature.

According to manufacturers literature (Carus Chemical Co.), potassium permanganate produces the by-products discussed in section 3.4.1. The organic by-products are uncharacterized, however, it is believed that THMs are not produced. Potassium ions and manganese dioxide are the main inorganic by-products. The manufacturers literature states that potassium permanganate has not been classified as a carcinogen by OSHA, NTP, or IARC. It says that solid potassium permanganate is considered a poison, and there is, apparently, some controversy about the degree of toxicity of the chemical...The majority of permanganate poisoning between 1924 and 1940 were attempted suicides and in nearly all instances, the product ingested was in the form of tablets of crystals and none were fatal. On the subject of long term overexposure they say that prolonged exposure, usually many years, to heavy concentrations of dust and fumes above the TLV-value, mainly in the form of manganese oxides may lead to lung irritation and central nervous system disorder -- the symptoms may simulate Parkinson's disease. However, they say that no known cases of central nervous system disorders due to exposure to the potassium permanganate form have been reported. High concentrations of potassium permanganate solutions are corrosive to body tissues. There is no discussion of any health effects due to consumption of drinking water treated with potassium permanganate.

Assuming that the toxicology of manganese is essentially similar to that of potassium permanganate and manganese dioxide, the following information is presented. EPA (1979) in Quality Criteria for Water, state that manganese is a vital micro-nutrient for humans and is normally ingested as a trace nutrient in food. The average human intake is approximately 10 mg/day. They said that very large doses of ingested manganese can cause some disease and liver damage but these are not water standard for manganese of 0.05 mg/l based not on health concerns, but on objectionable taste and color in the water.

4.7 SUMMARY

In summary, it becomes apparent from a review of the literature that no disinfectant can, at this time, be considered entirely free of health risk. However, the risks from not disinfecting drinking water are stag-

gering; they include such scourges as cholera, dysentery, tapeworm, giardasis, and others. This does not imply that the risks from various disinfectants should not be ascertained and minimized.

A classic example of risk reduction occurred in the 1970s when trihalomethanes were detected in drinking water. Once the risk was identified, EPA moved swiftly to impose a limit of 0.10 mg/l total THMs. As this study has indicated, attempts are now being made to further lower the limit on THMs, and, in turn, further lower the risk from this chlorination by-product.

In addition, it appears that the risk from chlorine dioxide by-products (chlorate and chlorite) has been ascertained, and governments around the globe have taken appropriate steps to impose regulations to minimize that risk.

The next obvious step is to further identify, through epidemiological and chemical research, the full risks of disinfection by-products and, once ascertained, place appropriate limits on these risks.

(10)

Section 5

Replicon

5.0 THM TREATMENT TECHNOLOGIES AND PRECURSOR REMOVAL

Trihalomethanes (THM) can be controlled either by reducing THM precursors before THMs are formed, or by removing the THMs after they are formed. A number of treatment technologies are capable of reducing either THM precursors or THMs. Traditional water treatment processes such as coagulation, clarification, filtration, and pH control can reduce THM formation. Chlorination practices can also be modified to reduce THM formation. Use of these processes and modification of chlorination practices were widely instituted in the United States in response to the promulgation of the present standard of 0.10 mg/l total THMs.

This section discusses the application of these conventional treatment processes as well as less conventional processes to control THMs.

5.1 COAGULATION

Coagulation is a process used to aggregate fine, suspended particles into larger particles. It works by first destabilizing, then aggregating colloidal and finely divided suspended matter. Coagulation can be achieved by the addition of floc-forming chemicals, usually ferric or aluminum salts.

Coagulation is commonly used as a key step in removing turbidity (suspended matter). By combining fine particles into larger particles, coagulation enhances the ability of the filtration and sedimentation processes to remove turbidity.

Because turbidity can harbor microorganisms, its removal can reduce the dosage required for proper disinfection, thereby reducing THM formation. Higher levels of total trihalomethane (TTHM) precursor removal are generally achievable when coagulant dosages are increased and pH is lowered, compared to usual water treatment practices (Recklow and Singer 1984).

Humic substances, which can combine with THM precursors to form THMs, can also be removed by coagulation. The best coagulation is achieved when all charged sites on the molecules of the humic substances are just neutralized by the oppositly charged sites on the coagulant molecules. This neutralization "destabilizes" the humic substances, enabling them to be combined into floc. The floc produced in this way may not be settleable in sedimentation basins, but will be filterable.

Various researchers have postulated mechanisms for removal of THM precursors by coagulation. For alum coagulation, incorporation of humic substances within the aluminum hydroxide floc or co-precipitation of aluminum humate along with aluminum hydroxide may occur. Destabilization via charge neutralization was also demonstrated for cationic polyelectrolytes and humic substances. Sweep coagulation by aluminum hydroxide precipitate and a charge neutralization-destabilization mechanism have been suggested for the coagulation of humic substances by alum. These mechanisms are similar to those for turbidity removal (Singer 1983).

5.2 MODIFICATION OF EXISTING CHLORINATION PRACTICES

Chlorine has been used as a preoxidant in water treatment plants for many years for taste and odor reduction, disinfection, and oxidation. Chlorine has been added at the raw water intake, where the THM precursors are at a relative maximum. Shifting chlorination to a point of lowered precursor concentration later in the conventional treatment process can reduce THM formation but also reduces disinfectant contact time. Thus, greater reliance is placed on bacteria removal by coagulation, settling, and filtration.

At many surface water treatment plants the principal disinfection step has been relocated from the intake to a point beyond the coagulation and flocculation steps. In some instances, the point of first disinfection occurs just prior to filtration. Disinfection may be provided prior to filtration to prevent undesirable biological activity in the filter media. Problems

such as slime growth in settling basins, which have been controlled by prechlorination, may be controlled by alternate treatment (e.g., potassium permanganate or chlorine dioxide).

Gummerman and Heim (1983) reported that THM levels were reduced at the Durham, North Carolina, plant by moving the point of prechlorination. Treatment of river water consisted of a presedimentation reservoir, alum coagulation, sedimentation, and dual-media filtration. Chlorine had been added ahead of the rapid-mix at an average dosage of 5.8 mg/l. After changes were made, chlorine was added just prior to filtration, at an average dosage of 3.7 mg/l. Finished water THMs dropped from an average of 129 mcg/l (July through December) before changeover, to 77 mcg/l (January through December) after changeover. Strategies similar to that used in Durham have been used at other water treatment plants around the country. As previously mentioned, most of these shifts in chlorination points and dosages were made in the late 1970's and early 1980's in response to the promulgation of the 0.10 mg/l total THM standard.

At Elizabethtown Water Company's Raritan-Millstone water treatment plant in Bound Brook, New Jersey, the point of prechlorination was moved from the raw water intake to the preflocculation basin. The intention is to satisfy the chlorine demand and generate a free residual. This disinfection practice maintains the biological integrity of the filters. Potassium permanganate replaced chlorine as the preoxidant for taste and odor control at the head of the plant. Postdisinfection is accomplished by adding ammonia to the remaining free chlorine residual to form chloramines. Total THMs are generally kept below 20 mcg/l.

5.3 pH ADJUSTMENT

Lowering the pH of the water before chlorination, coagulation, and settling has been reported by the American Water Works Service Company to increase the reaction time required for formation of THMs. The precursors can then be removed prior to THM formation. At the Western Pennsylvania Water's Company's Cannonsburg plant, the pH was maintained at 9.5 to 10.0; the effluent TTHM was 132 mcg/l. When softening was discontinued and the

coagulant was changed to ferric chloride, the treatment pH changed to about 7.6 and, in turn, the effluent TTHM dropped to 44 mcg/l. At another location, the Kentucky-American Water Company lowered settled water pH from 7.3 to 7.1 so that the effluent TTHM dropped from 128 to 114 mcg/l (Moser and Lee 1983).

The Huron, South Dakota, plant experienced a 75 percent reduction in concentrations of chloroform in the finished water when the chlorine addition point was moved from the rapid-mix basin (where high pH, lime soda softening took place) to the next process step (recarbonation) (Gummerman and Heim 1983).

For a given water quality, THM formation will tend to be lower at lower pHs, particularly if the water is initially in a basic condition (i.e., pH>7.0).

5.4 ACTIVATED CARBON ADSORPTION

Adsorption is a natural process by which molecules of a dissolved compound collect on and adhere to the surface of an adsorbent solid. Adhesion of the molecules on the surface can be caused by both chemical or physical forces. Chemical adsorption occurs when the attraction is so strong at the adsorbent surface that chemical bonding occurs.

Activated carbon is widely used in both water and wastewater practice. As stated earlier, adsorption is a physical/chemical process whereby contaminants in the water concentrate onto the surface of a solid. Activated carbon is effective in removing organic compounds primarily because of its very large surface area. The internal surface area of activated carbon typically ranges from 500 to 1,400 m^2/g. Also, of minor significance is the chemistry of carbon's surface. For the most part, activated carbon surfaces are nonpolar, making the adsorption of inorganics difficult and the adsorption of organics, particularly nonpolar ones, relatively easy.

Granular Activated Carbon (GAC). Both the trihalomethanes and the precursors of THMs are organic compounds, which can be adsorbed. However, the

ability of GAC to adsorb THM precursors is much greater than the ability to adsorb trihalomethanes. The concentration of THM precursors is usually considered to be a portion of the total organic carbon (TOC) concentration. TOC is easier to measure directly than THM precursors. The TOC test results also are available much more quickly than the THMFP tests results (minutes versus hours or even days, respectively).

Two approaches exist for reduction of THMs through the use of activated carbon. Either the THMs can be directly removed by the GAC, or TOC can be removed, with a corresponding portion of the trihalomethane formation potential (THMFP) also removed. Because THMFP is reduced, lower levels of THMs are produced when the treated water is disinfected.

The adsorption of THM precursors can be measured by monitoring the overall TOC concentration and breakthrough time. Generally, activated carbon has greater capacity for reduction of TOC levels (and the resulting THM levels) than for the direct removal of THMs. A significant portion of both the TOC and the THMFP is usually nonadsorbable.

The specific adsorption capacity of GAC is difficult to predict quantitatively for either THMs or TOC. Generally, the adsorption capacity for THMs can be estimated from the isotherms for the four trihalomethanes. However, to more firmly define the carbon life for the adsorption of THMs, and to estimate the carbon life for the adsorption of TOC, it is usually necessary to perform dynamic mini-column or pilot studies.

The pilot studies performed by Neukrug et al. (1984) at the Philadelphia Water Department's Baxter Water Treatment Plant indicated that GAC removed 100 percent of chloroform for over 40 days, after which breakthrough occurred. Preozonation increased the time to breakthrough by about a week or more. However, further pilot studies conducted at the Philadelphia pilot plant as reported by Maloney et al. (1985) showed contradictory results. Chloroform breakthrough occurred one week earlier on the ozone-GAC system than on the GAC system. Ozonation has been shown to affect chloroform removal by GAC; however, the effect can usually not be predicted

without pilot studies. Therefore, the cost of installing ozonation equipment for control of THMs cannot be justified without detailed pilot studies. Some studies have indicated that for TOC removal, in particular, ozonation can usually improve carbon life. However, in some cases, ozonation prior to GAC treatment for TOC removal will actually reduce carbon life. Again, pilot studies are usually justified.

Faust and Aly (1987) summarize Weber's studies on the rates of adsorption of humic acid and THMs on various commercial carbons. The studies were done with laboratory batch reactors. They observe that the adsorption rates appear to be rapid, and they approach equilibrium conditions within a short period of time. Summarizing Benedict's laboratory studies with GAC and THMs, they say that adsorption is an inefficient mode of treatment for these compounds. Faust and Aly summarize Yohe's pilot plant studies on Delaware River water in Philadelphia by observing that THM precursor removal in GAC columns rapidly decreases to zero percent removal. One conclusion of these pilot studies was that longer empty bed contact times (EBCT) results in longer carbon life for the removal of TTHM.

Powdered Activated Carbon. Powdered activated carbon (PAC) is generally not applicable to the removal of THMs or THM precursors except at large doses. Studies have shown that the PAC dosages needed to reduce each THM by 90 percent (from 1 mg/l to 0.1 mg/l) were as follows: chloroform (1,900 mg/l), bromodichloromethane (500 mg/l), dibromochloromethane (410 mg/l), and bromoform (150 mg/l). Other studies have indicated that at more typical THM concentrations, 50 percent more removal can only be accomplished at dosages of at least 50 mg/l (Faust and Aly 1982).

As part of Camp Dresser & McKee's experience under the Special Water Treatment Study - Phase II, full-scale experiments using PAC to remove THM precursors were performed at the City of Rahway's Water Treatment Plant and at the Passaic Valley Water Commission's Little Falls Water Treatment Plant. In both cases, the raw water was treated with 25 mg/l of PAC. The THMFP was not significantly reduced at either plant.

Higher dosages of PAC are not cost-effective compared to direct use of GAC. Since PAC has low adsorption capacity and is more difficult to regenerate, its initial operating cost is higher.

5.5 REVERSE OSMOSIS

Reverse osmosis (RO) is a process in which the semipermeable (molecular selective) characteristics of a membrane are used to separate contaminant from feed water under high pressure. RO is most widely used for treating brackish water.

RO is based on the naturally occurring phenomenon of osmosis. Osmosis occurs when solutions of two different total dissolved solids (TDS) concentrations are separated by a semipermeable membrane. In the osmosis process, water (solvent) tends to pass through the membrane from the more dilute side to the more concentrated side. An ideal osmotic membrane permits the passage of water molecules but prevents the passage of ions (solutes or contaminants). The net transfer of water from one side of the membrane to the other continues until equal TDS concentrations exist on both sides of the membrane or until the differential hydraulic head (water pressure) is large enough to prevent any net transfer of the water to the more concentrated solution. For example, if a brine solution is separated from pure water by a semipermeable membrane, water will pass through the membrane in both directions, but it will pass more rapidly in the direction of the brine solution. At equilibrium, the quantity of water passing in either direction is equal, and the differential head is defined as the osmotic pressure of the solution having that particular concentration of TDS.

RO has several disadvantages. Frequent cleaning of the membrane, even when adequate pretreatment is provided, is often necessary. Cleaning more than once a month generally indicates inadequate pretreatment. This condition will result in fouling of the membrane. Fouling involves the trapping of larger-molecular-weight material and inorganic material within the pores or on the surface of the membrane.

The significant advantage to reverse osmosis is its ability to remove a wide variety of dissolved solids of different types, including organics. However, the cost of the membranes, the constant attention required for operation, and high level of pretreatment place this system at a significant cost disadvantage.

Argo (1983) reports that a pilot-scale RO process has been effective for removing THMs. The Orange County, California, Water Factory 21 water reuse demonstration plant evaluated a 5,000-gallon-per-day (gpd) RO system from February 4, 1982, to August 31, 1983. The RO membrane was of an aromatic polyamide composition. The influent stream was activated-sludge-treated municipal wastewater that was not chlorinated. It was treated with 350 to 400 mg/l of lime (as CaO), which raised the pH to about 11.0. The clarified stream was then treated with sulfuric acid to adjust pH to 5.6 to 5.8, treated with sodium hexametaphosphate to reduce scaling on the RO membrane, and filtered with a 25-µm cartridge filter. The resulting stream was passed through the RO membrane where reduction in THMs was observed (Reinhard et al. 1986). The geometric mean of all samples for THMs were reported. Chloroform levels were reduced from 3.10 to 0.89 mcg/l (71 percent reduction), bromodichloromethane from 0.52 to 0.11 mcg/l (79 percent), dibromochloromethane from 0.53 to 0.11 mcg/l (79 percent), and bromoform from 0.32 to less than 0.20 mcg/l (greater than 67 percent).

Sorg and Love (1984) of EPA report that lab studies on a thin film composite (TFC) membrane showed that some halogenated hydrocarbons can be separated from water streams; however, but some pass through the membrane, and some are "sorbed" onto the membrane and then need to be flushed off. Carbon tetrachloride and 1,1,1-trichloroethane were consistently removed (greater than 98 percent removal) by this membrane. Trichloroethylene, tetrachloroethylene, chlorobenzene, and ortho- and meta-dichlorobenzene were sorbed onto the membrane.

RO membranes are capable of removing THMFP as well as THMs. Taylor, et al (1987) report that RO membranes with a molecular weight cutoff (MWC) of 400 achieve good THMFP reduction. At lower MWCs, THMFP was not reduced signi-

ficantly beyond that achieved at the 400 MWC level. However, ultrafiltration units with an MWC equal to or greater than 2,000 showed a much higher THMFP rejection rate. Their overall conclusion was that membrane processes are capable of effective and economical control of THMs, particularly in waters where raw water THMFP is particularly high.

5.6 AIR STRIPPING

Henry's Law states that when a dilute liquid solution of two compounds remains in equilibrium with their vapor phase, the concentration of the solute in the vapor is linearly proportional to the concentration of the solute in the liquid. The constant of proportionality for this relationship is called the Henry's Law constant. The practical significance of the Henry's Law constant is that its magnitude indicates how easily one compound is stripped from another.

Countercurrent packed-column stripping towers are widely considered to be more economical than spray towers, spray fountains, or diffused air systems. Therefore, for air stripping of trihalomethanes, packed tower aeration is generally applied.

The best available dimensionless Henry's Law constants for each of the trihalomethanes are summarized below for comparative purposes only:

	at 3 °C	at 20 °C
Chloroform	0.046	0.122
Bromodichloromethane	0.029	0.076
Dibromochloromethane	0.011	0.028
Bromoform	0.007	0.019

These Henry's law constants indicate that the THMs are marginally to moderately strippable. Required percent removals of THMs will typically be below 95 percent in order to meet the suggested regulatory framework. This level of removal is not excessive for air stripping of contaminants with Henry's Law constants in the range reported. Therefore, the use of air stripping to remove THMs is generally feasible.

A disadvantage of air stripping THMs is that the chlorine residual present in the water may also be stripped out at low pH. Rechlorination may be required, with the attendant potential formation of additional THMs. Also, if precursors remain in the water, then additional THM's may form in the distribution system.

THM precursors are not amenable to air stripping. Therefore, for THM control, air stripping is appropriate only after the formation of the THMs. This, coupled with the possibility that the chlorine residual will also be lost in the stripping process, represents a major disadvantage to use of air stripping for THM removal.

(12)

Section 6

6.0 TREATMENT PROCESSES AND COSTS FOR THM CONTROL

Capital and annual operating cost estimates for modifying conventional treatment plants to achieve lower trihalomethane (THM) levels are presented below. THM control technologies are added to the conventional treatment plant in various combinations and five resulting treatment plant arrangements are analyzed.

Only conceptual, informational level cost estimates are provided and are intended for comparative purposes only. Amortized capital costs and annual operating and maintenance costs are presented for each treatment plant arrangement at each of three different flow capacities.

6.1 COMMON GOALS AND ASSUMPTIONS FOR TREATMENT ARRANGEMENTS

A common point of departure for the comparison of the alternative treatment arrangements for THM control is the "conventional" treatment plant. The conventional plant for surface water treatment is assumed to be composed of the following processes and components:

- Surface water intake with bar screens
- Traveling screens
- Low-lift pumps
- Flash mixing of chemical coagulants
- Flocculation
- Sedimentation
- Rapid sand filtration
- Clearwell
- Corrosion control
- Chlorination facilities
- High-lift pumps

The typical New Jersey raw water surface supply is assumed to have a maximum trihalomethane formation potential (THMFP) of 300 mcg/l. The goal of each treatment system presented in this chapter will be to produce water that will meet the suggested level of 20 mcg/l total THMs, with chloroform not exceeding 5 mcg/l. Regulated THM levels are discussed in Section 1.0, Introduction.

For the treatment arrangements where chloramines and/or chlorine dioxide are to be added, it is assumed that the existing chlorination facilities are of adequate size and capability to supply chlorine as one of the reactants for the new disinfectant. Therefore, the cost estimates reflect continued use of the existing chlorination equipment.

Similarly, for the treatment arrangements presented in this chapter that utilize GAC filtration/adsorption, it is assumed that the existing filters can be converted to GAC filter/adsorbers. The cost estimate reflects use of the existing filters in this manner.

In sizing the various disinfection processes presented here, it was decided that primary disinfection would occur preceding filtration. Appropriate disinfectant dosages and contacting times, were selected in order to comply with the requirements of the Proposed EPA Filtration and Disinfection Rule (November 3, 1987, Federal Register). The proposed rule requires that certain minimum levels of disinfectant residual concentration and disinfectant contact time be maintained. The multiplication of the residual concentration and the contact time is called the CT value. It is important to note that the residual concentration C (in mg/l) must be measured at the point in the process after disinfectant addition where contact time T (in seconds) is measured. Understanding the preceding, it is apparent that the measured disinfectant residual will decrease from the point of disinfectant addition to the point of contact time measurement. This decrease, of course, is due to satisfaction of oxidant demand. Although the demand varies from water supply to water supply, we have assumed similar oxidant demands for the five treatment systems presented here in order to provide a consistent basis of comparison.

6.2 TREATMENT PROCESSES EMPLOYED

Five treatment process technologies were used to modify the conventional treatment processes for THM control:

- o Ozone disinfection/oxidation
- o Chlorine dioxide disinfection/oxidation
- o Chloramine postdisinfection
- o Granular activated carbon (GAC) adsorption
- o GAC filtration/adsorption

The processes were chosen for their ability to reduce THM levels in the finished water and their ability to contribute to the production of healthful and palatable drinking water.

6.2.1 OZONE DISINFECTION/OXIDATION

Ozonation is used for disinfection/oxidation because of its superior oxidizing capabilities. Additionally, when applied prior to filtration its microflocculating properties, which aid coagulation, are realized. For the purpose of this analysis, an average dosage of 1.0 mg/l and a 10-minute contact time were assumed. These values assure a disinfection CT value of at least 1.5 mg min/l will be achieved.

It is often necessary to use GAC treatment following ozonation to prevent biological regrowth problems in the distribution system. After ozonation, the large-molecular-weight, naturally occurring organics in the water are broken down into smaller fragments that readily support bacterial growth. GAC treatment is an effective means to reduce the potential of biological regrowth. The mechanisms of removal of these fragments includes adsorption within the GAC and biological reduction to carbon dioxide and water by the naturally occurring bacteria that thrives within the GAC granual pores. This growth provides biological stability to the water and minimizes the potential for future biological problems in the distribution system.

For some source waters with lower levels of natural organics, sufficient natural biological reduction of the organic fragments may occur within the conventional rapid sand filter. This capability would have to be evaluated on a site specific basis.

6.2.2 CHLORINE DIOXIDE DISINFECTION/OXIDATION

Chlorine dioxide is added as a primary disinfectant just prior to flash mixing. It is assumed that the chlorine addition at a conventional plant occurs at this point, so the chlorine dioxide addition is assumed to be retrofitted there.

The health effects of chlorine dioxide and the inorganic reaction by-products (chlorate and chlorite) in drinking water are of concern. EPA currently recommends that the combined level of these compounds not exceed 1.0 mg/l. For this reason, an average applied dosage of 1.0 mg/l has been used in this exercise.

The chlorine dioxide generation process selected is one in which chlorine gas reacts with a sodium chlorite solution. An area of uncertainty is the ability of a plant's operators to maintain the efficiency of the chlorine dioxide generation reaction. As the reaction efficiency diminishes owing to less-than-optimal plant operation, more free chlorine will be released into the system, this may then form THMs. The maintenance of high conversion efficiency through attentive plant operation can ensure the desired levels of THM reduction.

6.2.3 CHLORAMINE POSTDISINFECTION

Chloramines were selected as the postdisinfectant in all five treatment scenarios because they will not form THMs. The chloramines are formed by introducing ammonia into a treated water sidestream then introducing free chlorine. The chloramines are formed rapidly and THM formation is prevented. The ammonia-to-chlorine weight ratio selected is 4:1; this would produce primarily monochloramine. An average applied dosage of 2.0 mg/l was assumed.

6.2.4 GRANULAR ACTIVATED CARBON ADSORPTION

Granular activated carbon (GAC) is used for adsorption following ozonation and filtration, or following chlorine dioxide treatment.

It is beneficial to use GAC adsorption following chlorine dioxide treatment. The GAC effectively removes the potentially harmful chlorite and chlorate by-products introduced as a result of chlorine dioxide generation.

However, the GAC also removes unreacted chlorine dioxide and free chlorine from the water. Consequently, under most conditions, additional disinfectant should be added following the GAC contactors. Postdisinfection with chloramines was assumed to follow GAC adsorption.

6.2.5 GRANULAR ACTIVATED CARBON FILTRATION/ADSORPTION

GAC also can be used to filter turbidity from the water. The granular characteristics of GAC allow it to act much like sand during filtration. Because the GAC granual is more angular than that of sand, however, it appears that the backpressure buildup on GAC filters is more rapid than for sand filters, and the need for backwashing is more frequent. The rapid sand filters in conventional plants are often converted to GAC filter/adsorbers. Such a conversion is an economical because adsorption capability can be added without building a complete set of additional contactors.

6.3 DESCRIPTION OF TREATMENT ARRANGEMENTS FOR THM CONTROL

6.3.1 CONVENTIONAL TREATMENT WITH OZONE DISINFECTION

A schematic for a conventional treatment plant retrofitted for ozone disinfection is shown in figure 6-1. Here, a conventional treatment system has been modified, with ozone replacing chlorine as the primary disinfectant and chloramines used for postdisinfection. This combination of disinfectants is expected to reduce typical trihalomethane concentrations to the range of 10 to 20 mcg/l.

Ozone is added into a basin preceding the flash mixers. Addition of ozone contactors preceding the flash mixers is not expected to cause a significant change in the plant hydraulics because most low-lift pumps can provide the additional few feet of head that would exist between the new ozone contactors water level and the existing flash mix basin water level.

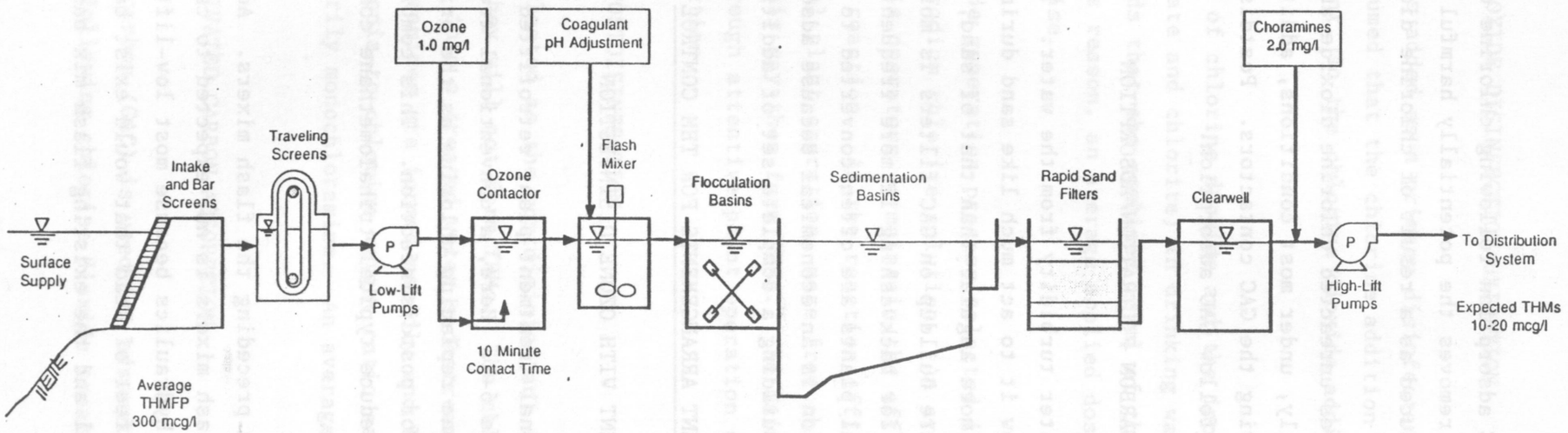

CDM
environmental engineers, scientists, planners & management consultants

Figure 6-1

Conventional Treatment Process Flow Schematic with Ozone Disinfection

One concern with this system is the possibility of biological growth occurring in open basins following ozonation. As described earlier, ozonation can yield water that is more susceptible to biological growth. This may be of special concern in open basins where sunlight would increase growth of taste- and odor-causing organisms. The covering of flocculation and sedimentation basins following ozonation is recommended.

Following the flocculation and sedimentation basins are the rapid sand filters and the clearwell. At clearwell, chloramines would be added to provide a persistent disinfectant residual. The finished water would be pumped into the distribution system.

6.3.2 CONVENTIONAL TREATMENT WITH CHLORINE DIOXIDE DISINFECTION

A schematic of a treatment system consisting of conventional treatment with chlorine dioxide disinfection is shown in figure 6-2. Here, a conventional treatment system has been modified so that chlorine dioxide replaces chlorine as the primary disinfectant and chloramines are used for post-disinfection. This combination of disinfectants is expected to reduce typical trihalomethane concentrations to the range of 20 to 50 mcg/l.

This system makes use of existing prechlorination facilities by incorporating them into the new chlorine dioxide generation facilities. The chlorine dioxide is added at the point of flash mixing. This process will not require changes in chemical feed points or in the plant's hydraulic profile. Because this treatment approach requires a relative minimum additional level of labor compared to the other processes presented in this section, it may be a viable alternative for smaller purveyors.

6.3.3 CONVENTIONAL TREATMENT WITH OZONE DISINFECTION AND GAC ADSORPTION

A schematic of a treatment system consisting of conventional treatment with ozone disinfection and GAC adsorption is shown in figure 6-3. Here, a conventional treatment system has been modified so that ozone replaces chlorine as the primary disinfectant, chloramines are used for postdisinfection

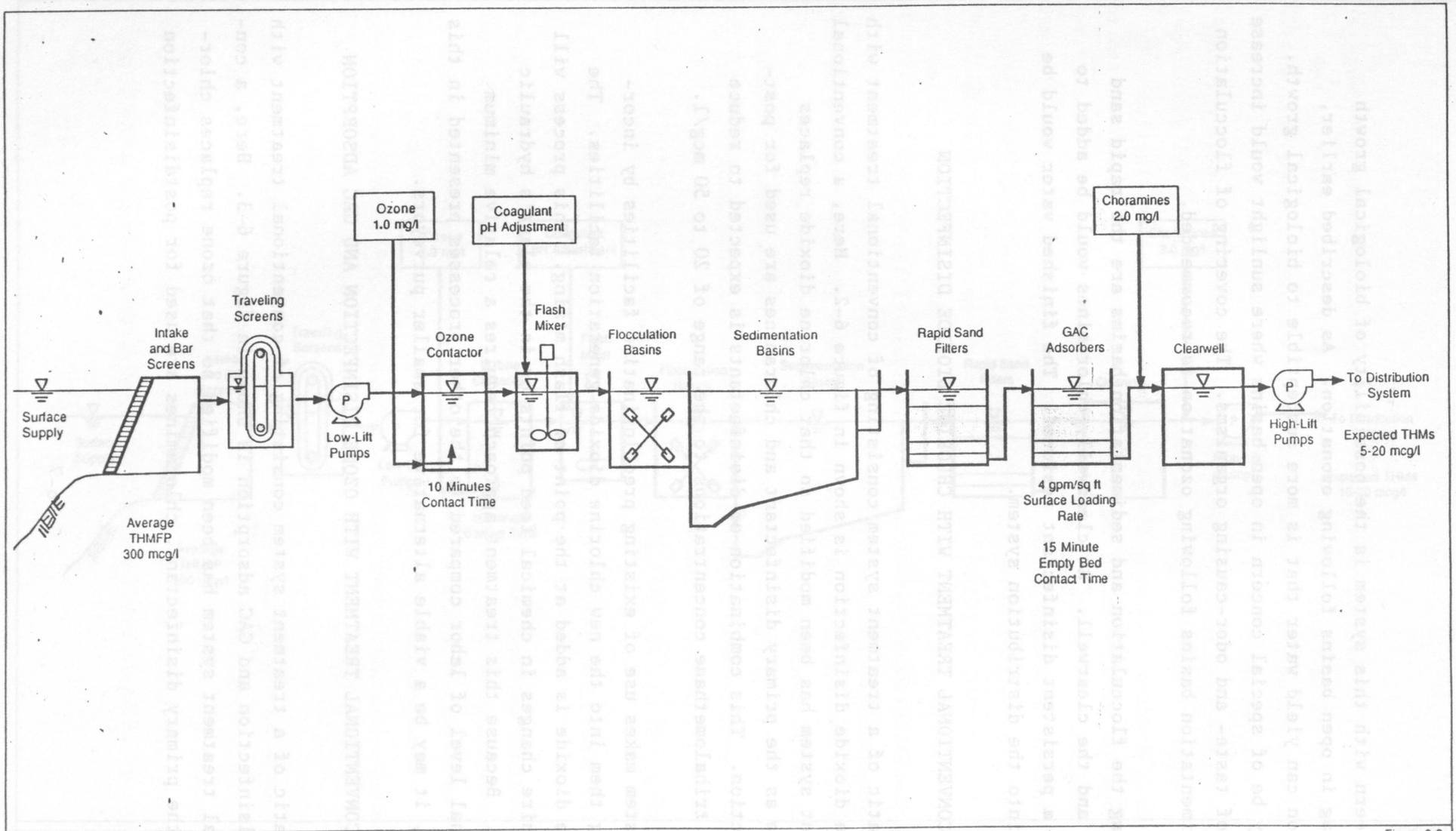

Figure 6-3

CDM
environmental engineers, scientists, planners & management consultants

Conventional Treatment Process Flow Schematic with Ozone Disinfection and GAC Adsorption

Prevention and Removal of Chlorination By-Products

and GAC adsorption follows filtration. This combination of disinfectants is expected to reduce typical trihalomethane concentrations at the plant effluent to the range of 5 to 20 mcg/l.

Ozone is added into a basin preceding the flash mixers, allowing a 10-minute contact time at full plant capacity. Addition of ozone contactors preceding the flash mixers is not expected to impose a great change in the plant hydraulics because most low-lift pumps can provide the additional few feet of head that would exist between the new ozone contactors and the existing flash mix basin.

The possibility of biological growth occurring in open basins following the ozonation step is of concern. As described earlier, ozonation can yield water that is more susceptible to biological growth. This may cause a problem in open basins where sunlight would increase growth of taste- and odor-causing organisms. The covering of flocculation and sedimentation basins following ozonation is recommended.

Following the flocculation and sedimentation basins and the rapid sand filters are the new GAC contactors. The GAC would ensure that the fragments of the ozonated, naturally occurring organics are removed before they contribute to distribution system regrowth.

Chloramines would be added preceding the clearwell to provide a persistent disinfectant residual. The finished water would be pumped into the distribution system.

While this approach affords a greater certainty of THM reduction than does a similar process excluding GAC, a concern will be the usage rate of carbon and its replacement cost. Additionally, if there is not enough hydraulic head available to permit gravity flow after conventional GAC contactors are inserted between the filters and the clearwell, postadsorption would require repumping or would require the design of low-head adsorbers. This would result in greater cost per gallon of water treated than conventionally designed adsorbers.

6.3.4 CONVENTIONAL TREATMENT WITH CHLORINE DIOXIDE DISINFECTION AND GAC ADSORPTION

A schematic of a treatment system consisting of conventional treatment with chlorine dioxide disinfection and GAC adsorption is shown in figure 6-4. Here, a conventional treatment system has been modified so that chlorine dioxide replaces chlorine as the primary disinfectant, chloramines are used for postdisinfection, and GAC adsorption follows filtration. This combination of disinfectants is expected to reduce typical trihalomethane concentrations to the range of 10 to 20 mcg/l.

This system makes use of existing prechlorination facilities by incorporating them into the new chlorine dioxide generation facilities. The chlorine dioxide is to be added at the existing point of chlorine addition. The chlorine dioxide/chlorine residual is maintained throughout the basins and the rapid sand filter. The unreacted chlorine from the generation of chlorine dioxide may result in low-level THM formation in the basins. After filtration, the GAC contactors remove unreacted chlorine, chlorine dioxide, and the inorganic disinfectant by-products (chlorate and chlorite), thereby reducing the THM formation potential of the water. Postdisinfection with chloramines is provided at the clearwell and carried into the distribution system.

As with the other treatment systems utilizing GAC adsorption, the usage rate of carbon would have to be determined by pilot testing. The usage rate of GAC for removal of chlorine dioxide by-products appears to be lower than that for organics removal; hence, the longevity should be greater. In either case, however, GAC should usually be replaced at least every 12 to 18 months owing to erosion and degradation of the carbon granuals.

Additionally, as with the previously discussed systems employing GAC adsorption, the same requirements for having sufficient head after the filters affect the retrofitting of this system. If there is not enough hydraulic head available to permit gravity flow after conventional GAC contactors are inserted between the filters and the clearwell, post-

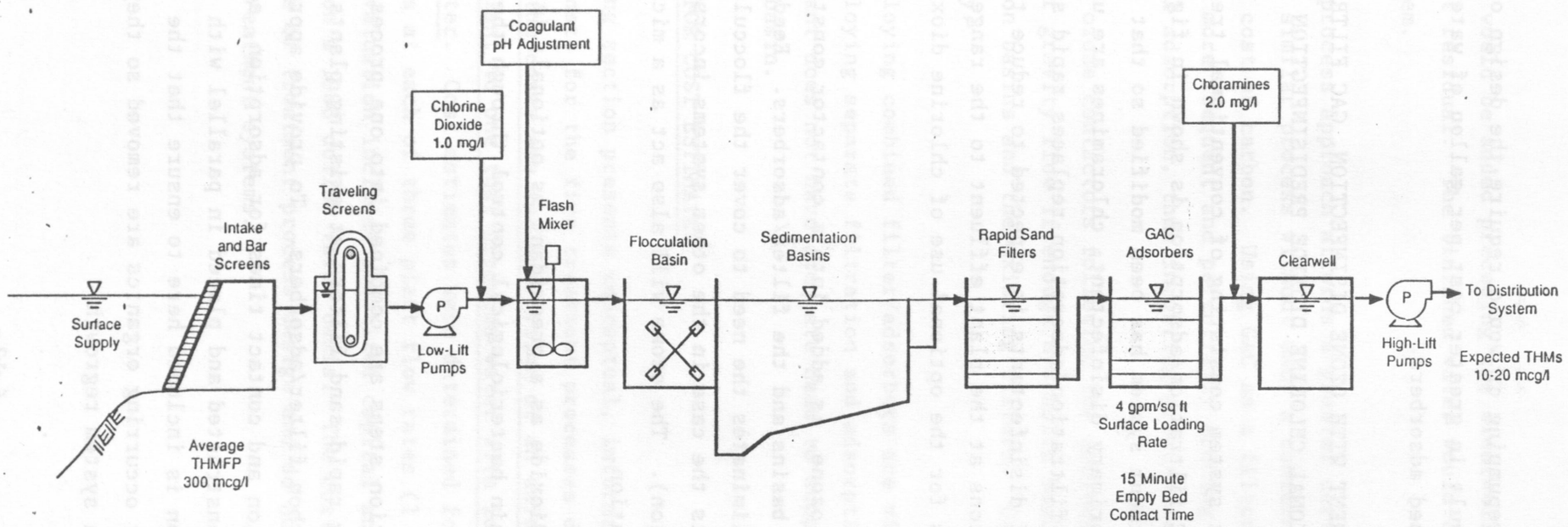

CDM
environmental engineers, scientists, planners & management consultants

Figure 6-4

Conventional Treatment Process Flow Schematic with Chlorine Dioxide Disinfection and GAC Adsorption

adsorption would require repumping or would require the design of low-head adsorbers: This would result in greater cost per gallon of water treated than conventionally designed adsorbers.

6.3.5 CONVENTIONAL TREATMENT WITH OZONE DISINFECTION, GAC FILTRATION/ADSORPTION AND OPTIONAL CHLORINE DIOXIDE PREDISINFECTION

A schematic of a treatment system consisting of conventional treatment with ozone disinfection and GAC filtration/adsorption is shown in figure 6-5. Here, a conventional treatment system has been modified so that ozone replaces chlorine as the primary disinfectant, chloramines are used for postdisinfection, and GAC filtration/adsorption replaces rapid sand filtration. This combination of disinfectants is expected to reduce typical trihalomethane concentrations at the plant effluent to the range of 5 to 20 mcg/l. This system allows for the optional use of chlorine dioxide for predisinfection.

The primary disinfectant, ozone, is added into a contactor constructed between the sedimentation basins and the filter/adsorbers. Feeding ozone following sedimentation eliminates the need to cover the flocculation and sedimentation basins (as is the case in the other systems incorporating ozone prior to sedimentation). The ozone will also act as a microflocculant prior to filtration.

The addition of chlorine dioxide as a preoxidant is optional; it may be used, as needed, to maintain bacteriological control through the first half of the plant.

The filtration and adsorption steps are combined into one process step in this system. The existing rapid sand filters at existing plants can be converted to activated carbon filter/adsorbers. To provide appropriate loading rates for filtration and contact times for adsorption, additional basins would have to be constructed and placed in parallel with the existing basins. GAC adsorption is included here to ensure that the fragments of the ozonated, naturally occurring organics are removed so they do not contribute to distribution system regrowth.

Chloramines would be added preceding the clearwell to provide a persistent disinfectant residual. The finished water would be pumped into the distribution system.

While this process approach affords a greater certainty of THM reduction than does a similar process without GAC, a concern will be the usage rate replacement cost of carbon. Using GAC as a filter media will expose the granuals to more frequent and potentially eroding backwashing than does conventional adsorption, thus incurring greater carbon replacement costs.

Addition of ozone contactors following the sedimentation basins can take advantage of gravity flow if enough hydraulic head is available between the sedimentation basins and the existing filters. Otherwise, repumping would be necessary.

Systems employing combined filter/adsorbers are viable alternatives to systems employing separate filtration and adsorption basins when the existing plant does not have adequate head to support flow through an additional basin.

6.4 BASIS FOR COST ESTIMATES

The following section presents conceptual, informational level capital and operating costs for the five treatment processes described above. For all processes, the costs are for conversion of an existing, conventional treatment plant to one that produces water with lower THM levels in the finished water. Cost estimates were determined for each of the five treatment systems at each of three plant flow rates (1 mgd, 10 mgd and 50 mgd). Each cost evaluation includes amortized capital and annual operating costs determined on a 1988 dollar value basis. The costs are based on standard applications of treatment process design and do not consider use of "package" treatment systems.

6.4.1 COST ESCALATION FACTORS

The equipment construction costs used in this chapter come from a variety of sources (as described in the following section) and represent costs at differing time periods. The older costs were updated to a May 1988 basis.

The method used for updating the construction costs uses the Engineering News-Record (ENR) Construction Cost Index (CCI). The ENR CCI is based on a 1913 CCI equal to 100. The general formula for updating a construction cost is:

$$\text{Updated Cost} = \text{Old Cost} \times (\text{Current CCI}/\text{Old CCI})$$

The usefulness of the cost data contained in this report will be maintained if the reader updates the costs from the date of preparation (May 1988, ENR CCI=4493) to the date of use, using the following formula:

$$\text{Updated Cost} = \text{Cost in this report} \times (\text{current CCI}/4493)$$

6.4.2 AMORTIZATION OF CAPITAL COSTS

The capital cost for a water treatment plant improvement is usually paid for with borrowed funds. The annual payments required to pay back these funds is computed with the following equation:

$$R = \frac{Ai}{1-(1+i)^{-n}}$$

This equation calculates the annual payment (R) that would amortize the debt (A) over the expected plant life (n) in years with a uniform interest rate (i). In this report, a 20-year amortization period (n) has been selected, a uniform 8 percent interest rate (i) has been assumed, and costs are presented in 1988 dollars.

6.4.3 EQUIPMENT ASSUMPTIONS

Capital costs presented for each treatment arrangement include chemical generation equipment, chemical feed equipment, chemical storage facilities, instrumentation and building facilities. All treatment plants are assumed to have existing chlorination facilities that are of adequate capability to be incorporated into the new chloramine and/or chlorine dioxide feed systems.

Ozone, chlorine dioxide, and chloramine equipment costs are based on sizing the systems to provide a maximum chemical dosage rate that is two times the average dosage rate.

Average installed equipment prices are presented for chemical generation equipment, feed equipment, storage facilities, and instrumentation.

Chemical storage facility costs are based on sizing the facilities to handle a 30-day supply of the chemical.

The costs of buildings were based on the following assumptions: no site work is required, structures are sized to house equipment and storage vessels, existing chlorine feed equipment and storage facilities do not require additional housing facilities, and unit costs for buildings is $150/sq ft of floor area.

6.5 TREATMENT PROCESS CAPITAL COSTS

The basis for estimates of the capital costs of each treatment technology are presented below.

6.5.1 OZONE DISINFECTION/OXIDATION

Ozone equipment is sized for a maximum dosage of 2 mg/l, which requires ozone feed rates of 17 lb/day, 170 lb/day, and 840 lb/day for the 1-mgd, 10-mgd and 50-mgd plants, respectively. Costs for ozone generation

facilities were determined from price quotes from equipment manufacturers and distributors, specifically Griffin Technics Inc. and Capitol Controls.

Equipment prices for ozone systems include the following items:

- o Air filtration/drying unit
- o Ozone generator
- o Electrical converter/controller and process control units
- o Ozone destruction unit

These raw equipment costs are multiplied by a factor of 2.0 to account for delivery and installation costs, for contact chamber diffusers, and for monitoring instrumentation.

Ozone contactor price estimates assume a cost for concrete work of $2.00/gallon of capacity. Contactor capacities are calculated to provide a 10-minute detention time for each given flow rate.

Building costs are calculated based on the housing of all new equipment.

The capital costs are shown in table 6-1.

6.5.2 CHLORINE DIOXIDE DISINFECTION/OXIDATION

Chlorine dioxide equipment is sized for a maximum dosage of 2 mg/l. This requires raw chemical feed rates of 9 lb/day, 90 lb/day, and 450 lb/day of chlorine gas and 91 lb/day, 910 lb/day, and 4,560 lb/day of sodium chlorite for plant capacities of 1 mgd, 10 mgd, and 50 mgd, respectively. Costs for chlorine dioxide generation facilities were determined from equipment manufacturers and distributors, specifically Fischer & Porter, Capital Controls Company, Inc., and Drew Chemicals.

Equipment prices for chlorine dioxide generation include the chemical reaction column and automatic control systems for the 10-mgd and 50-mgd capacity plants. The costs are multiplied by a factor of 2.0 to account for

TABLE 6-1

Capital Costs for Ozone Facilities

Item	Plant Capacity		
	1 mgd	10 mgd	50 mgd
Ozone generation (air preparation, power and generator equipment)	$185,000	$365,000	$1,200,000
Ozone contactor	$14,000	$140,000	$700,000
Off gas destruct unit	$20,000	$40,000	$240,000
Building	$44,000	$200,000	$925,000
Total costs	$263,000	$745,000	$3,065,000

Note: Cost presented are May 1988 dollars; ENR CCI = 4493.

delivery and installation charges. No costs are included for sodium chlorite chemical storage because the raw chemicals are fed from the delivered containers. The cost of the equipment and storage facilities is a major portion of the capital costs. These costs are summarized in table 6-2.

6.5.3 CHLORAMINE POSTDISINFECTION

The chloramination facilities are sized for a maximum dosage of 4 mg/l. This requires raw chemical feed rates of 23.5 lb/day, 235 lb/day and 1,175 lb/day for chlorine gas for the 1-mgd, 10-mgd and 50-mgd plants. Aqua ammonia (ammonium hydroxide) will be fed as a liquid at a rate of 20 lb/day at the 1-mgd facility. Anhydrous ammonia will be fed as a gas at a rate of 56 lb/day and 280 lb/day at the 10-mgd and 50-mgd facilities, respectively.

Equipment costs include the ammonia feeders, storage vessels, instrumentation, electrical and HVAC work, and building construction costs. These costs are based upon average current prices. Table 6-3 presents the capital costs for chloramination facilities.

6.5.4 GRANULAR ACTIVATED CARBON ADSORPTION AND FILTRATION/ADSORPTION

Carbon contactors are sized for empty bed contact times of 15 minutes minimum and a surface loading rate of 4 gpm/sq ft for adsorption and 2 gpm/sq ft for filtration/adsorption. The total carbon contactor volumes required for either filtration or filtration/adsorption are 1,500 sq ft, 15,000 sq ft, and 75,000 sq ft for the 1-mgd, 10-mgd and 50-mgd facilities. The required carbon for each plant will be 40,000 lbs, 400,000 lbs and 2,000,000 lbs, respectively.

In determining the cost of converting existing filters to filter/adsorbers, it was assumed that the existing filters were designed for a surface loading rate of 4 gpm/sq ft. Therefore, after converting them to filter/adsorbers rated at 2 gpm/sq ft, to maintain the plant throughput, a number of new filter/adsorbers must be constructed in a quantity equal to the existing filters.

TABLE 6-2

Capital Costs for Chlorine Dioxide Facilities

Item	Plant Capacity 1 mgd	10 mgd	50 mgd
Chlorine dioxide generation equipment (control panel or skid, reaction chamber, chemical feed equipment)	$20,000	$30,000	$100,000
Feed lines	$1,000	$4,000	$6,000
Electrical	$1,500	$3,000	$5,000
HVAC	$3,000	$8,000	$16,000
Building	$22,500	$60,000	$135,000
Total costs	$48,000	$105,000	$262,000

Note: Cost presented are May 1988 dollars; ENR CCI = 4493.

TABLE 6-3

Capital Costs for Chloramine Facilities

Item	Plant Capacity		
	1 mgd	10 mgd	50 mgd
Ammonia feed equipment	$10,000*	$20,000	$40,000
Feed lines	$1,000	$4,000	$6,000
Instrumentation and electrical	$3,000	$6,000	$10,000
Chemical analyzer	$3,000	$6,000	$8,000
HVAC	$4,000	$10,000	$20,000
Building	$9,000	$60,000	$90,000
Total costs	$30,000	$106,000	$174,000

* Price includes liquid ammonia storage facilities and feed pump.

Note: Cost presented are May 1988 dollars; ENR CCI = 4493.

The carbon cost for initial charge and for yearly replacement was taken to be $0.70/lb for virgin carbon. Capital costs for the contactor were obtained from the New Jersey Special Water Treatment Study - Phase II Final Report (Camp Dresser & McKee 1988) construction cost graphs for concrete, gravity-fed contactors that were updated from the EPA cost estimation curves (Gumerman et al. 1979). Costs for the GAC filtration/adsorption facilities include the costs for conversion of existing rapid sand filters to GAC filter/adsorbers and costs for constructing an equal number of new filter/adsorbers. The cost for conversion came from the EPA curves (Gumerman et al. 1987). Table 6-4 presents the capital costs of GAC adsorption facilities. Table 6-5 presents the capital costs of GAC filter/adsorber facilities.

6.6 OPERATING COSTS

The operating costs for the alternative treatment arrangements include the annual operation and maintenance expenses incurred for delivering the average disinfectant dosage rates as specified. Raw chemicals and electricity for ozone generation were the primary operating cost factors, along with granular activated carbon replacement costs. Chlorine chemical costs are included in the operating costs for chlorine dioxide and chloramine generation. Operating cost assumptions tabulated in table 6-6, are computed based upon average 1988 prices quoted by chemical suppliers to the New Jersey area. Ozone generation costs are, based upon average energy consumption costs for ozone generated from air multiplied by average utility costs in New Jersey. Replacement of the granular activated carbon is estimated to be at yearly intervals based upon the assumption of a 0.1 lb/1,000 gallon usage rate, which is representative for dechlorination and TOC removal.

Maintenance costs include labor costs and parts and supplies costs. Parts and supplies costs were assumed to be incurred annually at 5 percent of equipment capital cost. Chemical handling costs were based upon estimated daily man-hour requirements and a pay rate of $15/hour. Handling requirements are detailed below. Costs of pumping the chemicals are nominal; therefore, they are not included for the purposes of this study.

TABLE 6-4

Capital Costs for GAC Adsorber Facilities

Item	Plant Capacity		
	1 mgd	10 mgd	50 mgd
Granular activated carbon	$28,000	$280,000	$1,400,000
Concrete contactors	$234,000	$1,381,000	$5,100,000
Total costs	$262,000	$1,661,000	$6,500,000

Note: Cost presented are May 1988 dollars; ENR CCI = 4493.

TABLE 6-5

Capital Costs for GAC Filter/Adsorber Facilities

Item	Plant Capacity 1 mgd	10 mgd	50 mgd
Granular activated carbon	$28,000	$280,000	$1,400,000
Conversion of existing filters plus construction of new adsorbers	$232,000	$870,000	$4,350,000
Total costs	$260,000	$1,150,000	$5,750,000

Note: Cost presented are May 1988 dollars; ENR CCI = 4493.

TABLE 6-6

Raw Chemical Cost and Chemical Generation Cost Assumptions

Name/Formula	Feed Form	Solution Strength	Container	Price ($/lb)
Sodium Chlorite/ $NaClO_2$	liquid	25%	55 gal drum	0.65
Chlorine/ Cl_2	gas	~100%	150 lb cylinder 2000 lb cylinder	0.50 0.25
Anhydrous Ammonia/ NH_3	gas	99.5%	150 lb cylinder 1000 gal tank	1.22 0.10
Aqua Ammonia/ NH_4OH	liquid	28%	55 gal drum	0.1275
Ozone/ O_3	gas			1.50
Granular activated carbon (virgin)				0.70

Note: Cost presented are May 1988 dollars; ENR CCI = 4493.

Presented below are the basis upon which operating costs were evaluated for each treatment technology.

6.6.1 OZONE DISINFECTION/OXIDATION

Ozonation generation utilizing an air feed and off-gas destruction is estimated to use 14 kwh/lb ozone generated, as referenced by ozone generator manufacturers' literature. New Jersey utility rates are assumed to be $0.107/kwh as an average throughout the state. Therefore, ozone generation costs are assumed to be $1.50/lb. The cost of recharging the desiccant in the air preparation equipment is nominal and is not included.

Labor required for operation and maintenance is assumed to be 2 hr/day at a 1-mgd plant, 4 hr/day at a 10-mgd plant, and 8 hr/day at a 50-mgd plant. Costs calculations were based upon 7 days/week and an operator cost of $15.00/hr. Parts costs were assumed to be 5 percent of the ozone equipment costs. Table 6-7 presents the associated operating costs of the ozonation process.

6.6.2 CHLORINE DIOXIDE DISINFECTION/OXIDATION

The cost estimate for generation of chlorine dioxide assumes that chlorine gas will be reacted with a 25 percent sodium chlorite solution. A gaseous chlorine price of $0.50/lb for 150-lb cylinders is used for the 1-mgd plant, and a price of $0.25/lb for 1-ton cylinders is used for the 10-mgd and 50-mgd plants. The price of sodium chlorite is assumed to be $0.65/lb as delivered in drums. These prices result in chlorine dioxide costs of $3.75/lb for the 1-mgd facility, and $3.62/lb for the 10-mgd and 50-mgd facilities.

Labor required for operation and maintenance is assumed to be 1 hr/day at a 1-mgd plant, 2 hr/day at a 10-mgd plant and 6 hr/day at a 50-mgd plant. Cost calculations are for a 7-day work week and operator costs of $15.00/hr. Supply costs are assumed to be 5 percent of the chlorine dioxide generation equipment costs. The operating costs are presented in table 6-8, based upon the addition of sodium chlorite to chlorine.

TABLE 6-7

Annual Operating Costs for Ozone Facilities

Item	Plant Capacity		
	1 mgd	10 mgd	50 mgd
Ozone generation	$4,650	$46,500	$233,000
Labor costs	$10,920	$21,840	$43,680
Parts and supplies	$9,000	$27,000	$72,000
Total annual operating costs	$24,570	$95,340	$348,680

Note: Cost presented are May 1988 dollars; ENR CCI = 4493.

TABLE 6-8

Annual Operating Costs for Chlorine Dioxide Facilities

Item	Plant Capacity 1 mgd	10 mgd	50 mgd
Raw chemicals (Sodium hypochlorite, chlorine gas)	$11,640	$112,300	$561,500
Labor costs	$5,460	$10,920	$32,760
Parts and supplies	$200	$1,500	$2,500
Total annual operating costs	$17,300	$124,720	$596,760

Note: Cost presented are May 1988 dollars; ENR CCI = 4493.

6.6.3 CHLORAMINE POSTDISINFECTION

Chloramines are formed for postdisinfection by the addition of chlorine gas and ammonia at a 4:1 weight ratio. A gaseous chlorine price of $0.50/lb for 150-lb cylinders is used for the 1-mgd plant, and a price of $0.25/lb for 1-ton cylinders is used for the 10-mgd and 50-mgd plants. A 28 percent aqua ammonia solution is used in the 1-mgd plant at a price of $0.1275/lb. Anhydrous ammonia is used in the 10-mgd and 50-mgd plants at a price of $0.10/lb. These raw chemical prices yield chloramine costs of $0.84/lb for the 1-mgd facility and $0.38/lb for the 10-mgd and 50-mgd facilities.

The required labor for operation and maintenance is assumed to be 1 hr/day for a 1-mgd plant, 2 hr/day for a 10-mgd plant and 6 hr/day for a 50-mgd plant. Cost calculations are for a 7-day work week and operator costs of $15.00/hr. Also parts and supplies are calculated to be incurred annually at 5 percent of the chemical feed equipment capital cost. Table 6-9 shows the operating costs of chloramination.

6.6.4 GRANULAR ACTIVATED CARBON ADSORPTION AND FILTRATION/ADSORPTION

Operating costs for GAC adsorption include yearly carbon replacement costs and labor costs for maintenance of GAC adsorbers. The GAC filtration/adsorption operating costs include carbon replacement costs for all filter/adsorbers, but only the labor costs for maintenance of the new filter/adsorbers. The maintenance cost for the filter/adsorbers is computed in this way based on the assumption that the filter/adsorbers, which were converted, will not require more labor than previously. A labor cost for GAC treatment of $0.02/1,000 gallons produced on a daily basis, as recommended in the SWTS-II (Camp Dresser & McKee 1988), is used for maintenance cost. Replacement of the GAC is estimated to be at yearly intervals based on the assumption of a 0.1 lb/1,000 gallon usage rate, which is representative for dechlorination and TOC removal. Annual operating costs for GAC adsorption are presented in table 6-10, and for GAC filtration/adsorption, in table 6-11.

TABLE 6-9

Annual Operating Costs for Chloramine Facilities

Item	Plant Capacity 1 mgd	10 mgd	50 mgd
Raw chemicals (aqua ammonia, anhydrous ammonia, chlorine gas)	$5,220*	$23,500	$117,500
Labor costs	$5,460	$10,920	$32,760
Parts and supplies	$500	$1,000	$2,000
Total annual operating costs	$11,180	$35,420	$152,260

* Anhydrous ammonia cost are prohibitive for smaller facility; therefore, aqua ammonia is used for pricing.

Note: Cost presented are May 1988 dollars; ENR CCI = 4493.

TABLE 6-10

Annual Operating Costs for GAC Adsorption Facilities

Item	Plant Capacity 1 mgd	10 mgd	50 mgd
Carbon replacement	$28,000	$280,000	$1,400,000
Labor	$7,300	$73,000	$365,000
Total annual operating costs	$35,300	$353,000	$1,765,000

Note: Cost presented are May 1988 dollars; ENR CCI = 4493.

TABLE 6-11

Annual Operating Costs for GAC Filtration/Adsorption

Item	Plant Capacity		
	1 mgd	10 mgd	50 mgd
Carbon replacement	$28,000	$280,000	$1,400,000
Labor	$3,650	$36,500	$182,000
Total annual operating costs	$31,650	$316,500	$1,582,000

Note: Cost presented are May 1988 dollars; ENR CCI = 4493.

6.7 TREATMENT ARRANGEMENT COST COMPARISONS

The total capital and annual operating costs associated with each of the five proposed treatment arrangements are tabulated in tables 6-12, 6-13 and 6-14 for 1-mgd, 10-mgd and 50-mgd plants, respectively. Total capital costs are amortized as discussed in section 6.2.2. Table 6-15 presents the total of the amortized capital and annual operating costs for each treatment arrangement at all three plant capacities studied.

6.8 ASSESSMENT OF RESULTS

Referring to table 6-15, it is evident that the amortized capital costs associated with the first treatment system arrangement, ozonation at a conventional treatment plant, are higher than the costs of the second treatment alternative, use of chlorine dioxide at a conventional treatment plant, in all plant sizes studied. The operating costs are comparable for the 1-mgd plants. However, there are operating cost savings for ozone use compared to chlorine dioxide use at the 10-mgd and 50-mgd facilities. The savings in operating cost make ozone a comparable alternative at higher plant capacities.

The addition of the activated carbon process to either of the above two processes incurs a large expense for retrofitting the existing facilities; however, it also provides better THM reduction.

Amortized capital costs are considerably lower for the chlorine dioxide and GAC adsorption treatment system than for the ozonation and GAC system, with the most apparent difference at the 1-mgd plant. However, the operating costs for the use of chlorine dioxide are substantial; at the larger plant capacity, the two arrangements incur nearly equal annual costs.

The last alternative makes use of existing facilities to reduce the costs of postadsorption. Capital costs for the use of ozonation with GAC filtration/adsorption are lower at the larger plants than those for the processes employing ozonation and GAC adsorption. (Converting filters to filter/absorbers eliminates the cost of constructing some new GAC basins.)

TABLE 6-12

Conversion Cost Estimates for Five Treatment Arrangements at a 1 MGD Facility

Treatment Arrangement	Process	Total Capital Costs	Annual Operating Costs
1	Ozonation	$263,000	$25,000
	Chloramination	$30,000	$11,000
	Total	$293,000	$36,000
2	Chlorine Dioxide	$48,000	$17,000
	Chloramination	$30,000	$11,000
	Total	$78,000	$28,000
3	Ozonation	$263,000	$25,000
	GAC Adsorption	$262,000	$35,000
	Chloramination	$30,000	$11,000
	Total	$555,000	$71,000
4	Chlorine Dioxide	$48,000	$17,000
	GAC Adsorption	$262,000	$35,000
	Chloramination	$30,000	$11,000
	Total	$340,000	$63,000
5	Ozonation	$263,000	$25,000
	GAC Filtration/Adsorption	$260,000	$32,000
	Chloramination	$30,000	$11,000
	Optional Chlorine Dioxide	$48,000	$0
	Total	$601,000	$68,000

Note: Cost presented are May 1988 dollars; ENR CCI = 4493.

TABLE 6-13

Conversion Cost Estimates for Five Treatment Arrangements at a 10 MGD Facility

Treatment Arrangement	Process	Total Capital Costs	Annual Operating Costs
1	Ozonation	$745,000	$95,000
	Chloramination	$106,000	$35,000
	Total	$851,000	$130,000
2	Chlorine Dioxide	$105,000	$125,000
	Chloramination	$106,000	$35,000
	Total	$211,000	$160,000
3	Ozination	$745,000	$95,000
	GAC Adsorption	$1,661,000	$353,000
	Ckloramination	$106,000	$35,000
	Total	$2,512,000	$483,000
4	Chlorine Dioxide	$105,000	$125,000
	GAC Adsorption	$1,661,000	$353,000
	Chloramination	$106,000	$35,000
	Total	$1,872,000	$513,000
5	Ozonation	$745,000	$95,000
	GAC Filtration/Adsorption	$1,150,000	$316,000
	Chloramination	$106,000	$35,000
	Optional Chlorine Dioxide	$150,000	$0
	Total	$2,106,000	$446,000

Note: Cost presented are May 1988 dollars; ENR CCI = 4493

TABLE 6-14

Conversion Cost Estimates for the Five Treatment Arrangements at a 50 MGD Facility

Treatment Arrangement	Process	Total Capital Costs	Annual Operating Costs
1	Ozonation	$3,065,000	$349,000
	Chloramination	$174,000	$152,000
	Total	$3,239,000	$501,000
2	Chlorine Dioxide	$262,000	$597,000
	Chloramination	$174,000	$152,000
	Total	$436,000	$749,000
3	Ozonation	$3,065,000	$349,000
	GAC Adsorption	$6,500,000	$1,765,000
	Chloramination	$174,000	$152,000
	Total	$9,739,000	$2,266,000
4	Chlorine Dioxide	$262,000	$597,000
	GAC Adsorption	$6,500,000	$1,765,000
	Chloramination	$174,000	$152,000
	Total	$6,936,000	$2,514,000
5	Ozonation	$3,065,000	$349,000
	GAC Filtration/Adsorption	$5,750,000	$1,582,000
	Chloramination	$174,000	$152,000
	Optional Chlorine Dioxide	$262,000	$0
	Total	$9,251,000	$2,083,000

Note: Cost presented are May 1988 dollars; ENR CCI = 4493

TABLE 6-15

Combined Amortized Capital and Annual Operating Cost Estimations for Five Treatment Arrangements at Three Plant Capacities

Treatment Arrangement	Type of Cost	Plant Capacity 1 mgd	10 mgd	50 mgd
1. Ozonation and chloramination	Amortized capital	$30,000	$87,000	$330,000
	Operating	$36,000	$130,000	$501,000
	Total annual	$66,000	$217,000	$831,000
2. Chlorine dioxide and chloramination	Amortized capital	$8,000	$21,000	$44,000
	Operating	$28,000	$160,000	$749,000
	Total annual	$36,000	$181,000	$793,000
3. Ozonation, GAC adsorption and chloramination	Amortized capital	$57,000	$256,000	$992,000
	Operating	$71,000	$483,000	$2,266,000
	Total annual	$128,000	$739,000	$3,258,000
4. Chlorine dioxide, GAC adsorption and chloramination	Amortized capital	$35,000	$191,000	$706,000
	Operating	$63,000	$513,000	$2,514,000
	Total annual	$98,000	$704,000	$3,220,000
5. Ozonation, GAC adsorption/filtration, chloramination and optional chlorine dioxide	Amortized capital	$61,000	$214,000	$942,000
	Operating	$68,000	$446,000	$2,083,000
	Total annual	$129,000	$660,000	$3,025,000

Note: All costs are rounded to the nearest $1000.
Costs presented are May 1988 dollars; ENR CCI = 4493.

The operating costs are also lower, providing a slightly more economical alternative at the larger facilities. However, at the 1-mgd facility, the cost associated with the conversion of existing filters is equal to that of the construction of new filters.

(47)

TABLE 6-15

Combined Amortized Capital and Annual Operating Cost Estimations for Five Treatment Arrangements at Three Plant Capacities

Treatment Arrangement	Type of Cost	Plant Capacity 1 mgd	10 mgd	50 mgd
1. Ozonation and chloramination	Amortized capital	$30,000	$97,000	$330,000
	Operating	$36,000	$120,000	$501,000
	Total annual	$66,000	$217,000	$831,000
2. Chlorine dioxide and chloramination	Amortized capital	$8,000	$21,000	$44,000
	Operating	$28,000	$160,000	$746,000
	Total annual	$36,000	$181,000	$790,000
3. Ozonation, GAC adsorption and chloramination	Amortized capital	$57,000	$256,000	$892,000
	Operating	$71,000	$483,000	$2,296,000
	Total annual	$128,000	$739,000	$3,258,000
4. Chlorine dioxide, GAC adsorption and chloramination	Amortized capital	$35,000	$191,000	$706,000
	Operating	$63,000	$519,000	$2,514,000
	Total annual	$98,000	$704,000	$3,220,000
5. Ozonation, GAC adsorption, chloramination and optional chlorine dioxide	Amortized capital	$61,000	$214,000	$942,000
	Operating	$68,000	$446,000	$2,083,000
	Total annual	$129,000	$660,000	$3,025,000

Note: All costs are rounded to the nearest $1000.
Costs presented are May 1988 dollars; ENR CCI = 4493.

Section 7

7.0 SUMMARY AND CONCLUSIONS

Free chlorine is widely used in water treatment because it is versatile effective, and inexpensive. Chlorine has a long history of use as a disinfectant, and sometimes is used to reduce taste, odor, and color in untreated water. In the United States, chlorine is the most widely used disinfectant.

Health effects research has indicated that use of chlorine in water treatment can lead to the formation of compounds that may be carcinogenic in humans. These compounds are generally referred to as chlorination by-products. Of major concern are a class of chlorination by-products called trihalomethanes (THM). Their presence in waters treated with free chlorine is pervasive.

7.1 LOWER STANDARDS CONTEMPLATED FOR DISINFECTION BY-PRODUCTS

The federal government now limits the level of THMs in drinking water to 0.10 milligrams per liter (mg/l). The U.S. Environmental Protection Agency (EPA) will eventually promulgate an even lower standard for THMs as a consequence of the 1986 Amendments to the Safe Drinking Water Act.

The New Jersey Department of Environmental Protection (NJDEP) is also expected to issue revised statewide standards. NJDEP is considering a maximum contaminant level (MCL) that would limit total THMs in drinking water to as low as 20 micrograms per liter (mcg/l) and any single THM to 5 mcg/l. This level of regulation would be more stringent than the present federal limit.

This study addresses the feasibility of implementing the more stringent levels contemplated by NJDEP. It also provides information to NJDEP on the extent of THM presence in drinking water supplies in the state, on available technologies and associated costs for THM reduction, and on any anticipated obstacles to control of THMs. NJDEP will use this information to guide policy decisions regarding the control of THMs.

7.2 FEASIBILITY OF MEETING STRICTER STANDARDS

Available information on the prevalence of chlorination by-products in New Jersey drinking water supplies was supplemented with a questionnaire survey of New Jersey water purveyors. This information was used to help evaluate the feasibility of meeting the stricter standards for THMs. (Pertinent findings are presented in section 2.0.)

Ground Water Purveyors

Trihalomethane levels in treated ground water have generally been very low, typically below 10 mcg/l in New Jersey. Ground water purveyors should be able to meet the suggested standards with little or no modifications to current treatment processes.

Surface Water Purveyors

Chlorination by-products are pervasive in New Jersey drinking water supplies taken from surface sources. Most purveyors of treated surface waters will have to make substantial changes in their water treatment practices in order to meet the stricter standards. They will need information on the feasibility of compliance, methods to achieve compliance, and the costs of compliance in order to achieve this goal.

The ability of treatment plants to control formation of chloroform is a useful yardstick for measuring the feasibility of compliance. Chloroform is the largest component of the THMs formed by use of chlorine to disinfect surface water supplies in New Jersey. Experience with treatment of surface waters from river basins throughout the Northeast confirms this finding. Formation of chloroform predominates, under different treatment schemes, and in different drainage basins. It also has been observed that, regardless of the concentration of total THMs, chloroform tends to predominate.

Thus, a purveyor's ability to meet the 5 mcg/l standard for chloroform is a valid measure of the ability to comply with the most stringent contemplated standards. The 5 mcg/l standard for any individual THM represents a more

restrictive condition than the 20 mcg/l standard for total THMs. Under the regulatory framework being suggested by NJDEP's Drinking Water Quality Institute, the total THMs will very likely remain under the 20 mcg/l standard if the standard of 5 mcg/l of chloroform is adhered to. It can be expected that total THM values between 6 mcg/l and 15 mcg/l will be found throughout the state if the regulation is implemented and complied with.

7.3 IMPLICATIONS FOR PURVEYORS

The current level of knowledge of THM formation in New Jersey surface water treatment plants is not yet complete enough to address all of the implications of stricter regulations on water purveyors. At this time, it is possible to provide only general recommendations to guide surface water purveyors in meeting lower standards. Evaluation of individual treatment plants, possibly including pilot plant studies, and site-specific solutions will be required.

Generally, THMs can be controlled by reducing THM precursors before the THMs are formed, or by using treatment to remove the THMs after they are formed. THM formation can be reduced by using alternatives to chlorine, by making changes in existing water treatment practices (such as moving the point of disinfection), and by using different treatment processes.

Use of Alternatives to Chlorine

A number of possible alternatives to chlorine -- ozone, chlorine dioxide, chloramines, and potassium permanganate -- are available to water purveyors. (The disinfection properties, historical use, and practical concerns purveyors will have to consider before using these alternative disinfectants are presented in section 3.)

Use of potassium permanganate as the primary disinfectant is not recognized as an acceptable practice by NJDEP and most other state authorities. In addition, the National Research Council characterizes potassium permanganate as a poor bactericide. There is no reliable data on its effects on

viruses or protozoan cysts. For these reasons, potassium permanganate is not a viable alternative to chlorine for disinfection.

Future minimum standards for disinfection will have to be considered by purveyors in determining which of the three remaining alternative disinfectants discussed here are applicable to a specific treatment situation. Under new regulations to be proposed by EPA, a purveyor attempting to address proposed THM standards will not be able to arbitrarily reduce the level of disinfectant dosage or the contact time without considering the new disinfection standards.

These new disinfection standards will further constrain the purveyors' use of alternative disinfectants to meet proposed THM standards. Based on review of the proposed regulations, the following assessment was made regarding the applicability of the alternative disinfectants:

Chloramines: The use of chloramines for the principal deactivation step will probably be impractical considering proposed EPA regulations. However, increased use of chloramines as a post-disinfectant is likely.

Chlorine dioxide: Because of the toxicological effects of inorganic by-products of chlorine dioxide -- chlorates and chlorites -- the federal government recommends that the maximum dosage be limited to 1.0 mg/l. Coupled with this limit on dosage, the regulations under consideration by EPA make chlorine dioxide difficult to use as a primary disinfectant, except where contact times of relatively long duration are possible.

Ozone: Although it does not leave a lasting residual, under many circumstances ozone will be ideal for the principal deactivation step. Ozone can also have a beneficial effect on filtration due to its tendency to provide microflocculation. However, the costs are higher than other approaches for smaller plants.

Treatment for Removal of THMs

Several treatment processes -- coagulation, modification of chlorination practices, pH adjustment, activated carbon adsorption, reverse osmosis, and air stripping -- were evaluated for their ability to remove THMs, or to

remove THM precursors before THMs are formed. While many of these processes can reduce THM formation, none would be capable of practically achieving sufficient THM reduction if use of free chlorine as the primary disinfectant continued.

Process changes can certainly help in meeting the contemplated standards. With use of free chlorine, however, it is generally very difficult to reduce trihalomethane formation potential to a level that insures consistent compliance with the standards contemplated, particularly for any single THM.

If traditional approaches to treatment are maintained in New Jersey, facilities treating water from a surface supply probably will not be able to meet a standard of 5 mcg/l of chloroform with the use of free chlorine as the principal disinfectant. Although it may be possible, under some circumstances, to use free chlorine for postdisinfection, in most cases the use of free chlorine would be totally precluded.

Need for Alternative Strategies

No single panacea exists for control of THMs. The problem is too complex for simple solutions. It would not be sufficient, for example, to simply replace chlorination with another method of disinfection. Rather, strategies combining use of alternative disinfectants, changing the point of disinfection, or modifying the treatment process are called for.

Purveyors must meet all drinking water standards -- for organics, inorganics, and microbiology. Methods for meeting standards in one area may impact on the ability to meet standards in another. For example, a common remedy to improve the bacteriological quality of water is to increase the dosage of chlorine. But this will almost certainly result in increased levels of THMs. The answer lies in devising a strategy that addresses all drinking water standards. (These strategies are addressed in detail in sections 3 and 5.)

General Guidance for Meeting the Contemplated Standards

Operating treatment plants in New Jersey could, with treatment and process changes, meet the suggested THM standards. As general guidance for achieving compliance, two treatment strategies are recommended:

1. Use of ozone as the principal disinfectant
2. Use of chloramines or, possibly, chlorine dioxide, as a postdisinfectant to provide a disinfectant residual in the distribution system

Because 10 percent free chlorine typically remains after onsite generation of chlorine dioxide, it would be necessary to insure that the low-level free chlorine would not result in generation of chloroform in excess of 5 mcg/l or total THMs in excess of 20 mcg/l.

7.4 HEALTH RISKS OF DISINFECTION BY-PRODUCTS

Of major concern are the health effects of by-products of all disinfectants. Is is apparent from review of the existing literature that no disinfectant can, at this time, be considered entirely free of health risk. To put the risk in perspective, however, it should be noted that disinfection of public supplies has successfully curbed many major diseases of mankind. (The current state of knowledge concerning these health effects is summarized in section 4.0.)

Nevertheless, it is necessary to ascertain and to minimize the risks of the various disinfectants. The risks from chlorination by-products have been identified and steps are now being taken to minimize those risks. Similar steps have been taken to minimize risks from the by-products of chlorine dioxide. But the by-products and health effects of ozone are still relatively unknown. While preliminary indications are that the health effects of ozone are minimal, further research is needed.

The next step is to identify, through epidemiological and chemical research, the full risks of disinfection by-products and to place appropriate controls on these risks.

7.5 RECOMMENDATIONS FOR FUTURE WORK

Based on the results of this study on the prevention and removal of chlorination byproducts from drinking water, as series of future investigatory areas emerged as potentially significant. Future work should be accomplished in three separate areas. Watershed analysis, distribution system effects and treatment alternatives. Specific topics are as follows:

- Evaluate specific seasonal effect on THM formation by correlating watershed runoff quality to formation potential. Some water purveyors maintain watershed records that provide water quality data at specific locations.
- Evaluate the concept of developing a mobile DEP pilot trailer that can be moved to various locations to conduct bench scale studies on ozonation and other alternative disinfectants.
- Evaluate and fractionate (laboratory) TOC into separate molecular weight groupings to better understand how THMFP may be related to TOC fraction.
- Evaluate the effect of polymer addition in a water plant and the subsequent effect on THM formation with chlorination.
- Determine the changes in THM formation that occur in distribution systems as related to pipe age, biological condition; material flow time, etc. If very low THM levels, distribution system condition may have a significant effect.
- The effect on THM formation of rechlorination and storage (in a distribution system) should be explored. Some water purveyors purchase chlorinated water which has one level of THM's and then rechlorinated. The effect of multiple chlorination steps should be studied.
- Bench, pilot and full scale studies should be conducted in the field to evaluate alternative disinfectants. Actual performance can than be determined.

(special_waterii/48)

Appendix A

APPENDIX A

GLOSSARY OF SIGNIFICANT TECHNICAL TERMS

A-280 - New Jersey Assembly Bill No. 280

A-280 compound - Chemical compound regulated under A-280 law

A.W.W.A. - American Water Works Association.

activated carbon - Powdered or granule particles made from hydrocarbon or carbohydrate sources. The carbon residue left after distillation which has a porous structure, further eroded and purged to produce a maximum surface area. Provides for physical absorption (not chemical) of gases, inorganic matter and organic molecules; therefore useful for removing organics already oxidized and odorous constituents rendered innocuous by oxidation. Powdered activated carbon is added to water to adsorb organics. Granular activated carbon can replace sand or coal in a filter bed and serves the dual purpose of filtration and adsorption.

acute - Occurring over a short period of time; used to describe brief exposures and effects which appear promptly after exposure.

acute toxicity - an adverse biological response characterized by a sudden (typically defined as less than 4 days) onset after the stimulus.

adsorption - The phenomenon whereby molecules adhere to a surface with which they come in contact.

aeration - The process of causing intimate contact between air and a liquid, resulting in reduction of: taste and odor-producing substances (such as hydrogen sulfide and some volatile organic compounds); substances increasing corrosive action or interfering with chemicals used in treatment; or removal of volatile compounds. Used as a pretreatment step to oxidize metallic contaminants (e.g., iron).

air-to-water ratio - The ratio of air loading to water loading on a volumetric basis.

alkalinity - Capacity of water to neutralize acids. Alkalinity results from the presence of carbonates, bicarbonates, hydroxides, borate, silicate and/or phosphates. Alkalinity is expressed in equivalent milligrams of calcium carbonate per liter of water (mg/l as $CaCO_3$).

alum - cf aluminate sulfate (syn).

aluminum sulfate - $Al(SO_4)_3 \cdot xH_2O$. Alum, filter alum, alumina sulfate. Common coagulant used in water treatment, applied in liquid form to alkaline water to produce aluminum hydroxide floc particles; formed by reaction of bauxite with sulfuric acid; available in lump, liquid, or ground form; handling hazards are those common to acidic materials; optimum pH range of 5.5 to 7.8.

animal studies - Investigations using animals as surrogates for humans, on the expectation that results in animals are pertinent to humans.

assay - A test for a particular chemical or effect.

bacteria - Rigid, essentially unicellular microscopic organisms lacking chlorophyll. Usually spheroid, rod-like, or curved, but sometimes found as sheets, chains, or branched filaments. As a group, bacteria are universally distributed.

basin - A concrete, steel, fiberglass, or earthen tank, as in a flocculation basin.

bioassay - Test which determines the effect of a chemical on a living organism.

biodegradation - Decomposition of a substance into more elementary compounds by the action of microorganisms such as bacteria.

biotransformation - Conversion of a substance into other compounds by organisms; includes biodegradation.

breakpoint chlorination - Point at which added chlorine begins to form a free available chlorine residual.

breakthrough - At the point at which an activated carbon bed becomes exhausted the mass transfer zone approaches the end of the bed. Increasingly higher concentrations of the adsorbate are observed until the effluent concentration equals the influent concentration.

cancer - A disease characterized by the rapid and uncontrolled growth of aberrant cells into malignant tumors.

carbon column - A column filled with granular activated carbon. The primary function is preferential adsorption of a particular type or types of molecules.

carcinogen - a chemical that has been found to cause cancer in humans or laboratory animals, usually mammals. The USEPA classifies substances into four groups, according to the experimental evidence of carcinogenicity:

Group A: Human carcinogen - Sufficient evidence from human epidemiological studies.

Group B: Probable human carcinogen -

Group B1: Limited evidence from human epidemiological studies.

Group B2: Sufficient evidence from animal studies and inadequate or no data from human epidemiological studies.

Group C: Possible human carcinogen - Limited evidence of carcinogenicity from animal studies in the absence of human data.

Group D: Not classifiable as to human carcinogenicity - Inadequate human and animal evidence for carcinogenicity or no data available.

Group E: Evidence of noncarcinogenicity for humans - No evidence for carcinogenicity in at least two adequate animal tests or in both adequate human epidemiological and animal studies.

cation - 1. Positively charged ion in an electrolyte solution, attracted to the cathode under the influence of electric potential. 2. Any of the class of atoms or molecules that are deficient in one or more electrons or electronic charges. The charge on such an ion is usually indicated as in the example for calcium: Ca^{+2}; for aluminum: Al^{+3}; and for cadmium: Cd^{+2}. Metal cations of a given specie may have several states of charge possible (e.g., Ferric ion is Fe^{+3} and Ferrous ion is Fe^{+2}).

cationic coagulant aid - cf anionic coagulant aid. Positively charged chemical (polymer) or particle used with a coagulant to enhance solid-liquid separation by altering suspended matter. Polymers can assist in particle destabilization (coagulation) or, in some cases can be used as a primary coagulant, in lieu of a metallic salt (e.g. aluminum sulfate). Ordinarily fed into rapid mixing tanks, cationic polymers form a long chain of high molecular weight macro-molecules having numerous positive ionized sizes. Although coagulant aids assist in the destabilization of suspended particles, they can also act as molecular bridges between colloids facilitating particle-to-particle attachment.

cationic flocculant aid - Positively charged polymers that enhance the flocculation process by providing an effective bridging mechanism between previously neutralized particles. Although the flocculant aid is cationic, this characteristic does not provide functional charge neutralization.

cationic polymer - Positively charged chemical compounds of high molecular weight, composed of a chain of small, simple sub-units (monomers). Generally organic compounds that ionize in water to form highly positive macromolecules. Often used as coagulant aids to assist particle destabilization; as flocculant aids to promote floc aggregation; or as filter aids to increase filter rate or performance. Cationic polymers act to destabilize suspended particles by electrostatic neutralization. Generally have a lower molecular weight than anionic polymers and are more widely used in water treatment.

Celsius - See, centigrade.

centigrade - A temperature scale. To calculate centigrade from Fahrenheit, subtract 32° from the degree Fahrenheit and multiply by 5/9.

central nervous system - Portion of the nervous system which consists of the brain and spinal cord; CNS.

chemical dose - (1) Specific quantity of chemical applied to a specific quantity of fluid. (2) Quantity of material applied for a specific effect.

chemical precipitation - Creation of insoluble, settleable compounds by the reaction of substances in solution with ions added to the solution. Used in water treatment for iron and manganese removal, and for water softening. Used in wastewater treatment for removal of phosphorous. Generally refers to any settling process facilitated by the addition of chemicals.

chloramines - see combined available residual chlorine.

chlorination - Chlorine is added to water and react with any reducing agents present. When this demand is met, additional chlorine forms chloramines showing a combined available chlorine residual. (Also effective as disinfectants). When all ammonia present has been reacted with, a free available chlorine residual develops, oxidizing previously produced chloramines and creating oxidized nitrogen compounds. When oxidized, all additional chlorine at this point, or breakpoint, becomes a residual of free available chlorine for disinfection. Rate of bactericidal action primarily depends upon the concentration of free residual.

chlorine - A chemical disinfectant with strong oxidizing power that destroys the enzymatic processes of bacterial cells needed for survival (see chlorination). An extremely hazardous gas. The most commonly used disinfectant in United States.

chlorine demand - Difference between the amount of chlorine added to water and the quantity of free and combined available chlorine that remains after a specific contact period.

chlorine dioxide - ClO_2 - Water soluble, highly volatile gas used in water treatment for disinfection. Chlorine dioxide is usually manufactured onsite and carried a disinfectant residual.

chlorine residual - See, free available chlorine residual, and combined available chlorine residual.

chronic - Occurring over a long period of time, either continuously or intermittently; used to describe ongoing exposures and effects that develop only after a long exposure.

chronic exposure - Long-term, low level exposure to a toxic chemical.

chronic toxicity - an adverse biological response involving a stimulus that is lingering or continues over a long time and of relatively slow progress and long continuance.

clearwell - Reservoir for the storage of filtered water, having volume sufficient to prevent the necessity for frequent variations in filtration rate with variations in demand.

clinical studies - Studies of humans suffering from symptoms induced by chemical exposure

coagulant - Chemical compound used to promote destabilization and subsequent flocculation of finely divided suspended particles. Examples are aluminum sulfate, ferric sulfate, and ferric chloride.

coagulation - Physical and chemical interaction between finely divided suspended particles (e.g. turbidity), water, and chemicals (coagulant), which result in destabilization and initial aggregation of the suspended particles. Destabilization involves neutralization of electrical charges and adsorption of bridge forming molecules onto particle surfaces.

COD - abbreviation for Chemical Oxygen Demand, a measure of the oxygen-consuming capacity of inorganic and organic matter present in water or wastewater. Does not necessarily correlate with BOD, because the test does not differentiate between stable and unstable organic matter.

coliform group bacteria - Bacterial group of organisms, usually fecal in origin, used as an indicator of water safety.

combined available residual chlorine - Chlorine in solution existing in chemical combination with ammonia (chloramines) or organic nitrogen compounds. Less effective disinfectant than free available residual chlorine.

concentration - (1) Quantitative measure of chemicals in a solution. Usually a percentage or ratio of chemical to solvent (e.g., mg/l, lb/gal, ppm, etc.). (2) Process of increasing dissolved solids per unit volume of solution, usually by evaporation of solution.

contaminant - Any physical, chemical, biological, or radiological substance or matter in water.

conventional filtration - Filtration of water through a sand filter 24 to 30 inches deep at 2 gpm/ft^2; the water generally having been coagulated, flocculated, and settled before conventional filtration.

conventional treatment - specifically refers to this series of unit processes: rapid mixing - coagulation - flocculation - sedimentation - filtration.

conventional treatment - The water treatment process that incorporates rapid mix, flocculation, sedimentation, and rapid sand filtration. Used to remove turbidity (i.e., suspended solids), color, bacteria, iron, etc.

cumulative exposure - The summation of exposures of an organism to a chemical over a period of time.

degradation - Chemical or biological breakdown of a complex compound into simpler compounds.

dermal - Of the skin; through or by the skin.

desorption - The opposite of adsorption. A phenomena whereby an adsorbed molecule leaves the surface of the adsorbent.

detention time - The volume of a container divided by a given rate of inflow or discharge from the container. The theoretical time required for a fluid particle to pass through a container under specified flow conditions. For example, a 1-million gallon sedimentation basin flowing at a rate of 4,200 gpm would have a four-hour detention time.

diffusion - The movement of suspended or dissolved particles from a more concentrated to a less concentrated region as a result of the random movement of individual particles; the process tends to distribute them uniformly throughout the available volume.

direct filtration - specifically refers to this series of unit processes: rapid mixing - coagulation - flocculation - filtration. Differs from conventional treatment in that the sedimentation process is not used.

direct toxicity - a toxic response induced in an organism by the contaminant of interest and not by a reaction byproduct of the presence of the contaminant.

disinfectant - a chemical agent used for disinfection. Most disinfectants are strong oxidizing chemicals.

disinfection - The process of destroying or deactivating, although not necessarily to the point of sterilization, pathogenic organisms in water to a potable level. The efficiency of the process depends upon the kind and concentration of organisms to be destroyed, the kind and concentration of the disinfectant, contact time, chemical character, and temperature of the water to be treated.

drinking water standards - Standards for the quality of drinking water from surface water, ground water, or bottled water sources, imposed by federal, state or local authorities.

DWQI - Drinking Water Quality Institute

efficiency - The ratio of total output to total input.

epidemiological studies - Investigation of elements contributing to disease or toxic effects in human populations.

exhaustion - The point at which an adsorption media is incapable of adsorbing any additional contaminant.

exposure - Contact with a chemical or physical agent.

filter - Device to remove solid or colloidal material from the liquid which passes through it. There are several types of filtering media, e.g., granular material, fine cloth, unglazed porcelain, or specially-prepared paper.

filtration - the process of passing water through a filtering media (usually a granular material) for the removal of suspended or colloidal matter.

finished water - Water that has completed the desired treatment processes, or that enters a distribution system.

flash mixing - Rapid mixing which provides nearly instantaneous uniform blending of chemicals (coagulants, coagulant aids, etc.) with raw water, usually accomplished mechanically.

floc - Small, gelatinous masses formed in a liquid by the addition of a coagulant which causes agglomeration of the finely-divided suspended matter into relatively large clusters.

floc tenacity - Shearing resistance between two floc particles. Resistance of floc to fragmentation from mechanical or hydraulic turbulence.

flocculant - Chemical used to promote the agglomeration of suspended particles into gelatinous flocs dispersed in a fluid. Provides bridging material between suspended particles to form neutrally charged precipitates. Many coagulants also function as flocculants.

flocculation - Agglomeration of finely divided, destabilized (coagulated), suspended matter by gentle mechanical or hydraulic stirring. The result is relatively large particles (floc) subsequently separated from the liquid by settling, flotation, or filtration. Although coagulation and flocculation are considered sequential processes, there is no clear demarcation between the two, and some overlap always exists.

free available residual chlorine - Excess chlorine existing as hypochlorous acid or hypochlorite ion.

free chlorine residual - the amount of chlorine available as dissolved gas, hypochlorous acid, or hypochlorite ion in water that is not combined with an amine or other compound.

ft - Foot

fulvic acid - the low molecular weight portion of the naturally occurring organic material in water . Usual usage of this word considers fulvic acids to be a subset of humic acids.

g - gram

GAC - granular activated carbon (see activated carbon).

gal - Gallon

gas chromatograph - Analytical device used to identify and separate organic compounds in water by preferential adsorption of chemical compounds in an ascending molecular-weight sequence onto a solid adsorbent material. Used to measure trihalomethanes in water.

gpd - Gallons per day

gpm - Gallons per minute

granular activated carbon - See activated carbon

greensand - Sand entirely or mostly of particles of glauconite (mineral), a hydrous potassium iron silicate.

hepatoma - A malignant tumor occurring in the liver.

humic acid - the higher molecular weight portion of the naturally occurring organic material occurring in water.

hydrology - The study of the properties, distribution, behavior and effects of water on the earth's surface, in the soil and underlying rocks and in the atmosphere.

hydrolysis - The breakdown of a chemical into two parts concomitant with addition of the elements of water (H- and OH-) to the products.

in vitro studies - Studies of chemical effects conducted in tissues, cells or subcellular extracts from an organism (i.e., not in the living organism).

in vivo studies - Studies of chemical effects conducted in intact living organisms.

influent - Liquid flowing into a system, tank, or plant.

in-line filtration - specifically refers to this series of unit processes: rapid mixing - coagulation - filtration.

inorganic salt - Chemical compound with a non-carbon structure, composed of positive and negative ions. A product of the neutralization of an acid and a base.

intake - Works or structures at the head of a conduit into which water is drawn.

intake screen - Screen placed at the head of, or in an intake to prevent fish and other matter from entering the system.

ion - 1. Positively or negatively charged atom or molecule in solution, formed by the dissociation of an electrolyte, e.g., when neutral sodium chloride (NaCl) is dissolved in water, the molecule dissociates into positively charged sodium (Na^+) atoms and negatively charged chlo ide (Cl^-) atoms. Most substances hen dissolved in water from positively and negatively charged atoms or groups of atoms. 2. Any charged atom or molecule existing in an aqueous solution. Ions also exist in air, space, solids, and in nonaqueous liquids.

ion exchange - Chemical process in which ions are exchanged from two different molecules.

l - Liter

lb - Pound

loading - Rate of flow into a treatment plant or a particular unit, usually expressed in mgd or gpm.

materials balance - An accounting of the mass flow of a substance from sources of production, through distribution and use, to disposal or distribution, and including any releases to the environment.

maximum contaminant level (MCL) - The limit, established by a governing body, of the maximum permissible level of a contaminant in water delivered to the free flowing outlet of the ultimate user of a public water system. Except in the case of turbidity where the maximum permissible level is measured at the point of entry to the distribution system. Contaminants added to the water under circumstances controlled by the user, except those resulting from corrosion of piping and plumbing caused by water quality, are excluded from this definition.

mcg - Microgram (1,000 mcg = 1 mg)

mcg/l - Micrograms per liter

MCL - See maximum contaminant level

metabolism - The sum of the chemical reactions occurring within a cell or a whole organism; includes the energy-releasing breakdown of molecules (catabolism) and the synthesis of new molecules (anabolism).

metabolite - Any product of metabolism, especially a transformed chemical.

mg/l - Milligrams per liter

mgd - Million gallons per day

microorganism - Minute organism, either plant or animal, invisible or barely visible to the naked eye (e.g. bacteria).

min - Minutes

minimum detention limit (MDL) - The minimum concentration of a contaminant that can be analytically detected using presently available methods.

molecular weight - Sum of the atomic weights (relative scale, one unit being 1/12 the mass of the C^{12} atom) of all atoms of a molecule.

mutagen - An agent that causes a permanent genetic change in a cell other than that which occurs during normal genetic recombination

mutagenicity - The capacity of a chemical or physical agent to cause permanent alternation of the genetic materials within living cells.

NJAC - New Jersey Administrative Code

NJDEP - New Jersey Department of Environmental Protection

NJSDWA - New Jersey Safe Drinking Water Act

NPDWR - National Primary Drinking Water Regulation

organic chemicals - Compounds that include and are built upon the carbon molecule.

organohalide - Chemicals formed from the reaction of organic compounds and halogens.

oxidant - Oxidizing agent, in reactions involving electron transfer. Atoms which gain electrons during the reaction; the atoms which undergo a decrease in oxidation number during chemical reactions.

oxidize - To combine with oxygen; make into an oxide, removing electrons.

ozone - (O_3) Oxygen in molecular form with three atoms of oxygen forming each molecule.

PAC - Powdered activated carbon; see activated carbon.

parts per billion (ppb) - Dimensionless unit used to express concentration. It is the ratio of grams of a chemical solute per one billion grams of water (same as micrograms per liter or mcg/l).

parts per million (ppm) - Dimensionless unit used to express concentration. It is the ratio of grams of a chemical solute per one million grams of water (same as milligrams per liter or mg/l)

pathogenic - Causing or capable of causing disease.

pathogens - disease producing microorganisms.

pH - Negative logarithm of the hydrogen-ion concentration. Higher concentration means lower pH value representing higher acidity.

pilot tests - Reproduction of the processes occurring in a treatment plant, by means of a scaled-down practical version for a laboratory. Various tests are run to determine optimum chemical dosage, detention times, and to determine which processes are most effective for a particular goal.

piloting - The method by which a small-scale experiment of a full-scale installation is performed; as in "pilot plant."

post chlorination - Application of chlorine after any other treatment process to ensure an adequate disinfecting residual in a distribution system.

potable - Can be consumed without concern for adverse effects upon health.

potassium permanganate - $KMnO_4$ - Strong oxidizing chemical primarily used in water treatment plants to remove objectionable taste, and odor-producing compounds, and to oxidize iron and manganese prior to coagulation, sedimentation, or filtration.

ppb - Parts per billion

ppm - Parts per million

PQL - Practical Quantitation Level

prechlorination - The application of chlorine to water prior to treatment.

precipitate - (1) To chemically alter a solution in order to render one of its components insoluble, thereby making possible its removal from the solution. (2) Solids which settle from a settling process (e.g., sedimentation basin sludge).

precipitation - (1) Sedimentation of suspended particles from a fluid. (2) Passing of a liquid substance in solution out of solution by changing into a solid form.

predisinfection - the application of a disinfectant at the intake to a water treatment plant. Sometimes referred to as preoxidation if the main purpose is for taste and odor control.

pretreatment - (1) Any sequence of unit processes designed to facilitate or assist subsequent treatment processes (see, prechlorination). (2) Flash mixing, flocculation, and sedimentation in a conventional treatment plant.

primary disinfection - The major disinfection step normally practiced after filtration in a surface water treatment plant employing conventional or direct filtration. In ground water treatment plants, primary disinfection also can be applied post-filtration (if filtration is used). If filtration is not incorporated in ground water treatment, primary disinfection is practiced in the treatment plant, prior to the water entering the distribution system.

PTA - Packed Tower Aeration

rapid mixing - General process description wherein chemicals (coagulants, coagulant aids, etc.) are added to raw water and blended by mechanical or hydraulic agitation. Often more than one chemical injection point is used. Detention times are usually 30 seconds or less, but may range up to 3 minutes or more. Injection of chemicals from one point with nearly instantaneous blending is specifically called flash mixing. Methods of mixing include baffles, inline blenders, and other mechanical devices which yield velocity gradients of 300 ft/s/ft or more. Rapid mixing is the first unit process in conventional treatment plants.

rapid sand filter - Filter for water purification which takes pretreated water (cf coagulation and sedimentation) and passes it through a

filtering medium, composed of layers of sand, anthracite coal, or some other material, and is usually 24 to 30 in. thick. It rests on a bed of gravel or a porous medium (e.g., carborundum). An underdrainage system removes filtrate and also distributes washwater. The filter itself is cleaned by a flow reversal which forces water upward through the filtering medium.

raw water - Untreated water.

reaction time - Length of time required for two or more substances to interact forming other substances, in a chemical reaction, or in simple mixing.

reactivation - The removal of adsorbates from spent granular activated carbon which will allow the carbon to be reused. This is also called regeneration.

rechlorination - Application of additional chlorine at some point in the distribution system where plant effluent residual is insufficient to control bacterial and algal regrowth.

renal - Pertaining to the kidney.

risk assessment - A qualitative or quantitative evaluation of the environmental and/or health risk resulting from exposure to a chemical or physical agent (pollutant); combines exposure assessment results with toxicity assessment results to estimate risk.

SDWA - Safe Drinking Water Act, or the "ACT," as amended in 1986

sedimentation - Settling chemical precipitation; the process of gravitational subsidence and deposition of suspended matter carried by water, wastewater, or other liquids. Usually accomplished by reducing the velocity of the liquid below the point at which it can transport suspended material. Sedimentation does not depend upon coagulation and flocculation but is made more effective by those processes.

solubility - Ability of a solid substance to dissolve in a solvent such as water or alcohol.

solute - The substance dissolved in a solution.

solution - Liquid resulting from the addition of a substance (solute) to a liquid (solvent).

solvent - Liquid used to dissolved a substance.

teratogenicity - The capacity of a physical or chemical agent to cause nonhereditary congenital malformations (birth defects) in offspring.

THM - see trihalomethane

THMFP - See trihalomethane formation potential

total trihalomethanes (TTHM) - The sum of the concentration in mg/l of the trihalomethane compounds [trichloromethane (chloroform), dibrimochloromethane, bromodichloromethane, and tribromomethane (bromoform)], rounded to two significant figures. Regulated by the EPA as a primary standard in drinking water (MCL 0.10mg/l).

toxicity - The quality or degree of being poisonous or harmful to plant, animal or human life.

toxicology - Study of poisons, including their nature, effects, detection, and treatment.

trihalomethane - An organic compound, derivative of methane, wherein three of the four hydrogen atoms in methane are each substituted by a halogen atom in the molecular structure (MCL 0.10 mg/l).

trihalomethane formation potential (THMFP) - Maximum concentration of total trihalomethanes produced in a given water containing a disinfectant residual after 7 days at a temperature of 25°C or above.

TTHM - see total trihalomethane

turbidity - Measure of clarity of a liquid clouded by suspension of colloidal liquid droplets or fine solids.

TVOS - Toxic volatile organic substance

unit process - A particular complete step in the treatment of water (e.g., coagulation, flocculation, sedimentation, or filtration).

valence - 1. Integer representing the number of hydrogen atoms with which one atom of an element (or one radical) can combine (negative valence), or the number of hydrogen atoms the atom (or radical) can displace (positive valence). 2. The combining capacity of atoms. Atoms consists of neutrons, protons (+) and electrons (-). The neutrons and protons are contained in the nucleus while electrons (equal in number to the protons) are arranged in orderly rings outside. In the outer ring if electrons are lost the atom becomes a positively charged ion and if electrons are gained the atom becomes a negatively charged ion. Atoms tend to gain or lose electrons so as to assume or approach complete rings. Thus the chemical sodium chloride NaCl is chemically inert since the positive sodium (NA^{+}), valence +1) combines with the negative chloride (Cl, valence -1). 3. The number of electron charges in excess or defect from neutrality that may be experienced by an atom or molecule. This is also used to describe the number of electrons in the outer ring of atoms called valence electrons. These are the electrons that are lost in oxidation rea- ons or gained in reduction reactions.

virus - Smallest being capable of producing disease and infection in human or other large species (10 to 300 millimicrons). Consist of a nucleii acid core and an outer shell, or capsid, consisting of smaller protein capsomeres. True viruses are resistant to antibiotics. Viruses do not multiply by division as do bacteria, and multiply only in living

cells where they are assembled as complex macromolecules using the cells' biochemical systems.

VOC - Volatile organic chemical

volatile - Capable of being evaporated at relatively low temperatures.

water - H_2O. Clear, tasteless, and odorless liquid essential to most plant and animal life. Compound of hydrogen and oxygen. Freezes at 32°F (0°C), boils at 212°F (100°C). Chemical compound may be termed hydrogen oxide. Can exist as a solid, liquid, or a gas, in solution or in suspension.

water treatment plants - Water treatment works intended specifically for water treatment; includes sedimentation, chemical coagulation, filtration, and chlorination.

yr - Year

(special_waterii/41)

Appendix B

APPENDIX B

BIBLIOGRAPHY

Aieta, E. Marco and James D. Berg. 1986. A Review of Chlorine Dioxide in Drinking Water Treatment. Journal of American Water Works Association. 78.

Alavanja, M., I. Goldstein, and M. Sasser. 1980. A Case Control Study of Gastrointestinal and Urinary Tract Cancer Mortality and Drinking Water Chlorination. In: Water Chlorination: Environmental Impact and Health Effects, edited by R. L. Jolley, volume 2, 395-411. Ann Arbor: Ann Arbor Science Publishers, Inc.

Ames, B.N., F.D. Leed, and W.E. Durston. 1973. An Improved Bacterial Test System for the Detection and Classification of Carcinogens. Proceedings of the National Academy of Science. 70:782-786.

Argo, David G. 1983. The Lime/RO Process and its Role in Water Reclamation for Southern California. Paper presented at the Water Pollution Control Federation 56th Annual Conference, Atlanta, Georgia, 6 October.

Bailey, Philip S. 1972. Organic Groupings Reactive Toward Ozone Mechanisms In Aqueous Media. In: Ozone in Water and Wastewater Treatment, edited by Francis L. Evans III. Ann Arbor: Ann Arbor Science Publishers, Inc.

Barrett, Sylvia E., Marshall K. Daves, and Michael J. McGuire. 1985. Blending Chloraminated and Chlorinated Waters. Journal of American Water Works Association. 77(1).

Blanck, Clarence A. 1979. Trihalomethane Reduction in Operating Water Treatment Plants. Journal of the American Water Works Association. September 1978.

Broude, N. E., and E. I. Budowsky. 1974. The Reaction of Glyoxal With Nucleic Acid Compounds. Biochem. Biophys. Acta. 294: 378-384.

Bull, Richard J. 1980. Health Effects of Alternate Disinfectants and Their Reaction Products. Journal of American Water Works Association. 72(5): 299.

_____. 1982. Toxicological Problems Associated With Alternative Methods of Disinfection. Journal of American Water Works Association. 74(12): 642-648.

_____. 1984. Health Effects of Chloramines. In: Proceedings AWWA Seminar on Chloramination for THM Control: Principles and Practices, pp. 17-26. Dallas, Texas: The Water Quality Division, American Water Works Association.

Bull, Richard J., and L. J. McCabe. 1985. Risk Assessment Issues in Evaluating the Health Effects of Alternate Means of Drinking Water Disinfection. In: Water Chlorination: Environmental Impact and Health Effects, edited by R.L. Jolley, vol. 5. Chelsea, Michigan: Lewis Publishers, Inc.

Camp Dresser & McKee Inc. 1982. Los Angeles Aqueduct Water Filtration Plant Final Design Report. Camp Dresser & McKee Inc., Boston, Massachusetts. Report prepared for Los Angeles, California Department of Water and Power. January 1982.

Camp Dresser & McKee Inc. 1986. Water Treatment Plant Final Report. Camp Dresser & McKee Inc., Boston, Massachusetts. Report prepared for City of Worcester, Massachusetts. April 1986.

Camp Dresser & McKee Inc. 1987. Design Criteria Report-Modifications to the Old Oaken Bucket Pond Water Treatment Plant. Camp Dresser & McKee Inc., Boston, Massachusetts. Report prepared for Town of Scituate, Massachusetts. June 1987.

Camp Dresser & McKee Inc., 1988. New Jersey Special Water Treatment Study-Phase II-Final Report. Camp Dresser & McKee Inc., Edison, New Jersey. Prepared for State of New Jersey, Department of Environmental Protection, Division of Water Resources. April 1988.

Carus Chemical Co. 1987. Cairox Potassium Permanganate product literature. Forms #300, #170 and #205.

Christman, R. F. 1980. Chemical Identification of Aquatic Humic Chlorination Products. In: Water Chlorination: Environmental Impact and Health Effects, edited by R. L. Jolley, vol. 3, 75-85. Ann Arbor: Ann Arbor Science Publishers, Inc.

Christman, R. F., J. D. Johnson, F. K. Pfaender, D. L., Norwood, W. Liao, M. R. Webb, and M.J. Bobenrieth. 1981. Chlorination of Aquatic Humic Substances. EPA Report no. R804430. Cincinnati: U.S. Environmental Protection Agency.

Cleasby, J. L., E. R. Baumann, and C. D. Black. 1964. Effectiveness of Potassium Permanganate for Disinfection. Journal of American Water Works Association. April, 1964.

Colchough, C. A., J. D. Johnson, R. F. Christman, and D.S. Millington. 1983. Organic Reaction Products of CLO_2 and Natural Aquatic Fulvic Acid. In: Water Chlorination: Environmental Impact and Health Effects. edited by R. L. Jolley, vol. 4, 219-299. Ann Arbor: Ann Arbor Science Publishers, Inc.

Condie, Lyman W. 1986. Toxicological Problems Associated With Chlorine Dioxide. Journal of American Water Works Association. 78(b).

Cooper, William J., Rod J. Zika, and Margarete S. Steinhauer. 1985. Bromide-Oxidant Interactions and THM Formation: A Literature Review. Journal of American Water Works Association. 77(4).

Culp, Gordon. 1984. Trihalomethane Reduction in Drinking Water: Technologies, Costs, Effectiveness, Monitoring, Compliance. Park Ridge, New Jersey: Noyes Publications.

Dempsey, Brian A., Rui M. Ganho, and Charles R. O'Melia. 1984. The Coagulation of Humic Substances by Means of Aluminum Salts. Journal of American Water Works Association. 76(4).

Dice, Jack C. 1985. Denver's Seven Decades of Experience With Chloramination. Journal of American Water Works Association. 77(1).

Druckrery, H. 1968. Chlorinated Drinking Water, Toxicity Tests, Involving Seven Generations of Rats. Food and Cosmetics Toxicology. 6:147.

Edzwald, James K., William C. Becker, and Kevin L. Wattier. 1985. Surrogate Parameters for Monitoring Organic Matter and THM Precursors. Journal of American Water Works Association. 77(4).

Egyud, L. G. and A. Szent-Gyorgyi. 1966. Cell Division, Ketoaldehydes, and Cancer. Proceedings of the National Academy of Science.

EPA. 1976. Quality Criteria For Water. U.S. Environmental Protection Agency, Washington, D.C.

Faust, Samuel D. (Professor of Environmental Science at Rutgers University, New Jersey), 1987. Letter to Paul Schoor of New Jersey Department of Environmental Protection, Trenton, New Jersey. 28 December 1987.

Faust, Samuel D., and Aly M. Osman. 1986. Adsorption Processes for Water Treatment. Boston: Butterworth Publishers.

Glaze, William H. et al. 1982. Pilot Scale Evaluation of Biological Activated Carbon for the Removal of THM Precursors. Report Prepared for Water Supply Research: Office of Research and Development, Environmental Protection Agency. EPA 600/2-82-046. Cincinnati, Ohio.

Greenberg, Arnold E. 1980. Public Health Aspects of Alternative Water Disinfectants. In: Proceedings of the AWWA Seminar on Water Disinfection With Ozone, Chloramines, or Chlorine Dioxide, pp. 1-6. Atlanta, Georgia: The Water Quality Division, American Water Works Association.

Gummerman, Robert C., Russell L. Culp and Sigurd P. Hansen. 1979. Estimating Water Treatment Costs Volume 2, Cost Curves Applicable to 1 to 200 mgd Treatment Plants. Prepared for Environmental Protection Agency. EPA-600/2-79-1626.

Gumerman, Robert C., and Nancy Heim. 1983. Evaluation of Treatment Effectiveness for Reducing Trihalomethanes in Drinking Water. Culp/Wesner/Culp, Santa Ana, California. Report prepared for The U.S. Environmental Protection Agency.

Gurol, Mirat D. 1985. Factors Controlling the Removal of Organic Pollutants in Ozone Reactors. Journal of American Water Works Association, 77(8).

Haag, Werner R., and Jurg Hoigne. 1983. Ozonation of Bromide-Containing Waters: Kinetics of Formation of Hypobromous Acid and Bromate. EST, 17(5): 261.

Hack, David J. 1985. State Regulation of Chloramination. Journal of American Water Works Association. 77(1).

Haller, J. F., and W. W. Northgraves. 1955. Chlorine Dioxide and Safety. TAPPI. 38: 199.

Hoehn, Robert C., Kevin L. Dixon, Jill K. Malone, John T. Novak, and Clifford W. Randall. 1984. Biologically Induced Variations in the Nature and Removability of THM Precursors by Alum Treatment. Journal of American Water Works Association. 76(4).

Hoff, J.C. and E.E. Geldreich. 1980. Comparison of the Biocidal Efficiency of Alternative Disinfectants. In: Proceedings of the AWWA Seminar on

Water Disinfection with Ozone, Chloramines, or Chlorine Dioxide. American Water Works Association no. 20152.

Huang, Jerry Y. C., and Gary C. Smith. 1984. Spectrophotometric Determination of Total Trihalomethanes in Finished Waters. Journal of American Water Works Association. 76(4).

James M. Montgomery, Consulting Engineers, Inc. 1983. Special Water Treatment Study, Phase I, Final Report. Prepared by James M. Montgomery, Inc., Reston, Virginia for State of New Jersey, Department of Environmental Protection, Division of Water Resources.

James M. Montgomery, Consulting Engineers, Inc. 1985. Water Treatment Principles and Design. New York: John Wiley & Sons, Inc.

Johnson, J. D., R. F. Christman, D. L. Norwood and D. S. Millington. 1981. Reaction Products of Aquatic Humic Substances With Chlorine. Environmental Health Perspectives. 46: 63-73.

Johnson, J. Donald and James Jensen. 1983. THM and TOX Formation - Routes, Rates and Precursors. In: Proceedings of the AWWA Seminar on Strategies for the Control of Trihalomethanes. American Water Works Association no. 20174.

Jolley, Robert L. 1986 Basic Issues in Water Chlorination: A Chemical Perspective, edited by Robert L. Jolley et al., In: Water Chlorination Chemistry, Environmental Impact and Health Effects, Volume 5. Chelsea, Michigan: Lewis Publishers, Inc.

Komorita, John D., and Vernon L. Snoeyink. 1985. Technical Note: Monochloramine Removal From Water with Activated Carbon. Journal of American Water Works Association. 77(1).

Kreft, Peter, Mark Umphres, Jeanne-Marie Hand, Carol Tate, Michael J. McGuire, and R. Rhodes Trussell. 1985. Converting from Chlorine to Chloramines: A Case Study. Journal of American Water Works Association.

77(1).

Kruithof, J. C., ed. 1986. Chlorination By Products: Production and Control, Report from the Committee on Side Effects of Chlorination. American Water Works Association Research Foundation. KIWA Communication no. 74.

Kuhn, W., H. Sontheimer et al. 1978. Use of Ozone and Chlorine in Water Utilities in the Federal Republic of Germany. Journal of American Water Works Association. 70:6:326.

Lauer, William C., Stephen R. Lohman and Stephen E. Rogers. 1986. Experience With Chlorine Dioxide at Denver's Reuse Plant. Journal of American Water Works Association. 78(b).

LePage, Wilfred. L. 1981. The Anatomy of an Ozone Plant. Journal of American Water Works Association, 73(2): 105.

_____. 1985. A Treatment Plant Operator Assesses Ozonation. Journal of American Water Works Association, Volume 77(8).

Lee, Ramon G. and Richard H. Moser. 1983. Field Experiences With Controlling TTHMs. In: Proceedings of the AWWA Seminar on Strategies for the Control of Trihalomethanes. American Water Works Association, no. 20174.

Levy, James A., and Paul V. Roberts. 1983. Air Stripping of Trihalomethanes. In: Proceedings of the AWWA Seminar on Strategies for the Control of Trihalomethanes. American Water Works Association, no. 20174.

Liao, Marcia Yunmen, and Stephen J. Randike. 1985. Removing Fulvic Acid by Lime Softening. Journal of American Water Works Association, 77(8).

Lozier, James C., and Raymond A. Sierka. 1985. Using Ozone and Ultrasound to Reduce RO Membrane Fouling. Journal of American Water Works

Association, 77(8).

Luss, Gerald. 1986. Cleaning RO Units Used for Potable Water Production. Water World News, 2(2).

Lykins, Benjamin W., Jr., and Mark H. Griese. 1986. Using Chlorine Dioxide for Trihalomethane Control. Journal of American Water Works Association. 78(6).

Maloney, Stephen W., I. H. Suffet, Keith Bancroft, and Howard M. Neukrug. 1985. Ozone-GAC Following Conventional U.S. Drinking Water Treatment. Journal of American Water Works Association. 77(8).

Masschelein, W. J. 1985. Experience With Chlorine Dioxide in Brussels, Part 3: Operational Case Studies. Journal of American Water Works Association. Volume 77(1).

Miller, G. Wade, et al. 1978. An Assessment of Ozone and Chlorine Dioxide Technologies for Treatment of Municipal Water Supplies. Prepared for the Municipal Environmental Research Laboratory, U.S. Environmental Protection Agency, Cincinnati, Ohio. EPA-600/2-78-147.

National Cancer Institute. 1976. Report on the Carcinogenesis Bioassay of Chloroform. National Cancer Institute, Bethesda, MD. (NTIS No. PB-264-018/AS).

National Research Council. 1980. Drinking Water and Health, volume 2. Washington D.C. National Academy Press.

_____. 1987. Drinking Water and Health, Disinfectants and Disinfectant By-Products, volume 7. Washington, D.C. National Academy Press.

Neukrug, Howard M. et al. Removing Organics from Philadelphia Drinking Water By Combined Ozonation And Adsorption. Prepared for the Municipal Environmental Research Laboratory, U.S. Environmental Protection Agency.

Washington, D.C. Cooperative Agreement No. CR06256.

Nuekrug, Howard M., Matthew G. Smith, Stephen W. Maloney and Irwin H. Suffet. 1984. Biological Activated Carbon - At What Cost? Journal of American Water Works Association, 76:4:158.

Rav-Acha, Ch. 1983. The Reactions of Chlorine Dioxide With Aquatic Organic Materials and Their Health Effects. Water Resource 18(11): 1329-1341.

Reckhow, David A. and Philip C. Singer. 1984. The Removal of Organic Halide Precursors by Preozonation and Alum Coagulation. Journal of American Water Works Association. 76(4).

Reinhard, Martin, Naomi L. Goodman, Perry L. McCarty, and David G. Argo. 1986. Removing Trace Organics by Reverse Osmosis Using Cellulose Acetate and Polyamide Membranes. Journal of American Water Works Association. 78(4).

Renner, Robert C. and Kerwin L. Rakness. 1984. Ozone Design Considerations for Water Treatment. Presented at AWWA Rocky Mountain Section Meeting. Keystone, Colorado. September 16-19.

Rice, Rip G., C. Michael Robson, G. Wade Miller, and Archibald G. Hill. 1981. Uses of Ozone in Drinking Water Treatment. Journal of American Water Works Association. 73:1:44.

Roberts, Paul V., and James A. Levy. 1985. Energy Requirements for Air Stripping Trihalomethanes. Journal of American Water Works Association. 77(4).

Roy, D., R.S. Englebrecht, and E.S.K. Chian. 1982. Comparative Inactivation of Six Enteroviruses by Ozone. Journal of American Water Works Association. 74:12:660.

Saunier, Bernard M., Robert E. Selleck, and R. Rhodes Trussell. 1985.

Preozonation as a Coagulant Aid in Drinking Water Treatment. In: Ozone in Water Treatment - Applications, Operations, and Technology, American Water Works Association.

Schalekamp, Maarten. 1978. Experiments in Switzerland With Ozone, Particularly in Connection With the Charge of Undesirable Elements Present in Water. Paper presented at the Ozone Technology Symposium and Exposition, National Ozone Institute, Los Angeles.

_____. 1980. Comparisons Between Two Ozone Plants with Normal and Increased Frequency As Well As of the Effect Between a Dosage of 1 Milligramme Resp. 5 Milligrammes of O_3 per Litre. In: Ozone in Water Treatment-Applications, Operations and Technology, American Water Works Association, 1985.

Shih, K. L. and J. Lederberg. 1976. Chlorine Mutagenesis in Bacillus Subtilis. Science, 192:1141.

Singer, Philip C. 1983. Applicability of Coagulants and Alternative Oxidants for Controlling THM Formation. In: Proceedings of the AWWA Seminar on Strategies for the Control of Trihalomethanes. American Water Works Association no. 20174.

Sorg, Thomas J., and Thomas Love, Jr. 1984. Reverse Osmosis Treatment to Control Inorganic and Volatile Organic Contamination. Report prepared for the Drinking Water Research Division, Municipal Environmental Research Laboratory, U.S. Environmental Protection Agency.

Sproul, O.J., C.E. Buck, M.A. Emmerson, D. Boyce, D. Walsh, D. Houser. 1979. Effect of Particulates on Ozone Disinfection of Bacteria and Viruses in Water. EPA-600/2-79-089.

Steinbergs, Charles Z. 1986. Removal of By-Products of Chlorine and Chlorine Dioxide at a Hemodialysis Center. Journal of American Water Works Association. 78(6).

Stevens, Alan. A. 1982 Reaction Products of Chlorine Dioxide. Environmental Health Perspectives. 46: 101-110.

Stevens, Alan A., Ronald C. Dressman, R. Kent Sorrell and Herbert J. Brass. 1985. Organic Halogen Measurements: Current Uses and Future Prospects. Journal of American Water Works Association. 77(4).

Symons, J. M. et al. 1977. Ozone, Chlorine Dioxide and Chloramines as Alternatives to Chlorine for Disinfection of Drinking Water: State-of-the-Art. Report prepared for Water Supply Research, Office of Research and Development, Environmental Protection Agency, Cincinnati, Ohio.

Symons, J. M. et al. 1979. Ozone, Chlorine Dioxide and Chloramines as Alternatives to Chlorine for Disinfection of Drinking Water. Water Chlorination: Environmental Impact and Health Effects, Vol. 2 edited by R.L. Jolley et al. Ann Arbor: Ann Arbor Science Publishers.

Symons, James M., Alan A. Stevens, Robert M. Clark, Eswin E. Geldreich, Thomas Love, J. and Jack DeMarco. 1981. Treatment Techniques for Controlling Trihalomethanes in Drinking Water. Drinking Water Research Division, Municipal Environmental Research Laboratory, U.S. Environmental Protection Agency. EPA-600/2-81-156. Washington, D.C.: Government Printing Office.

Trevors, J. T. and J. Bursuraba. 1980. Toxicity of Benzoquinone and Hydroquinone in Short-Term Bacterial Bioassays. Bulletin of Environmental Contamination and Toxicology. 25: 672-675.

U.S. Environmental Protection Agency. Municipal Environmental Research Laboratory. 1981. Treatment Techniques for Controlling Trihalomethanes in Drinking Water. Washington, D.C.: Government Printing Office, February.

U.S. Environmental Protection Agency. Criteria and Standards Division Science and Technology Branch. 1983. Trihalomethanes in Drinking Water: Sampling, Analysis, Monitoring, and Compliance. Washington, D.C.:

Government Printing Officer, August.

Weber, Walter J. Jr., and Abdullah M. Jodellah. 1985. Removing Humic Substances by Chemical Treatment and Adsorption. Journal of American Water Works Association. 77(4).

Westerhoff, Garret P. and Richard Miller. 1986 Design of the GAC Treatment Facility at Cincinnati. Journal of American Water Works Association. 78(4).

Wickramanayake, G. B., Alan J. Rubin and Otis J. Sproul. 1984. Inactivation of Naegleria and Giardia Cysts in Water by Ozonation. Journal of the Water Pollution Control Federation, 56(8):983-988.

_____. 1985. Effects of Ozone and Storage Temperature on Giardia Cysts. Journal of American Water Works Association, 77(4).

(22)

Appendix C

Government Printing Officer, August.

Weber, Walter J. Jr., and Abdullah M. Jodellah. 1985. Removing Humic Substances by Chemical Treatment and Adsorption. Journal of American Water Works Association. 77(4).

Westerhoff, Garret P. and Richard Miller. 1986 Design of the GAC Treatment Facility at Cincinnati. Journal of American Water Works Association. 78(4).

Wickramanayake, G. B., Alan J. Rubin and Otis J. Sproul. 1984. Inactivation of Naegleria and Giardia Cysts in Water by Ozonation. Journal of the Water Pollution Control Federation, 56(8):983-988.

_____. 1985. Effects of Ozone and Storage Temperature on Giardia Cysts. Journal of American Water Works Association, 77(4).

APPENDIX C

NJDEP THM COMPLIANCE DATABASE
RAW DATA
MOST RECENT FOUR QUARTER TTHM AVERAGE

Form DWR-042 (9/87)
DWR - BSDW - 01

New Jersey Department of Environmental Protection
Division of Water Resources - Bureau of Safe Drinking Water
CN 029, Trenton, N.J. 08625

QUARTERLY TRIHALOMETHANE (THM) INPUT FORM

Name _____ PWS ID# ___ ___ ___ ___ ___ ___ ___ TH

Address _____ Plant Name _____ #___ ___

City _____ Laboratory ID# ___ ___ ___ ___ ___

State _____ Zip _____ Laboratory Name _____

SAMPLE LOCATION	ANALYSIS RESULTS		OTHER INFORMATION
1. Address:_____	Sign: (<)	ug/l (PPB)	Collection Date ..... ____/____/____
City:_____ County_____			Analysis Date..... ____/____/____
2941 - Chloroform.....	____	_____	Analysis Method # _____
2942 - Bromoform.....	____	_____	Sample Type: M
2943 - Bromodichloromethane.....	____	_____	(Max. Res. Time)
2944 - Dibromochloromethane.....	____	_____	
2. Address:_____	Sign: (<)	ug/l (PPB)	Collection Date ..... ____/____/____
City:_____ County_____			Analysis Date..... ____/____/____
2941 - Chloroform.....	____	_____	Analysis Method # _____
2942 - Bromoform.....	____	_____	Sample Type: D
2943 - Bromodichloromethane.....	____	_____	(Reg. Distribution)
2944 - Dibromochloromethane.....	____	_____	
3. Address:_____	Sign: (<)	ug/l (PPB)	Collection Date ..... ____/____/____
City:_____ County_____			Analysis Date..... ____/____/____
2941 - Chloroform.....	____	_____	Analysis Method # _____
2942 - Bromoform.....	____	_____	Sample Type: D
2943 - Bromodichloromethane.....	____	_____	(Reg. Distribution)
2944 - Dibromochloromethane.....	____	_____	
4. Address:_____	Sign: (<)	ug/l (PPB)	Collection Date ..... ____/____/____
City:_____ County_____			Analysis Date..... ____/____/____
2941 - Chloroform.....	____	_____	Analysis Method # _____
2942 - Bromoform.....	____	_____	Sample Type: D
2943 - Bromodichloromethane.....	____	_____	(Reg. Distribution)
2944 - Dibromochloromethane.....	____	_____	

Samples were Collected by _____ ___/___/___ *Date*

Samples were Analyzed by _____ ___/___/___ *Date*

Form prepared by: ___Purveyor ___Laboratory

_____ ___/___/___
Signature of Representative *Date*

NOTE: See reverse side for analysis method numbers and sample type key.

EPA Analysis Methods for Trihalomethanes

501.1. — Analysis of Trihalomethanes in Drinking Water by Purge and Trap

501.2 — Analysis of Trihalomethanes in Drinking Water by Liquid/Liquid Extraction

501.3 — Measurement of Trihalomethanes in Drinking Water by Gas Chromatography/ Mass Spectrometry and Selected Ion Monitoring

524.1 — Volatile Organic Compounds in Water by Purge and Trap Gas Chromatography/ Mass Spectrometry

524.2 — Volatile Organics Compunds in Water by Purge and Trap Capillary Column Gas Chromatography/Mass Spectrometry

OR

Equivalent as determined by EPA and certified by the NJDEP Office of Quality Assurance

Sample Type

C — Check Sample

D — Regular Distribution System

M — Maximum Residence Time for THM's

P — Plant Tap (Treated Water) Sample

R — Raw Water Sample (Untreated)

S — Special Sample

NEW JERSEY DEPARTMENT OF ENVIRONMENTAL PROTECTION
BUREAU OF SAFE DRINKING WATER
NEW JERSEY WATER SUPPLY SYSTEM
TTHM AVERAGES FOR LAST 4 QUARTERS

			TOTAL NUMBER OF SAMPLES TAKEN	AVERAGE VALUE
0102001	S	ATLANTIC CITY MUA		
		04/01/87 - 06/30/87	4	68.77
		07/01/87 - 09/30/87	4	51.85
		10/01/87 - 12/31/87	4	11.02
		TOTAL	12	43.88
0103001	G	BRIGANTINE WATER DEPARTM	TOTAL NUMBER OF SAMPLES TAKEN	AVERAGE VALUE
		04/01/87 - 06/30/87	4	0.60
		07/01/87 - 09/30/87	4	2.22
		10/01/87 - 12/31/87	4	1.17
		01/01/88 - 03/31/88	4	0.88
		TOTAL	16	1.22
0111003	G	NEW JERSEY WATER GALLOWA	TOTAL NUMBER OF SAMPLES TAKEN	AVERAGE VALUE
		04/01/87 - 06/30/87	4	4.25
		07/01/87 - 09/30/87	4	1.50
		TOTAL	8	2.87
0116001	G	MARGATE WATER DEPARTMENT	TOTAL NUMBER OF SAMPLES TAKEN	AVERAGE VALUE
		04/01/87 - 06/30/87	4	0.97
		07/01/87 - 09/30/87	4	1.80
		10/01/87 - 12/31/87	4	0.95
		01/01/88 - 03/31/88	4	< 0.50
		TOTAL	16	1.06
0119002	G	NJ AMERICAN W CO ATLANTI	TOTAL NUMBER OF SAMPLES TAKEN	AVERAGE VALUE
		04/01/87 - 06/30/87	4	1.25
		07/01/87 - 09/30/87	4	1.75
		10/01/87 - 12/31/87	4	1.00
		TOTAL	12	1.33
0122001	G	VENTNOR CITY W & S UTILI	TOTAL NUMBER OF SAMPLES TAKEN	AVERAGE VALUE
		04/01/87 - 06/30/87	1	24.00
		07/01/87 - 09/30/87	1	21.40
		10/01/87 - 12/31/87	1	4.50
		01/01/88 - 03/31/88	1	2.68
		TOTAL	4	13.14

NEW JERSEY DEPARTMENT OF ENVIRONMENTAL PROTECTION
BUREAU OF SAFE DRINKING WATER
NEW JERSEY WATER SUPPLY SYSTEM
TTHM AVERAGES FOR LAST 4 QUARTERS

			TOTAL NUMBER OF SAMPLES TAKEN	AVERAGE VALUE
0217001	G	FAIRLAWN WATER DEPT		
		04/01/87 - 06/30/87	4	70.00
		07/01/87 - 09/30/87	4	41.25
		10/01/87 - 12/31/87	4	13.85
		01/01/88 - 03/31/88	4	10.75
		TOTAL	16	33.96
0221001	G	GARFIELD W DEPT	TOTAL NUMBER OF SAMPLES TAKEN	AVERAGE VALUE
		04/01/87 - 06/30/87	4	48.72
		07/01/87 - 09/30/87	4	45.42
		10/01/87 - 12/31/87	4	23.70
		01/01/88 - 03/31/88	4	32.65
		TOTAL	16	37.62
0228001	G	HO-HO-KUS WATER DEPT	TOTAL NUMBER OF SAMPLES TAKEN	AVERAGE VALUE
		04/01/87 - 06/30/87	1	2.00
		07/01/87 - 09/30/87	1	8.00
		01/01/88 - 03/31/88	1	3.00
		TOTAL	3	4.33
0231001	G	LODI WATER DEPT	TOTAL NUMBER OF SAMPLES TAKEN	AVERAGE VALUE
		04/01/87 - 06/30/87	4	113.82
		10/01/87 - 12/31/87	4	67.50
		01/01/88 - 03/31/88	4	58.37
		TOTAL	12	79.90
0233001	G	MAHWAH WATER DEPT	TOTAL NUMBER OF SAMPLES TAKEN	AVERAGE VALUE
		04/01/87 - 06/30/87	4	1.75
		07/01/87 - 09/30/87	4	3.25
		10/01/87 - 12/31/87	4	1.00
		01/01/88 - 03/31/88	4	3.75
		TOTAL	16	2.44
0238001	S	HACKENSACK WATER CO	TOTAL NUMBER OF SAMPLES TAKEN	AVERAGE VALUE
		04/01/87 - 06/30/87	8	71.12
		07/01/87 - 09/30/87	7	100.71
		10/01/87 - 12/31/87	8	69.00
		TOTAL	23	79.39

NEW JERSEY DEPARTMENT OF ENVIRONMENTAL PROTECTION
BUREAU OF SAFE DRINKING WATER
NEW JERSEY WATER SUPPLY SYSTEM
TTHM AVERAGES FOR LAST 4 QUARTERS

			TOTAL NUMBER OF SAMPLES TAKEN	AVERAGE VALUE
0242001	G	OAKLAND WATER DEPT		
		04/01/87 - 06/30/87	4	1.00
		07/01/87 - 09/30/87	4	< 1.00
		10/01/87 - 12/31/87	4	< 1.00
		01/01/88 - 03/31/88	4	2.75
		TOTAL	16	1.44
0247001	G	PARK RIDGE WATER DEPT	TOTAL NUMBER OF SAMPLES TAKEN	AVERAGE VALUE
		04/01/87 - 06/30/87	4	1.25
		07/01/87 - 09/30/87	4	< 1.00
		10/01/87 - 12/31/87	4	< 1.00
		01/01/88 - 03/31/88	4	< 1.00
		TOTAL	16	1.06
0248001	G	RAMSEY WATER DEPT	TOTAL NUMBER OF SAMPLES TAKEN	AVERAGE VALUE
		07/01/87 - 09/30/87	1	5.00
		10/01/87 - 12/31/87	1	< 1.00
		TOTAL	2	3.00
0251001	G	RIDGEWOOD WATER DEPT	TOTAL NUMBER OF SAMPLES TAKEN	AVERAGE VALUE
		07/01/87 - 09/30/87	1	< 1.00
		10/01/87 - 12/31/87	1	< 1.00
		01/01/88 - 03/31/88	1	1.00
		TOTAL	3	1.00
0264001	G	WALDWICK WATER DEPT	TOTAL NUMBER OF SAMPLES TAKEN	AVERAGE VALUE
		04/01/87 - 06/30/87	4	1.00
		07/01/87 - 09/30/87	4	2.00
		10/01/87 - 12/31/87	4	1.75
		TOTAL	12	1.58
0303001	G	BORDENTOWN WATER DEPARTM	TOTAL NUMBER OF SAMPLES TAKEN	AVERAGE VALUE
		04/01/87 - 06/30/87	4	0.65
		07/01/87 - 09/30/87	5	20.36
		10/01/87 - 12/31/87	4	3.05
		01/01/88 - 03/31/88	4	< 0.50
		TOTAL	17	6.98

NEW JERSEY DEPARTMENT OF ENVIRONMENTAL PROTECTION
BUREAU OF SAFE DRINKING WATER
NEW JERSEY WATER SUPPLY SYSTEM
TTHM AVERAGES FOR LAST 4 QUARTERS

			TOTAL NUMBER OF SAMPLES TAKEN	AVERAGE VALI
0305001	S	BURLINGTON CITY WATER DE		
		04/01/87 - 06/30/87	4	49.00
		07/01/87 - 09/30/87	4	53.75
		10/01/87 - 12/31/87	4	53.52
		01/01/88 - 03/31/88	4	79.67
		TOTAL	16	58.99
0306001	G	BURLINGTON TWP W DEPT	TOTAL NUMBER OF SAMPLES TAKEN	AVERAGE VALI
		04/01/87 - 06/30/87	1	6.60
		10/01/87 - 12/31/87	1	< 1.00
		01/01/88 - 03/31/88	1	< 0.10
		TOTAL	3	2.57
0313001	G	EVESHAM MUA	TOTAL NUMBER OF SAMPLES TAKEN	AVERAGE VALI
		04/01/87 - 06/30/87	1	1.80
		07/01/87 - 09/30/87	1	3.10
		10/01/87 - 12/31/87	1	2.10
		01/01/88 - 03/31/88	1	< 0.50
		TOTAL	4	1.87
0319001	G	MAPLE SHADE WATER DEPART	TOTAL NUMBER OF SAMPLES TAKEN	AVERAGE VALI
		04/01/87 - 06/30/87	4	3.87
		07/01/87 - 09/30/87	4	0.50
		10/01/87 - 12/31/87	4	< 0.50
		TOTAL	12	1.62
0322001	G	MOORESTOWN WATER DEPT	TOTAL NUMBER OF SAMPLES TAKEN	AVERAGE VALI
		04/01/87 - 06/30/87	1	4.20
		07/01/87 - 09/30/87	1	0.50
		10/01/87 - 12/31/87	1	< 1.00
		01/01/88 - 03/31/88	1	< 0.10
		TOTAL	4	1.45
0323001	G	MOUNT HOLLY WATER COMPAN	TOTAL NUMBER OF SAMPLES TAKEN	AVERAGE VALI
		04/01/87 - 06/30/87	4	4.00
		07/01/87 - 09/30/87	4	4.00
		10/01/87 - 12/31/87	4	< 1.00
		01/01/88 - 03/31/88	4	< 1.00
		TOTAL	16	2.50

NEW JERSEY DEPARTMENT OF ENVIRONMENTAL PROTECTION
BUREAU OF SAFE DRINKING WATER
NEW JERSEY WATER SUPPLY SYSTEM
TTHM AVERAGES FOR LAST 4 QUARTERS

			TOTAL NUMBER OF SAMPLES TAKEN	AVERAGE VALUE
0324001	G	MT LAUREL TWP MUA RAMB S		
		04/01/87 - 06/30/87	4	0.69
		07/01/87 - 09/30/87	4	0.50
		10/01/87 - 12/31/87	4	2.30
		TOTAL	12	1.16
0325001	S	U S ARMY FORT DIX	TOTAL NUMBER OF SAMPLES TAKEN	AVERAGE VALUE
		04/01/87 - 06/30/87	8	43.00
		07/01/87 - 09/30/87	8	72.87
		10/01/87 - 12/31/87	8	30.81
		TOTAL	24	48.90
0326006	G	MCGUIRE AFB	TOTAL NUMBER OF SAMPLES TAKEN	AVERAGE VALUE
		04/01/87 - 06/30/87	1	2.80
		07/01/87 - 09/30/87	1	1.00
		10/01/87 - 12/31/87	1	2.30
		01/01/88 - 03/31/88	1	0.50
		TOTAL	4	1.65
0327001	G	NJ AMERICAN W CO DELAWAR	TOTAL NUMBER OF SAMPLES TAKEN	AVERAGE VALUE
		04/01/87 - 06/30/87	4	1.00
		07/01/87 - 09/30/87	4	1.00
		10/01/87 - 12/31/87	4	1.50
		01/01/88 - 03/31/88	4	1.75
		TOTAL	16	1.31
0329004	G	PEMBERTON TWP DEPT MAIN	TOTAL NUMBER OF SAMPLES TAKEN	AVERAGE VALUE
		04/01/87 - 06/30/87	4	0.50
		07/01/87 - 09/30/87	4	2.42
		10/01/87 - 12/31/87	7	0.50
		01/01/88 - 03/31/88	6	< 0.50
		TOTAL	21	0.87
0338001	G	WILLINGBORO MUA	TOTAL NUMBER OF SAMPLES TAKEN	AVERAGE VALUE
		04/01/87 - 06/30/87	1	1.00
		07/01/87 - 09/30/87	1	1.00
		10/01/87 - 12/31/87	1	2.50
		01/01/88 - 03/31/88	1	< 0.50
		TOTAL	4	1.25

NEW JERSEY DEPARTMENT OF ENVIRONMENTAL PROTECTION
BUREAU OF SAFE DRINKING WATER
NEW JERSEY WATER SUPPLY SYSTEM
TTHM AVERAGES FOR LAST 4 QUARTERS

			TOTAL NUMBER OF SAMPLES TAKEN	AVERAGE VALUE
0324001	G	MT LAUREL TWP MUA RAMB S		
		04/01/87 - 06/30/87	4	0.69
		07/01/87 - 09/30/87	4	0.50
		10/01/87 - 12/31/87	4	2.30
		TOTAL	12	1.16
0325001	S	U S ARMY FORT DIX	TOTAL NUMBER OF SAMPLES TAKEN	AVERAGE VALUE
		04/01/87 - 06/30/87	8	43.00
		07/01/87 - 09/30/87	8	72.87
		10/01/87 - 12/31/87	8	30.81
		TOTAL	24	48.90
0326006	G	MCGUIRE AFB	TOTAL NUMBER OF SAMPLES TAKEN	AVERAGE VALUE
		04/01/87 - 06/30/87	1	2.80
		07/01/87 - 09/30/87	1	1.00
		10/01/87 - 12/31/87	1	2.30
		01/01/88 - 03/31/88	1	0.50
		TOTAL	4	1.65
0327001	G	NJ AMERICAN W CO DELAWAR	TOTAL NUMBER OF SAMPLES TAKEN	AVERAGE VALUE
		04/01/87 - 06/30/87	4	1.00
		07/01/87 - 09/30/87	4	1.00
		10/01/87 - 12/31/87	4	1.50
		01/01/88 - 03/31/88	4	1.75
		TOTAL	16	1.31
0329004	G	PEMBERTON TWP DEPT MAIN	TOTAL NUMBER OF SAMPLES TAKEN	AVERAGE VALUE
		04/01/87 - 06/30/87	4	0.50
		07/01/87 - 09/30/87	4	2.42
		10/01/87 - 12/31/87	7	0.50
		01/01/88 - 03/31/88	6	< 0.50
		TOTAL	21	0.87
0338001	G	WILLINGBORO MUA	TOTAL NUMBER OF SAMPLES TAKEN	AVERAGE VALUE
		04/01/87 - 06/30/87	1	1.00
		07/01/87 - 09/30/87	1	1.00
		10/01/87 - 12/31/87	1	2.50
		01/01/88 - 03/31/88	1	< 0.50
		TOTAL	4	1.25

NEW JERSEY DEPARTMENT OF ENVIRONMENTAL PROTECTION
BUREAU OF SAFE DRINKING WATER
NEW JERSEY WATER SUPPLY SYSTEM
TTHM AVERAGES FOR LAST 4 QUARTERS

			TOTAL NUMBER OF SAMPLES TAKEN	AVERAGE VALUE
0404001	G	BELLMAWR WATER DEPT		
		04/01/87 - 06/30/87	4	0.50
		07/01/87 - 09/30/87	4	0.50
		10/01/87 - 12/31/87	4	1.10
		TOTAL	12	0.70
0405001	G	BERLIN WATER DEPT	TOTAL NUMBER OF SAMPLES TAKEN	AVERAGE VALUE
		04/01/87 - 06/30/87	4	2.25
		07/01/87 - 09/30/87	4	2.27
		10/01/87 - 12/31/87	4	1.25
		01/01/88 - 03/31/88	4	2.27
		TOTAL	16	2.01
0407001	G	BROOKLAWN WATER DEPARTME	TOTAL NUMBER OF SAMPLES TAKEN	AVERAGE VALUE
		04/01/87 - 06/30/87	1	1.60
		01/01/88 - 03/31/88	1	0.40
		TOTAL	2	1.00
0408001	G	CAMDEN CITY W DEPT	TOTAL NUMBER OF SAMPLES TAKEN	AVERAGE VALUE
		04/01/87 - 06/30/87	4	1.32
		07/01/87 - 09/30/87	4	1.15
		10/01/87 - 12/31/87	4	< 1.00
		TOTAL	12	1.16
0408002	G	NJ AMERICAN W CO CAMDEN	TOTAL NUMBER OF SAMPLES TAKEN	AVERAGE VALUE
		04/01/87 - 06/30/87	4	1.00
		07/01/87 - 09/30/87	4	1.00
		10/01/87 - 12/31/87	4	3.75
		01/01/88 - 03/31/88	4	3.50
		TOTAL	16	2.31
0412001	G	COLLINGSWOOD WATER DEPAR	TOTAL NUMBER OF SAMPLES TAKEN	AVERAGE VALUE
		04/01/87 - 06/30/87	4	0.50
		07/01/87 - 09/30/87	4	0.50
		10/01/87 - 12/31/87	4	6.56
		01/01/88 - 03/31/88	4	3.78
		TOTAL	16	2.84

NEW JERSEY DEPARTMENT OF ENVIRONMENTAL PROTECTION
BUREAU OF SAFE DRINKING WATER
NEW JERSEY WATER SUPPLY SYSTEM
TTHM AVERAGES FOR LAST 4 QUARTERS

			TOTAL NUMBER OF SAMPLES TAKEN	AVERAGE VALUE
0414001	G	GLOUCESTER CITY W DEPT		
		04/01/87 - 06/30/87	4	6.57
		07/01/87 - 09/30/87	4	4.70
		10/01/87 - 12/31/87	4	11.42
		01/01/88 - 03/31/88	4	3.55
		TOTAL	16	6.56
0415002	G	GARDEN STATE W CO BLACKW	TOTAL NUMBER OF SAMPLES TAKEN	AVERAGE VALUE
		04/01/87 - 06/30/87	17	4.91
		07/01/87 - 09/30/87	25	0.50
		10/01/87 - 12/31/87	24	0.81
		01/01/88 - 03/31/88	17	1.08
		TOTAL	83	1.61
0416001	G	HADDON TWP WATER DEPARTM	TOTAL NUMBER OF SAMPLES TAKEN	AVERAGE VALUE
		04/01/87 - 06/30/87	4	0.50
		07/01/87 - 09/30/87	4	0.50
		TOTAL	8	0.50
0417001	G	HADDONFIELD WATER DEPART	TOTAL NUMBER OF SAMPLES TAKEN	AVERAGE VALUE
		07/01/87 - 09/30/87	4	0.57
		10/01/87 - 12/31/87	4	2.95
		01/01/88 - 03/31/88	4	0.63
		TOTAL	12	1.38
0418001	G	NJ AMERICAN W CO HADDON	TOTAL NUMBER OF SAMPLES TAKEN	AVERAGE VALUE
		04/01/87 - 06/30/87	4	1.00
		07/01/87 - 09/30/87	7	2.14
		10/01/87 - 12/31/87	4	7.50
		01/01/88 - 03/31/88	4	2.00
		TOTAL	19	3.00
0424001	G	MERCHANTVILLE PENNSAUKEN	TOTAL NUMBER OF SAMPLES TAKEN	AVERAGE VALUE
		04/01/87 - 06/30/87	4	0.92
		07/01/87 - 09/30/87	4	0.50
		10/01/87 - 12/31/87	4	6.72
		01/01/88 - 03/31/88	4	< 0.50
		TOTAL	16	2.16

NEW JERSEY DEPARTMENT OF ENVIRONMENTAL PROTECTION
BUREAU OF SAFE DRINKING WATER
NEW JERSEY WATER SUPPLY SYSTEM
TTHM AVERAGES FOR LAST 4 QUARTERS

			TOTAL NUMBER OF SAMPLES TAKEN	AVERAGE VALUE
0436007	G	WINSLOW TWP W & S DEPT		
		04/01/87 - 06/30/87	4	2.07
		07/01/87 - 09/30/87	4	0.50
		10/01/87 - 12/31/87	4	1.32
		01/01/88 - 03/31/88	4	0.70
		TOTAL	16	1.15
0501001	G	AVALON WATER AND SEWERAG	TOTAL NUMBER OF SAMPLES TAKEN	AVERAGE VALUE
		04/01/87 - 06/30/87	1	5.00
		10/01/87 - 12/31/87	1	0.16
		01/01/88 - 03/31/88	1	< 0.50
		TOTAL	3	1.89
0502001	G	CAPE MAY WATER & SEWER U	TOTAL NUMBER OF SAMPLES TAKEN	AVERAGE VALUE
		04/01/87 - 06/30/87	5	20.60
		07/01/87 - 09/30/87	4	5.00
		01/01/88 - 03/31/88	5	1.48
		TOTAL	14	9.31
0506010	G	NJ AMERICAN W CO NEPTUNE	TOTAL NUMBER OF SAMPLES TAKEN	AVERAGE VALUE
		04/01/87 - 06/30/87	4	1.25
		07/01/87 - 09/30/87	4	4.00
		10/01/87 - 12/31/87	4	1.75
		TOTAL	12	2.33
0508001	G	NJ AMERICAN W CO OCEAN C	TOTAL NUMBER OF SAMPLES TAKEN	AVERAGE VALUE
		04/01/87 - 06/30/87	4	6.50
		07/01/87 - 09/30/87	4	4.50
		10/01/87 - 12/31/87	4	6.00
		TOTAL	12	5.67
0510001	G	STONE HARBOR W DEPT	TOTAL NUMBER OF SAMPLES TAKEN	AVERAGE VALUE
		04/01/87 - 06/30/87	4	1.07
		07/01/87 - 09/30/87	8	5.00
		01/01/88 - 03/31/88	4	0.55
		TOTAL	16	2.91

NEW JERSEY DEPARTMENT OF ENVIRONMENTAL PROTECTION
BUREAU OF SAFE DRINKING WATER
NEW JERSEY WATER SUPPLY SYSTEM
TTHM AVERAGES FOR LAST 4 QUARTERS

0511001	G	NJ AMERICAN W CO STRATHM	TOTAL NUMBER OF SAMPLES TAKEN	AVERAGE VALUE
		04/01/87 - 06/30/87	4	7.75
		07/01/87 - 09/30/87	4	5.75
		10/01/87 - 12/31/87	4	8.75
		TOTAL	12	7.42
0514001	G	WILDWOOD W DEPT, CITY OF	TOTAL NUMBER OF SAMPLES TAKEN	AVERAGE VALUE
		04/01/87 - 06/30/87	4	11.15
		07/01/87 - 09/30/87	4	104.25
		10/01/87 - 12/31/87	4	4.57
		TOTAL	12	39.99
0601001	G	BRIDGETON W DEPT	TOTAL NUMBER OF SAMPLES TAKEN	AVERAGE VALUE
		04/01/87 - 06/30/87	3	3.25
		07/01/87 - 09/30/87	4	0.50
		10/01/87 - 12/31/87	4	< 0.50
		01/01/88 - 03/31/88	4	2.44
		TOTAL	15	1.57
0610001	G	MILLVILLE W DEPT	TOTAL NUMBER OF SAMPLES TAKEN	AVERAGE VALUE
		07/01/87 - 09/30/87	4	1.00
		TOTAL	4	1.00
0614003	G	VINELAND WATER & SEWER U	TOTAL NUMBER OF SAMPLES TAKEN	AVERAGE VALUE
		04/01/87 - 06/30/87	1	0.50
		07/01/87 - 09/30/87	1	0.50
		10/01/87 - 12/31/87	1	< 0.50
		01/01/88 - 03/31/88	1	< 0.50
		TOTAL	4	0.50
0705001	G	EAST ORANGE WATER DEPT	TOTAL NUMBER OF SAMPLES TAKEN	AVERAGE VALUE
		04/01/87 - 06/30/87	4	1.77
		07/01/87 - 09/30/87	4	4.27
		10/01/87 - 12/31/87	4	3.90
		TOTAL	12	3.32

NEW JERSEY DEPARTMENT OF ENVIRONMENTAL PROTECTION
BUREAU OF SAFE DRINKING WATER
NEW JERSEY WATER SUPPLY SYSTEM
TTHM AVERAGES FOR LAST 4 QUARTERS

			TOTAL NUMBER OF SAMPLES TAKEN	AVERAGE VALUE
0706001	G	ESSEX FELLS WATER DEPT		
		04/01/87 - 06/30/87	1	4.70
		07/01/87 - 09/30/87	1	0.30
		10/01/87 - 12/31/87	1	6.30
		01/01/88 - 03/31/88	1	4.72
		TOTAL	4	4.00
0710001	G	LIVINGSTON TWP DIV OF WA	TOTAL NUMBER OF SAMPLES TAKEN	AVERAGE VALUE
		04/01/87 - 06/30/87	1	2.80
		07/01/87 - 09/30/87	1	3.60
		10/01/87 - 12/31/87	1	6.28
		01/01/88 - 03/31/88	1	4.90
		TOTAL	4	4.39
0712001	S	NJ AMERICAN W CO SHORT H	TOTAL NUMBER OF SAMPLES TAKEN	AVERAGE VALUE
		04/01/87 - 06/30/87	12	33.33
		07/01/87 - 09/30/87	12	43.08
		10/01/87 - 12/31/87	12	22.17
		01/01/88 - 03/31/88	16	34.75
		TOTAL	52	33.44
0713001	G	MONTCLAIR WATER BUREAU	TOTAL NUMBER OF SAMPLES TAKEN	AVERAGE VALUE
		04/01/87 - 06/30/87	4	44.75
		07/01/87 - 09/30/87	4	59.25
		10/01/87 - 12/31/87	4	39.75
		01/01/88 - 03/31/88	4	43.25
		TOTAL	16	46.75
0714001	S	NEWARK WATER DEPT	TOTAL NUMBER OF SAMPLES TAKEN	AVERAGE VALUE
		04/01/87 - 06/30/87	4	88.50
		07/01/87 - 09/30/87	4	72.75
		10/01/87 - 12/31/87	5	69.27
		01/01/88 - 03/31/88	4	39.51
		TOTAL	17	67.61
0717001	S	ORANGE WATER DEPT	TOTAL NUMBER OF SAMPLES TAKEN	AVERAGE VALUE
		04/01/87 - 06/30/87	4	5.50
		10/01/87 - 12/31/87	7	18.26
		01/01/88 - 03/31/88	4	10.12
		TOTAL	15	12.69

NEW JERSEY DEPARTMENT OF ENVIRONMENTAL PROTECTION
BUREAU OF SAFE DRINKING WATER
NEW JERSEY WATER SUPPLY SYSTEM
TTHM AVERAGES FOR LAST 4 QUARTERS

			TOTAL NUMBER OF SAMPLES TAKEN	AVERAGE VALUE
0719001	G	SOUTH ORANGE W DEPT		
		04/01/87 - 06/30/87	4	67.05
		07/01/87 - 09/30/87	4	22.02
		10/01/87 - 12/31/87	4	34.07
		01/01/88 - 03/31/88	4	41.77
		TOTAL	16	41.23
0721001	P	WEST CALDWELL W DEPT	TOTAL NUMBER OF SAMPLES TAKEN	AVERAGE VALUE
		04/01/87 - 06/30/87	8	50.10
		07/01/87 - 09/30/87	8	63.15
		10/01/87 - 12/31/87	4	89.85
		01/01/88 - 03/31/88	4	51.37
		TOTAL	24	61.29
0802001	G	DEPTFORD TWP MUA	TOTAL NUMBER OF SAMPLES TAKEN	AVERAGE VALUE
		04/01/87 - 06/30/87	5	0.61
		07/01/87 - 09/30/87	5	0.50
		10/01/87 - 12/31/87	4	< 0.50
		01/01/88 - 03/31/88	4	< 0.50
		TOTAL	18	0.53
0806001	G	GLASSBORO WATER DEPARTME	TOTAL NUMBER OF SAMPLES TAKEN	AVERAGE VALUE
		04/01/87 - 06/30/87	4	0.57
		07/01/87 - 09/30/87	4	0.50
		10/01/87 - 12/31/87	4	0.82
		TOTAL	12	0.63
0809001	G	PENNS GROVE WAT SUP CO B	TOTAL NUMBER OF SAMPLES TAKEN	AVERAGE VALUE
		04/01/87 - 06/30/87	1	0.50
		07/01/87 - 09/30/87	1	3.40
		10/01/87 - 12/31/87	1	3.00
		01/01/88 - 03/31/88	1	2.30
		TOTAL	4	2.30
0811002	G	MONROE MUA	TOTAL NUMBER OF SAMPLES TAKEN	AVERAGE VALUE
		04/01/87 - 06/30/87	4	1.01
		07/01/87 - 09/30/87	4	0.50
		10/01/87 - 12/31/87	4	1.19
		01/01/88 - 03/31/88	4	< 0.50
		TOTAL	16	0.80

NEW JERSEY DEPARTMENT OF ENVIRONMENTAL PROTECTION
BUREAU OF SAFE DRINKING WATER
NEW JERSEY WATER SUPPLY SYSTEM
TTHM AVERAGES FOR LAST 4 QUARTERS

			TOTAL NUMBER OF SAMPLES TAKEN	AVERAGE VALUE
0812001	G	NATIONAL PARK WATER DEPA		
		04/01/87 - 06/30/87	1	0.50
		07/01/87 - 09/30/87	1	0.50
		10/01/87 - 12/31/87	1	1.20
		01/01/88 - 03/31/88	1	0.60
		TOTAL	4	0.70
0815001	G	PITMAN WATER DEPARTMENT	TOTAL NUMBER OF SAMPLES TAKEN	AVERAGE VALUE
		04/01/87 - 06/30/87	4	1.05
		07/01/87 - 09/30/87	4	5.00
		10/01/87 - 12/31/87	4	< 0.50
		01/01/88 - 03/31/88	4	0.90
		TOTAL	16	1.86
0818004	G	WASHINGTON TOWNSHIP MUA	TOTAL NUMBER OF SAMPLES TAKEN	AVERAGE VALUE
		04/01/87 - 06/30/87	1	0.90
		07/01/87 - 09/30/87	1	< 0.50
		10/01/87 - 12/31/87	1	1.50
		TOTAL	3	0.97
0820001	G	WEST DEPTFORD TWP W DEPT	TOTAL NUMBER OF SAMPLES TAKEN	AVERAGE VALUE
		04/01/87 - 06/30/87	4	0.50
		10/01/87 - 12/31/87	4	< 0.50
		TOTAL	8	0.50
0821001	G	WESTVILLE WATER DEPARTME	TOTAL NUMBER OF SAMPLES TAKEN	AVERAGE VALUE
		04/01/87 - 06/30/87	1	0.50
		07/01/87 - 09/30/87	1	1.60
		10/01/87 - 12/31/87	1	1.30
		01/01/88 - 03/31/88	1	1.00
		TOTAL	4	1.10
0822001	G	WOODBURY CITY W DEPT	TOTAL NUMBER OF SAMPLES TAKEN	AVERAGE VALUE
		04/01/87 - 06/30/87	4	0.50
		07/01/87 - 09/30/87	4	0.52
		10/01/87 - 12/31/87	4	0.72
		01/01/88 - 03/31/88	4	< 0.50
		TOTAL	16	0.56

NEW JERSEY DEPARTMENT OF ENVIRONMENTAL PROTECTION
BUREAU OF SAFE DRINKING WATER
NEW JERSEY WATER SUPPLY SYSTEM
TTHM AVERAGES FOR LAST 4 QUARTERS

			TOTAL NUMBER OF SAMPLES TAKEN	AVERAGE VALUE
0906001	S	DEPT OF WATER JERSEY CIT		
		04/01/87 - 06/30/87	4	41.27
		07/01/87 - 09/30/87	4	47.30
		01/01/88 - 03/31/88	4	40.00
		TOTAL	12	42.86
1005001	G	CLINTON W DEPT	TOTAL NUMBER OF SAMPLES TAKEN	AVERAGE VALUE
		04/01/87 - 06/30/87	4	0.50
		07/01/87 - 09/30/87	4	0.50
		01/01/88 - 03/31/88	4	1.07
		TOTAL	12	0.69
1011001	G	NJ AMERICAN W CO FRENCHT	TOTAL NUMBER OF SAMPLES TAKEN	AVERAGE VALUE
		01/01/88 - 03/31/88	4	1.50
		TOTAL	4	1.50
1101002	G	EAST WINDSOR MUA	TOTAL NUMBER OF SAMPLES TAKEN	AVERAGE VALUE
		04/01/87 - 06/30/87	1	0.50
		07/01/87 - 09/30/87	1	0.50
		10/01/87 - 12/31/87	1	< 0.50
		01/01/88 - 03/31/88	1	< 0.50
		TOTAL	4	0.50
1103001	G	GARDEN STATE W CO HAM SQ	TOTAL NUMBER OF SAMPLES TAKEN	AVERAGE VALUE
		04/01/87 - 06/30/87	8	0.50
		07/01/87 - 09/30/87	8	0.50
		10/01/87 - 12/31/87	8	< 0.50
		01/01/88 - 03/31/88	4	< 0.50
		TOTAL	28	0.50
1111001	S	TRENTON WATER DEPARTMENT	TOTAL NUMBER OF SAMPLES TAKEN	AVERAGE VALUE
		04/01/87 - 06/30/87	4	48.67
		07/01/87 - 09/30/87	4	65.62
		10/01/87 - 12/31/87	4	62.10
		01/01/88 - 03/31/88	4	31.93
		TOTAL	16	52.08

NEW JERSEY DEPARTMENT OF ENVIRONMENTAL PROTECTION
BUREAU OF SAFE DRINKING WATER
NEW JERSEY WATER SUPPLY SYSTEM
TTHM AVERAGES FOR LAST 4 QUARTERS

			TOTAL NUMBER OF SAMPLES TAKEN	AVERAGE VALUE
1204001	G	EAST BRUNSWICK W DEPT		
		04/01/87 - 06/30/87	4	43.65
		07/01/87 - 09/30/87	4	61.77
		10/01/87 - 12/31/87	4	25.25
		01/01/88 - 03/31/88	4	33.03
		TOTAL	16	40.93
1208001	G	NJ AMERICAN W CO JAMESBU		
		04/01/87 - 06/30/87	4	3.75
		07/01/87 - 09/30/87	4	4.25
		10/01/87 - 12/31/87	4	0.75
		TOTAL	12	2.92
1209002	G	OLD BRIDGE MUA		
		04/01/87 - 06/30/87	8	2.50
		07/01/87 - 09/30/87	10	4.69
		10/01/87 - 12/31/87	12	9.06
		01/01/88 - 03/31/88	12	9.12
		TOTAL	42	6.79
1213002	G	MONROE TWP MUA		
		04/01/87 - 06/30/87	8	0.95
		07/01/87 - 09/30/87	8	0.50
		10/01/87 - 12/31/87	8	< 0.50
		01/01/88 - 03/31/88	8	0.58
		TOTAL	32	0.63
1214001	S	NEW BRUNSWICK W DEPT		
		04/01/87 - 06/30/87	4	29.00
		07/01/87 - 09/30/87	4	0.40
		10/01/87 - 12/31/87	5	13.00
		01/01/88 - 03/31/88	4	37.50
		TOTAL	17	19.56
1215001	S	NORTH BRUNSWICK W DEPT		
		04/01/87 - 06/30/87	4	35.25
		07/01/87 - 09/30/87	4	26.50
		10/01/87 - 12/31/87	4	10.20
		01/01/88 - 03/31/88	4	15.82
		TOTAL	16	21.94

NEW JERSEY DEPARTMENT OF ENVIRONMENTAL PROTECTION
BUREAU OF SAFE DRINKING WATER
NEW JERSEY WATER SUPPLY SYSTEM
TTHM AVERAGES FOR LAST 4 QUARTERS

			TOTAL NUMBER OF SAMPLES TAKEN	AVERAGE VALUE
1216001	G	PERTH AMBOY DEPT OF MUNI		
		04/01/87 - 06/30/87	4	20.17
		07/01/87 - 09/30/87	4	22.15
		10/01/87 - 12/31/87	4	13.87
		01/01/88 - 03/31/88	4	3.54
		TOTAL	16	14.93
1219001	G	SAYREVILLE W DEPT	TOTAL NUMBER OF SAMPLES TAKEN	AVERAGE VALUE
		04/01/87 - 06/30/87	7	6.76
		07/01/87 - 09/30/87	8	7.06
		10/01/87 - 12/31/87	8	5.19
		01/01/88 - 03/31/88	8	5.25
		TOTAL	31	6.04
1221004	G	SOUTH BRUNSWICK TWP W DI	TOTAL NUMBER OF SAMPLES TAKEN	AVERAGE VALUE
		07/01/87 - 09/30/87	4	< 1.00
		10/01/87 - 12/31/87	4	7.45
		01/01/88 - 03/31/88	4	6.05
		TOTAL	12	4.83
1223001	G	SOUTH RIVER W DEPT	TOTAL NUMBER OF SAMPLES TAKEN	AVERAGE VALUE
		04/01/87 - 06/30/87	4	17.52
		07/01/87 - 09/30/87	4	82.92
		10/01/87 - 12/31/87	4	5.35
		01/01/88 - 03/31/88	4	6.47
		TOTAL	16	28.07
1225001	S	MIDDLESEX W CO	TOTAL NUMBER OF SAMPLES TAKEN	AVERAGE VALUE
		04/01/87 - 06/30/87	8	17.15
		07/01/87 - 09/30/87	8	31.01
		10/01/87 - 12/31/87	8	11.77
		01/01/88 - 03/31/88	8	4.31
		TOTAL	32	16.06
1315001	G	FREEHOLD BOROUGH WATER D	TOTAL NUMBER OF SAMPLES TAKEN	AVERAGE VALUE
		04/01/87 - 06/30/87	4	1.00
		10/01/87 - 12/31/87	4	< 1.00
		TOTAL	8	1.00

NEW JERSEY DEPARTMENT OF ENVIRONMENTAL PROTECTION
BUREAU OF SAFE DRINKING WATER
NEW JERSEY WATER SUPPLY SYSTEM
TTHM AVERAGES FOR LAST 4 QUARTERS

			TOTAL NUMBER OF SAMPLES TAKEN	AVERAGE VALUE
1316001	G	FREEHOLD TWP WATER DEPT		
		07/01/87 - 09/30/87	2	4.30
		10/01/87 - 12/31/87	1	2.00
		TOTAL	3	3.53
1321001	G	KEANSBURG MUA	TOTAL NUMBER OF SAMPLES TAKEN	AVERAGE VALUE
		04/01/87 - 06/30/87	4	1.00
		10/01/87 - 12/31/87	4	< 1.00
		01/01/88 - 03/31/88	4	< 1.00
		TOTAL	12	1.00
1326001	G	GORDON'S CORNER WATER CO	TOTAL NUMBER OF SAMPLES TAKEN	AVERAGE VALUE
		04/01/87 - 06/30/87	2	11.15
		07/01/87 - 09/30/87	2	1.00
		10/01/87 - 12/31/87	2	< 1.00
		01/01/88 - 03/31/88	2	2.75
		TOTAL	8	3.97
1328002	G	MARLBORO MUA	TOTAL NUMBER OF SAMPLES TAKEN	AVERAGE VALUE
		04/01/87 - 06/30/87	1	
		07/01/87 - 09/30/87	1	1.00
		10/01/87 - 12/31/87	1	< 1.00
		TOTAL	3	
1329001	G	MATAWAN BOROUGH WATER DE	TOTAL NUMBER OF SAMPLES TAKEN	AVERAGE VALUE
		04/01/87 - 06/30/87	4	4.75
		TOTAL	4	4.75
1330001	G	ABERDEEN TWP MUA	TOTAL NUMBER OF SAMPLES TAKEN	AVERAGE VALUE
		04/01/87 - 06/30/87	4	0.65
		07/01/87 - 09/30/87	4	0.33
		10/01/87 - 12/31/87	4	2.79
		TOTAL	12	1.26

NEW JERSEY DEPARTMENT OF ENVIRONMENTAL PROTECTION
BUREAU OF SAFE DRINKING WATER
NEW JERSEY WATER SUPPLY SYSTEM
TTHM AVERAGES FOR LAST 4 QUARTERS

			TOTAL NUMBER OF SAMPLES TAKEN	AVERAGE VALUE
1330002	G	ABERDEEN TWP WATER DEPT		
		04/01/87 - 06/30/87	4	1.00
		07/01/87 - 09/30/87	4	1.00
		10/01/87 - 12/31/87	4	< 1.00
		01/01/88 - 03/31/88	4	1.80
		TOTAL	16	1.20
1339001	G	SHORELANDS WATER CO.,INC		
		04/01/87 - 06/30/87	8	2.62
		07/01/87 - 09/30/87	8	1.71
		10/01/87 - 12/31/87	8	3.95
		01/01/88 - 03/31/88	8	4.00
		TOTAL	32	3.07
1340001	G	RED BANK WATER DEPT		
		04/01/87 - 06/30/87	8	1.60
		07/01/87 - 09/30/87	8	8.75
		10/01/87 - 12/31/87	8	3.67
		01/01/88 - 03/31/88	3	< 1.00
		TOTAL	27	4.27
1345001	S	NJ AMERICAN W CO MONMOUT		
		04/01/87 - 06/30/87	12	39.58
		07/01/87 - 09/30/87	12	65.67
		10/01/87 - 12/31/87	12	70.17
		01/01/88 - 03/31/88	8	22.52
		TOTAL	44	51.94
1352003	G	WALL TWP WATER DEPT		
		04/01/87 - 06/30/87	1	1.00
		07/01/87 - 09/30/87	1	1.00
		10/01/87 - 12/31/87	1	1.00
		TOTAL	3	1.00
1401001	S	BOONTON WATER DEPT		
		04/01/87 - 06/30/87	8	2.23
		07/01/87 - 09/30/87	8	34.02
		10/01/87 - 12/31/87	8	49.06
		01/01/88 - 03/31/88	8	10.77
		TOTAL	32	24.02

NEW JERSEY DEPARTMENT OF ENVIRONMENTAL PROTECTION
BUREAU OF SAFE DRINKING WATER
NEW JERSEY WATER SUPPLY SYSTEM
TTHM AVERAGES FOR LAST 4 QUARTERS

			TOTAL NUMBER OF SAMPLES TAKEN	AVERAGE VALUE
1403001	S	BUTLER WATER DEPT		
		04/01/87 - 06/30/87	4	33.25
		07/01/87 - 09/30/87	4	31.00
		10/01/87 - 12/31/87	4	13.50
		01/01/88 - 03/31/88	4	23.75
		TOTAL	16	25.37
1408001	G	DENVILLE TWP WATER DEPT	TOTAL NUMBER OF SAMPLES TAKEN	AVERAGE VALUE
		04/01/87 - 06/30/87	1	1.00
		07/01/87 - 09/30/87	1	1.00
		10/01/87 - 12/31/87	1	< 1.00
		TOTAL	3	1.00
1409001	G	DOVER WATER DEPARTMENT	TOTAL NUMBER OF SAMPLES TAKEN	AVERAGE VALUE
		04/01/87 - 06/30/87	1	2.00
		10/01/87 - 12/31/87	1	2.00
		01/01/88 - 03/31/88	1	< 1.00
		TOTAL	3	1.67
1410001	G	EAST HANOVER TWP WATER D	TOTAL NUMBER OF SAMPLES TAKEN	AVERAGE VALUE
		04/01/87 - 06/30/87	4	2.25
		07/01/87 - 09/30/87	4	4.25
		10/01/87 - 12/31/87	4	3.75
		TOTAL	12	3.42
1411001	G	FLORHAM PARK WATER DEPT	TOTAL NUMBER OF SAMPLES TAKEN	AVERAGE VALUE
		04/01/87 - 06/30/87	1	< 1.00
		07/01/87 - 09/30/87	1	1.00
		10/01/87 - 12/31/87	1	2.00
		TOTAL	3	1.33
1417001	G	MADISON WATER DEPT	TOTAL NUMBER OF SAMPLES TAKEN	AVERAGE VALUE
		04/01/87 - 06/30/87	1	< 1.00
		07/01/87 - 09/30/87	1	1.00
		10/01/87 - 12/31/87	1	< 1.00
		01/01/88 - 03/31/88	1	< 1.00
		TOTAL	4	1.00

NEW JERSEY DEPARTMENT OF ENVIRONMENTAL PROTECTION
BUREAU OF SAFE DRINKING WATER
NEW JERSEY WATER SUPPLY SYSTEM
TTHM AVERAGES FOR LAST 4 QUARTERS

1424001	S	SOUTHEAST MORRIS COUNTY	TOTAL NUMBER OF SAMPLES TAKEN	AVERAGE VALUE
		04/01/87 - 06/30/87	16	1.44
		07/01/87 - 09/30/87	16	2.44
		TOTAL	32	1.94
1429001	G	PARSIPPANY-TROY HILLS W	TOTAL NUMBER OF SAMPLES TAKEN	AVERAGE VALUE
		04/01/87 - 06/30/87	4	1.25
		07/01/87 - 09/30/87	4	1.00
		01/01/88 - 03/31/88	4	1.25
		TOTAL	12	1.17
1431001	G	PEQUANNOCK TWP WATER DEP	TOTAL NUMBER OF SAMPLES TAKEN	AVERAGE VALUE
		04/01/87 - 06/30/87	4	32.35
		07/01/87 - 09/30/87	4	33.55
		10/01/87 - 12/31/87	4	2.15
		01/01/88 - 03/31/88	4	2.77
		TOTAL	16	17.71
1432001	G	MORRIS COUNTY MUA	TOTAL NUMBER OF SAMPLES TAKEN	AVERAGE VALUE
		04/01/87 - 06/30/87	4	1.50
		07/01/87 - 09/30/87	4	1.50
		10/01/87 - 12/31/87	4	0.76
		TOTAL	12	1.25
1435002	G	ROCKAWAY TWP WATER DEPT	TOTAL NUMBER OF SAMPLES TAKEN	AVERAGE VALUE
		04/01/87 - 06/30/87	4	1.00
		07/01/87 - 09/30/87	4	4.14
		10/01/87 - 12/31/87	4	3.62
		01/01/88 - 03/31/88	4	< 1.00
		TOTAL	16	2.44
1502001	G	NJ AMERICAN W CO OCEAN C	TOTAL NUMBER OF SAMPLES TAKEN	AVERAGE VALUE
		04/01/87 - 06/30/87	4	1.25
		07/01/87 - 09/30/87	4	1.25
		10/01/87 - 12/31/87	4	1.00
		TOTAL	12	1.17

NEW JERSEY DEPARTMENT OF ENVIRONMENTAL PROTECTION
BUREAU OF SAFE DRINKING WATER
NEW JERSEY WATER SUPPLY SYSTEM
TTHM AVERAGES FOR LAST 4 QUARTERS

			TOTAL NUMBER OF SAMPLES TAKEN	AVERAGE VALUE
1506001	G	BRICK TOWNSHIP MUA		
		07/01/87 - 09/30/87	11	62.13
		10/01/87 - 12/31/87	4	22.25
		01/01/88 - 03/31/88	4	64.00
		TOTAL	19	54.13
1507005	G	TOMS RIVER WATER COMPANY	TOTAL NUMBER OF SAMPLES TAKEN	AVERAGE VALUE
		04/01/87 - 06/30/87	1	1.00
		07/01/87 - 09/30/87	1	2.00
		10/01/87 - 12/31/87	1	12.20
		01/01/88 - 03/31/88	1	0.50
		TOTAL	4	3.92
1509001	G	HARVEY CEDARS WATER DEPT	TOTAL NUMBER OF SAMPLES TAKEN	AVERAGE VALUE
		07/01/87 - 09/30/87	2	2.90
		01/01/88 - 03/31/88	1	6.50
		TOTAL	3	4.10
1511001	G	JACKSON TWP MUA	TOTAL NUMBER OF SAMPLES TAKEN	AVERAGE VALUE
		04/01/87 - 06/30/87	5	4.08
		07/01/87 - 09/30/87	5	1.54
		10/01/87 - 12/31/87	1	2.10
		TOTAL	11	2.75
1511012	G	JACKSON TWP W DEPT(LEGLE	TOTAL NUMBER OF SAMPLES TAKEN	AVERAGE VALUE
		04/01/87 - 06/30/87	1	4.00
		07/01/87 - 09/30/87	1	2.30
		TOTAL	2	3.15
1514001	G	NJ AMERICAN W CO LAKEWOO	TOTAL NUMBER OF SAMPLES TAKEN	AVERAGE VALUE
		04/01/87 - 06/30/87	4	2.25
		07/01/87 - 09/30/87	4	1.25
		10/01/87 - 12/31/87	4	1.00
		TOTAL	12	1.50

NEW JERSEY DEPARTMENT OF ENVIRONMENTAL PROTECTION
BUREAU OF SAFE DRINKING WATER
NEW JERSEY WATER SUPPLY SYSTEM
TTHM AVERAGES FOR LAST 4 QUARTERS

			TOTAL NUMBER OF SAMPLES TAKEN	AVERAGE VALUE
1514002	G	LAKEWOOD TWP MUA		
		01/01/88 - 03/31/88	4	0.70
		TOTAL	4	0.70
1516001	G	LITTLE EGG HARBOR TWP MU		
		04/01/87 - 06/30/87	3	16.45
		07/01/87 - 09/30/87	4	13.74
		10/01/87 - 12/31/87	4	8.75
		TOTAL	11	12.66
1518004	G	CRESTWOOD VILLAGE W CO		
		04/01/87 - 06/30/87	1	7.85
		07/01/87 - 09/30/87	1	4.54
		10/01/87 - 12/31/87	1	9.04
		TOTAL	3	7.14
1524001	G	POINT PLEASANT WATER DEP		
		04/01/87 - 06/30/87	8	2.31
		07/01/87 - 09/30/87	8	1.00
		10/01/87 - 12/31/87	8	< 1.00
		01/01/88 - 03/31/88	4	< 1.00
		TOTAL	28	1.37
1601001	P	BLOOMINGDALE WATER DEPT	TOTAL NUMBER OF SAMPLES TAKEN	AVERAGE VALUE
		10/01/87 - 12/31/87	4	39.80
		TOTAL	4	39.80
1603001	S	HALEDON WATER DEPT	TOTAL NUMBER OF SAMPLES TAKEN	AVERAGE VALUE
		04/01/87 - 06/30/87	4	149.75
		07/01/87 - 09/30/87	4	113.25
		10/01/87 - 12/31/87	4	107.50
		01/01/88 - 03/31/88	4	112.00
		TOTAL	16	120.62

NEW JERSEY DEPARTMENT OF ENVIRONMENTAL PROTECTION
BUREAU OF SAFE DRINKING WATER
NEW JERSEY WATER SUPPLY SYSTEM
TTHM AVERAGES FOR LAST 4 QUARTERS

			TOTAL NUMBER OF SAMPLES TAKEN	AVERAGE VALUE
1604001	G	HAWTHORNE W DEPT		
		04/01/87 - 06/30/87	4	2.25
		07/01/87 - 09/30/87	4	14.00
		10/01/87 - 12/31/87	4	4.00
		01/01/88 - 03/31/88	4	7.50
		TOTAL	16	6.94
1605002	S	PASSAIC VALLEY W COMM	TOTAL NUMBER OF SAMPLES TAKEN	AVERAGE VALUE
		04/01/87 - 06/30/87	4	52.60
		07/01/87 - 09/30/87	4	95.55
		10/01/87 - 12/31/87	4	52.37
		01/01/88 - 03/31/88	4	38.02
		TOTAL	16	59.64
1609001	G	POMPTON LAKES MUA	TOTAL NUMBER OF SAMPLES TAKEN	AVERAGE VALUE
		04/01/87 - 06/30/87	1	< 1.00
		07/01/87 - 09/30/87	1	< 1.00
		10/01/87 - 12/31/87	1	< 1.00
		01/01/88 - 03/31/88	4	1.75
		TOTAL	7	1.43
1613001	S	N.J.D.W.S.C. WANAQUE NO.	TOTAL NUMBER OF SAMPLES TAKEN	AVERAGE VALUE
		04/01/87 - 06/30/87	5	35.20
		07/01/87 - 09/30/87	5	42.80
		10/01/87 - 12/31/87	5	40.43
		01/01/88 - 03/31/88	5	30.67
		TOTAL	20	37.28
1613002	G	WANAQUE W DEPT	TOTAL NUMBER OF SAMPLES TAKEN	AVERAGE VALUE
		04/01/87 - 06/30/87	4	5.30
		07/01/87 - 09/30/87	4	3.90
		10/01/87 - 12/31/87	4	2.55
		01/01/88 - 03/31/88	4	1.85
		TOTAL	16	3.40
1614001	G	WAYNE TWP DIVISION OF WA	TOTAL NUMBER OF SAMPLES TAKEN	AVERAGE VALUE
		04/01/87 - 06/30/87	4	70.37
		07/01/87 - 09/30/87	4	61.07
		10/01/87 - 12/31/87	4	58.12
		01/01/88 - 03/31/88	4	40.62
		TOTAL	16	57.55

NEW JERSEY DEPARTMENT OF ENVIRONMENTAL PROTECTION
BUREAU OF SAFE DRINKING WATER
NEW JERSEY WATER SUPPLY SYSTEM
TTHM AVERAGES FOR LAST 4 QUARTERS

			TOTAL NUMBER OF SAMPLES TAKEN	AVERAGE VALUE
1707001	G	PENNS GROVE WATER SUPPLY		
		04/01/87 - 06/30/87	4	1.67
		07/01/87 - 09/30/87	4	0.62
		10/01/87 - 12/31/87	4	3.37
		01/01/88 - 03/31/88	4	1.25
		TOTAL	16	1.73
1708001	G	PENNSVILLE TWP W DEPT	TOTAL NUMBER OF SAMPLES TAKEN	AVERAGE VALUE
		04/01/87 - 06/30/87	3	37.00
		07/01/87 - 09/30/87	3	3.43
		10/01/87 - 12/31/87	3	< 1.00
		TOTAL	9	13.81
1808001	P	FRANKLIN TWP DEPT PUBLIC	TOTAL NUMBER OF SAMPLES TAKEN	AVERAGE VALUE
		04/01/87 - 06/30/87	4	51.75
		07/01/87 - 09/30/87	4	36.25
		10/01/87 - 12/31/87	4	9.60
		TOTAL	12	32.53
1811001	G	MANVILLE W DEPT	TOTAL NUMBER OF SAMPLES TAKEN	AVERAGE VALUE
		04/01/87 - 06/30/87	4	19.47
		07/01/87 - 09/30/87	4	17.42
		10/01/87 - 12/31/87	5	14.92
		01/01/88 - 03/31/88	4	8.60
		TOTAL	17	15.09
1906002	S	FRANKLIN BOARD OF PUBLIC	TOTAL NUMBER OF SAMPLES TAKEN	AVERAGE VALUE
		04/01/87 - 06/30/87	4	12.75
		07/01/87 - 09/30/87	4	74.50
		TOTAL	8	43.62
2004002	S	ELIZABETHTOWN WATER CO	TOTAL NUMBER OF SAMPLES TAKEN	AVERAGE VALUE
		04/01/87 - 06/30/87	36	22.50
		07/01/87 - 09/30/87	36	29.89
		10/01/87 - 12/31/87	36	16.50
		01/01/88 - 03/31/88	36	10.17
		TOTAL	144	19.76

NEW JERSEY DEPARTMENT OF ENVIRONMENTAL PROTECTION
BUREAU OF SAFE DRINKING WATER
NEW JERSEY WATER SUPPLY SYSTEM
TTHM AVERAGES FOR LAST 4 QUARTERS

			TOTAL NUMBER OF SAMPLES TAKEN	AVERAGE VALUE
2013001	S	RAHWAY W DEPT		
		04/01/87 - 06/30/87	8	47.75
		07/01/87 - 09/30/87	8	55.50
		10/01/87 - 12/31/87	8	36.84
		01/01/88 - 03/31/88	8	37.86
		TOTAL	32	44.49
2103001	S	NJ AMERICAN W CO BELVIDE	TOTAL NUMBER OF SAMPLES TAKEN	AVERAGE VALUE
		01/01/88 - 03/31/88	4	3.00
		TOTAL	4	3.00
2108001	S	HACKETTSTOWN MUA	TOTAL NUMBER OF SAMPLES TAKEN	AVERAGE VALUE
		04/01/87 - 06/30/87	5	7.06
		07/01/87 - 09/30/87	5	6.98
		TOTAL	10	7.02
2119001	G	GARDEN STATE W PHILLIPSB	TOTAL NUMBER OF SAMPLES TAKEN	AVERAGE VALUE
		04/01/87 - 06/30/87	8	18.47
		07/01/87 - 09/30/87	8	17.87
		10/01/87 - 12/31/87	8	17.51
		01/01/88 - 03/31/88	8	19.29
		TOTAL	32	18.29
2121001	G	NJ AMERICAN W CO WASHING	TOTAL NUMBER OF SAMPLES TAKEN	AVERAGE VALUE
		01/01/88 - 03/31/88	4	2.25
		TOTAL	4	2.25

Appendix D

APPENDIX D

THM SURVEY - BLANK QUESTIONNAIRE

TRIHALOMETHANE (THM) SURVEY

Prepared by:
New Jersey Department of Environmental Protection
Division of Water Resources
and
Camp Dresser and McKee Inc.
Edison, NJ

The purpose of this survey is to develop a database of information on the nature and occurrence of THMs. The information you provide will aid NJDEP in evaluating the feasibility of reducing trihalomethanes in the drinking water supplies within the State.

Urgent: Please respond by August 14, 1987. Please complete all questions by filling in the blanks. If an answer does not apply to your utility, please mark "NA" in the space provided. Feel free to include reasonable estimates based on your operational experience. If you have any questions, please call Paul Schorr at the New Jersey Department of Environmental Protection, Bureau of Safe Drinking Water. (609) 292-5550

A. Utility Background

Public Water System ID No. _____

Official Utility Name:

_____

Address: _____

_____

Name and Telephone Number of Executive Director:

_____

Name, Title and Telephone Number of Person Filling Out This Questionaire:

_____

_____

Population served: _____

Total treated water produced during most recent 12 month period: _____ MGD.

Delivered water cost in dollars per 1000 gallons: $ _____ per 1000 gallons.

$$\text{Delivered water cost} = \frac{\text{Total Revenues}}{\text{Total Gallons Delivered}}$$

B. THM Levels

1. Please provide copies of analytical data for 1984, 1985 and 1986 for concentrations of individual trihalomethanes: (chloroform, bromoform, dibromochloromethane and bromodichloromethane) in your distribution system. For your convenience, total trihalomethane values stored in our computer files have been attached. Please identify by street address the location of the sampling points.

2. Estimate the residence time of water in your distribution system for each sampling point. The residence time can be estimated by dividing the volume in the pipes and mains at the samplingpoint by the water demand (gallons per day) to the same point.

   location a _____ hours _____

   b _____ hours _____

   c _____ hours _____

   d _____ hours _____

3. Discuss briefly each sampling point location in relation to storage, chlorination, sources of water and water demand in the distribution system. If there are other factors that influence THM levels, note them briefly.

C. Watershed and Water Quality

1. Generally indicate for surface water supplies only.

Percent of Total Supply	Streams	Lakes & Reservoirs	Wells	Purchased Water
%				
%				

Land Use for Surface Watersheds or Groundwater Recharge Areas (check if applicable)

rural				
suburban				
urban				
agricultural				

2. Indicate typical raw water concentrations if measured. Note if there are significant seasonal variations or other factors that have influenced the THM results.

	typical value	seasonal variation
a. pH		
b. Color (apparent _____ or true _____)		
c. Turbidity (NTU)		
d. Ammonia as N (mg/l)		
e. Chlorine Demand (mg/l)		
f. Total Organic Nitrogen (mg/l)		
g. Total Organic Carbon (mg/l)		
h. Total Coliform (MPN/100 ml)		
i. Odor		

Other parameters that may be of interest if measured include:

_____

j. Total Trihalomethane Formation Potential (μg/l)		
k. Kjeldahl Nitrogen (mg/l)		
l. Phenols (mg/l)		
m. Total Organic Halides (μg/l)		
n. Purgeable Organic Halides (μg/l)		

Discussion _____

_____

_____

_____

3. Non-THM Disinfection By-Products
If you have taken priority pollutant scans or performed a "tentative peak identification" on raw or treated water, please indicate if this data could be made available to us.

Response _____

_____

D. Treatment and Finished Water

1. If THM results are reported for more than one plant or source identify the plant referred to in your response.

   Check the treatment processes used:

   Reservoir Aeration _____
   Algae Control _____
   Aeration _____
   - for taste and odor _____
   - for VOC removal _____
   - for metals oxidation _____

   Predisinfection _____
   Preoxidation _____
   pH Control _____
   Softening _____
   - Lime/Ash Soda _____
   - Ion Exchange _____

   Powdered Activated Carbon _____
   Flocculation _____ Detention (hr) _____
   Settling/Clarification _____ Detention (hr) _____
   Granular Activated Carbon _____ EBCT (minutes) _____
   Filtration _____
   - Conventional _____
   - Slow Sand _____
   - Direct _____
   - Other _____

   Post Disinfection _____
   - Chlorine _____
   - Chloramines _____

   No Treatment _____

2. If oxidants/disinfectants are added at locations other than the three specified below, describe the other location. Specify typical dosage or place a check mark.

	Presettling (mg/l)	Postsettling (mg/l)	Postfilter (mg/l)	Other Location (mg/l)
Chlorine				
Chloramine				
Chlorine Dioxide				
Ozone				
Potassium Permanganate				
Other Oxidant				

Specify other oxidant or other location: _____

3. If other chemicals are added, indicate the typical dosage or place a check mark.

Copper Sulfate _____
Lime (Calcium Hydroxide) _____
Sodium Hydroxide _____
Soda Ash _____
Carbon Dioxide _____
Aluminum Sulfate _____
Ferric Chloride _____
Polymers _____
Cationic _____
Anionic _____
Nonionic _____
Powdered Activated Carbon _____
Polyphosphates _____

4. Indicate typical finished water concentrations.

pH _____
Color (units) _____
Turbidity (NTU) _____
Chlorine Residual (mg/l) _____
Total Organic Carbon (mg/l) _____
Odor (TON) _____

Other parameters that may be of interest if measured include:

Total Organic Nitrogen (mg/l) _____
Total Organic Halide (mg/l) _____
Purgeable Organic Halide (mg/l) _____
Kjeldahl Nitrogen (mg/l) _____

E. Meeting Trihalomethanes

1. If you changed your treatment process to meet the present 0.100 mg/l THM standard or a lower level indicate the operating or treatment process. Check the appropriate columns and indicate the total additional capital expenditure and operation and maintenance cost.

	Total THM Level Before Change (μg/l)	Total THM Level After Change (μg/l)
Change Chlorine Application Point	_____	_____
Change Chlorine Dosage	_____	_____
Improve Clarification	_____	_____
Additional Polymers	_____	_____
Chloramines	_____	_____
ph Adjustment	_____	_____
Chlorine Dioxide	_____	_____
Potassium Permanganate	_____	_____
Ozone	_____	_____
Ultraviolet Disinfection	_____	_____
Aeration	_____	_____
Powdered Activated Carbon	_____	_____
Granular Activated Carbon	_____	_____
Filtration	_____	_____
Ultrafiltration	_____	_____
Offline Storage	_____	_____
Alternate Source	_____	_____
Other	_____	_____
Specify Other Treatment: (_____)		
Total Capital Expense: $	_____	_____
Additional Yearly Operation and Maintenance Expense; $/year	_____	_____

2. Please indicate if any of the below noted problems occurred and to what degree.

	Major Problem	Minor Problem	No Problem	No Data
Taste and Odor	1	2	3	4
Corrosion	1	2	3	4
Color	1	2	3	4
Microbiological Quality	1	2	3	4
Biofilm Growth In Distribution System	1	2	3	4

3. If you were required to meet the levels noted below, check the operating procedures and treatment processes that might be considered. Indicate the likely total capital and yearly operating expenditures. If necessary, confer with your treatment consultant prior to answering these questions.

	THM Level		
	50 (μg/l)	20 (μg/l)	5 (μg/l)
Change Chlorine Application Point			
Alternate Pre Disinfectant			
Decrease Chlorine Dosage			
Chloramines			
Chlorine Dioxide			
Potassium Permanganate			
Ozone			
Other			
Alternate Post Disinfectant			
Chloramine			
Chlorine Dioxide			
Ozone			
Ultraviolet			
Other			
Precursor Removal			
pH Adjustment			
Improve Clarification			
Ozone for Microfloculation			
PAC			
Ion Exchanges			
Polymeric Adsorbents			
Ozone for BAC			
Granular Activated Carbon			
Filtration			
Ultrafiltration			
Reverse Osmesis			
Electrokinetic Membrane			
Other			
Other			
Offline Storage			
Alternate Source			
ph Adjustment			
Estimated Capital Cost ($)			
Estimated O & M Cost ($/year)			

4. Please indicate if you anticipate any of the below noted problems and to what degree.

	Major Problem	Minor Problem	No Problem	Unknown
Taste and Odor	1	2	3	4
Corrosion	1	2	3	4
Color	1	2	3	4
Microbiological Quality	1	2	3	4
Biofilm Growth In Distribution System	1	2	3	4

5. What is the basis for your responses to the above question:
   - detailed engineering estimate _____
   - preliminary feasibility study _____
   - pilot plant results _____
   - temporary plant changes _____
   - educated guess _____
   - other _____

6. If you plan on doing pilot plant studies or plant modification, please describe the general nature of such work _____

_____

_____

THANK YOU VERY MUCH FOR HELPING NJDEP GAIN A BETTER UNDERSTANDING OF THE NATURE AND OCCURRENCE OF THMS IN NEW JERSEY.

Appendix E

4. Please indicate if you anticipate any of the below noted problems and to what degree:

	Major Problem	Minor Problem	No Problem	Unknown
Taste and Odor	1	2	3	4
Corrosion	1	2	3	4
Color	1	2	3	4
Microbiological Quality	1	2	3	4
Biofilm Growth In Distribution System	1	2	3	4

5. What is the basis for your responses to the above question:

detailed engineering estimate _____

preliminary feasibility study _____

pilot plant results _____

temporary plant changes _____

educated guess _____

other _____

6. If you plan on doing pilot plant studies or plant modification, please describe the general nature of such work.

_____

_____

_____

THANK YOU VERY MUCH FOR HELPING NJDEP GAIN A BETTER UNDERSTANDING OF THE NATURE AND OCCURRENCE OF [illegible] IN NEW JERSEY.

APPENDIX E

THM ANALYSIS AT FIVE WATER TREATMENT PLANTS - SCHEMATIC FLOW DIAGRAMS AND DATA TABLES

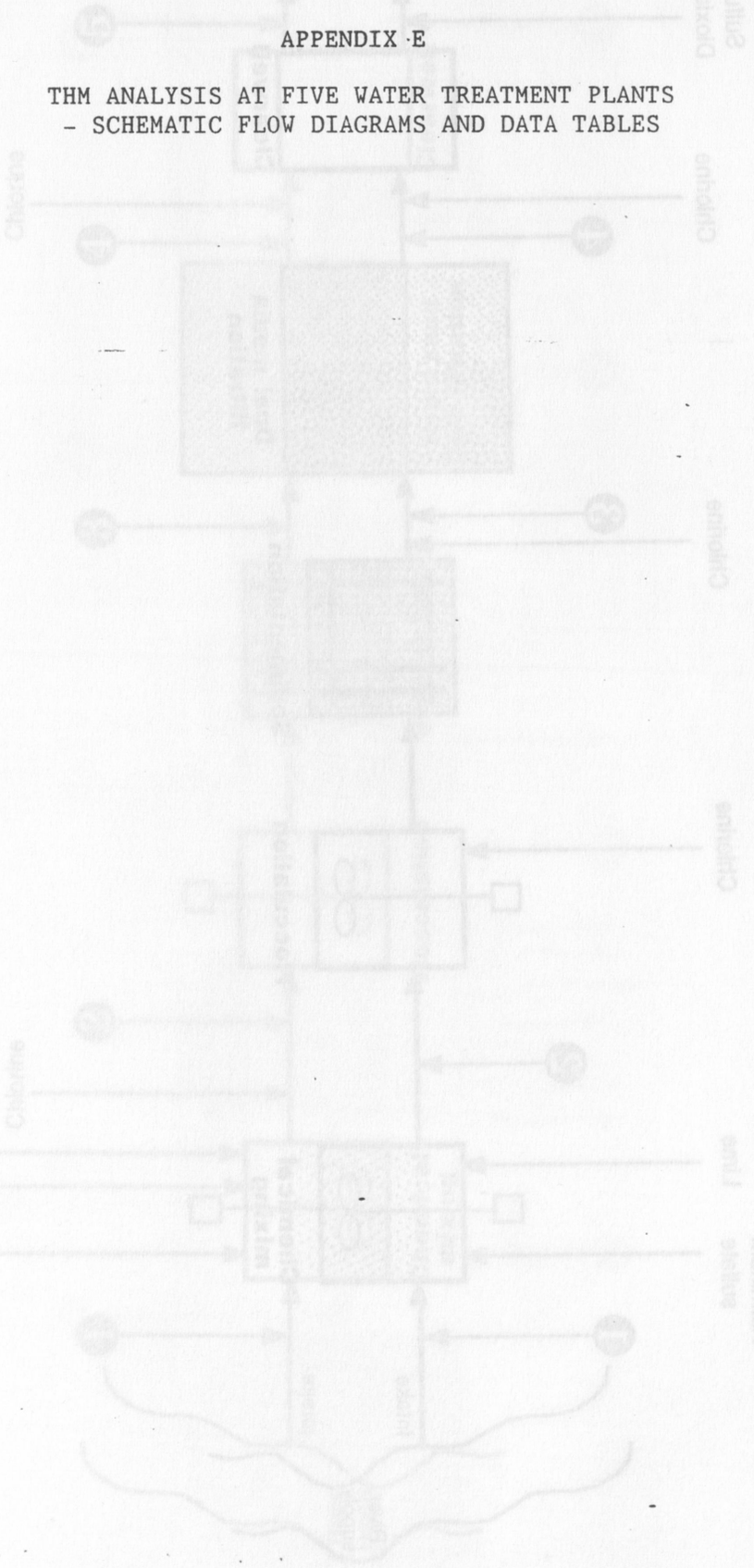

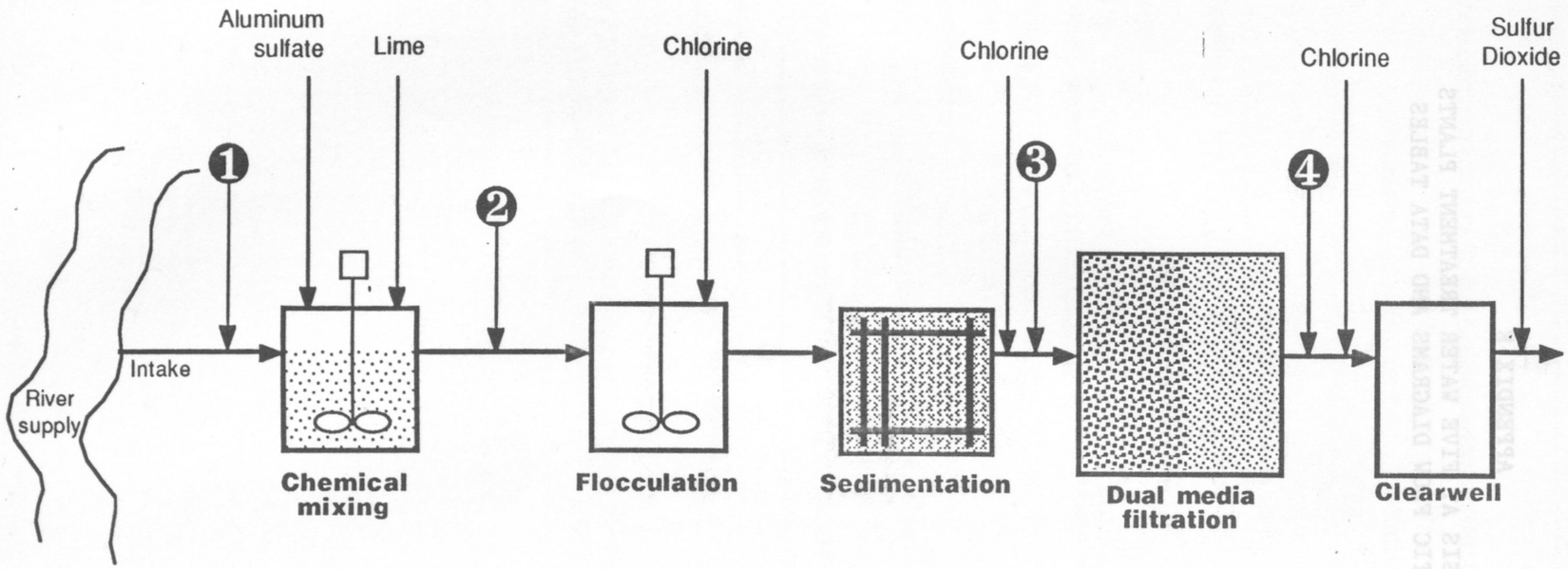

CDM
environmental engineers, scientists, planners & management consultants

Figure E-1

Schematic Flow Diagram - Plant A
Surface Supply

Special Water Treatment Study - Phase II

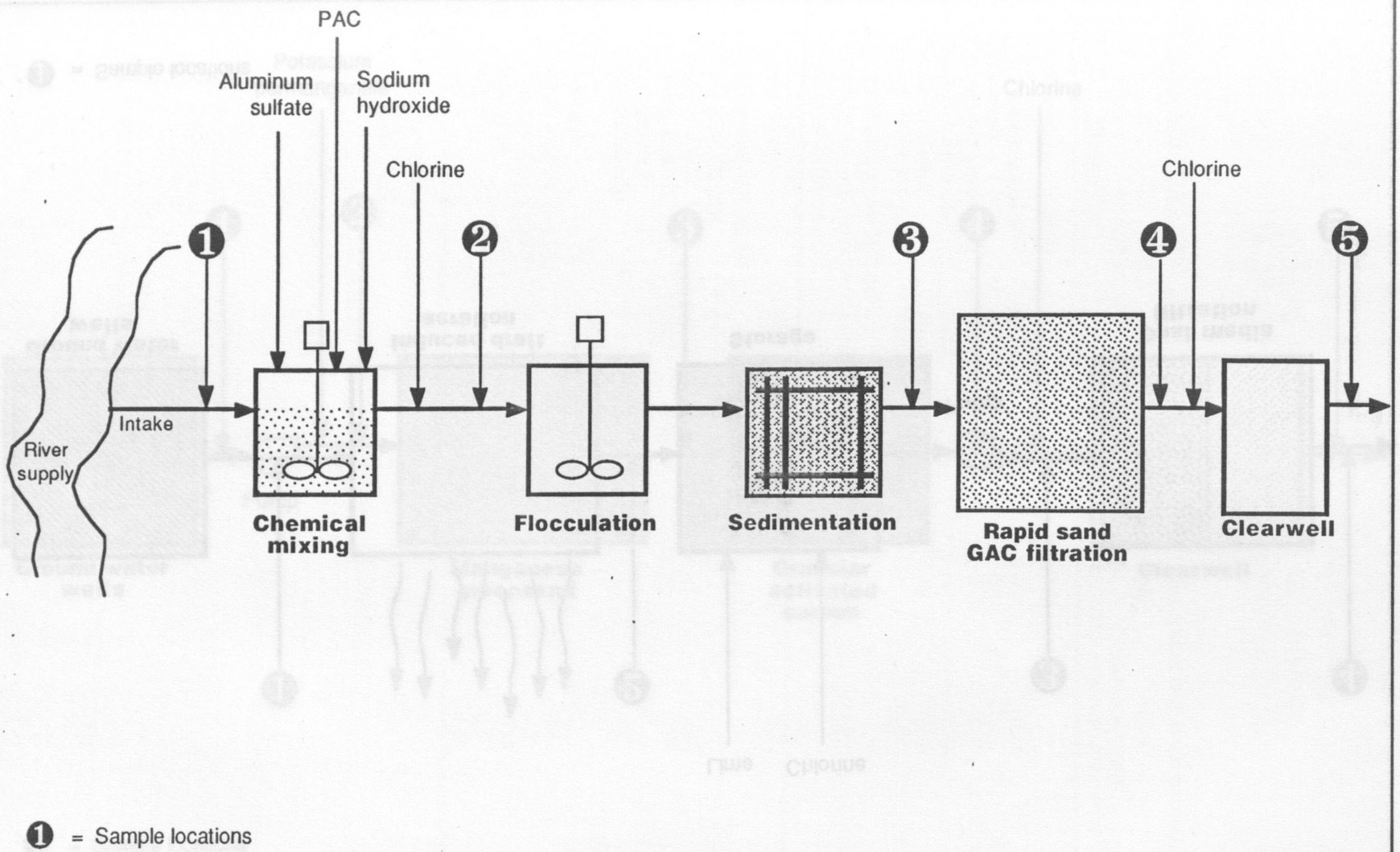

CDM
environmental engineers, scientists, planners & management consultants

Figure E-2
Schematic Flow Diagram - Plant B
Surface Supply
Special Water Treatment Study - Phase II

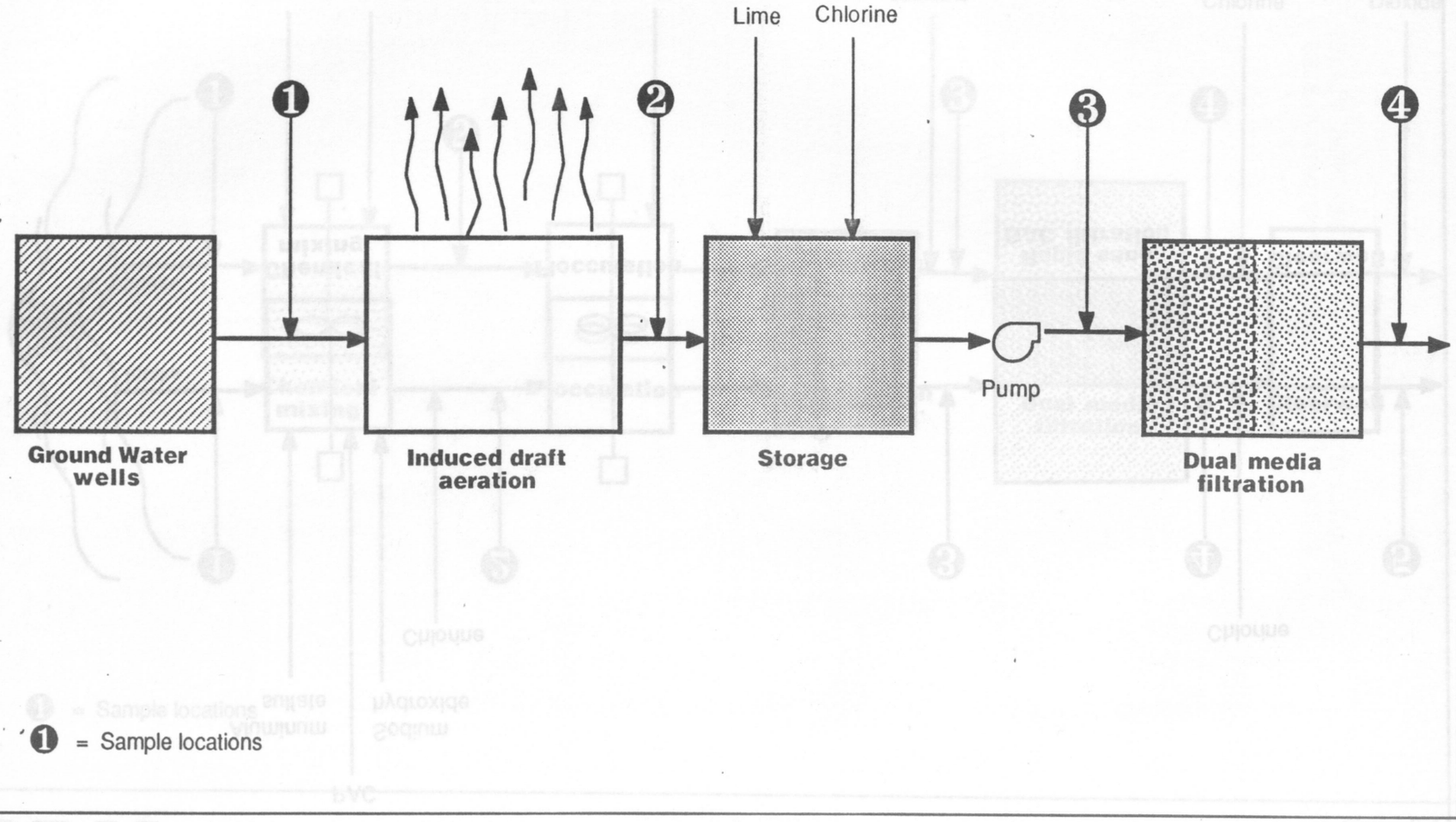

CDM
environmental engineers, scientists, planners & management consultants

Figure E-3
Schematic Flow Diagram - Plant C
Ground Water Supply
Special Water Treatment Study - Phase II

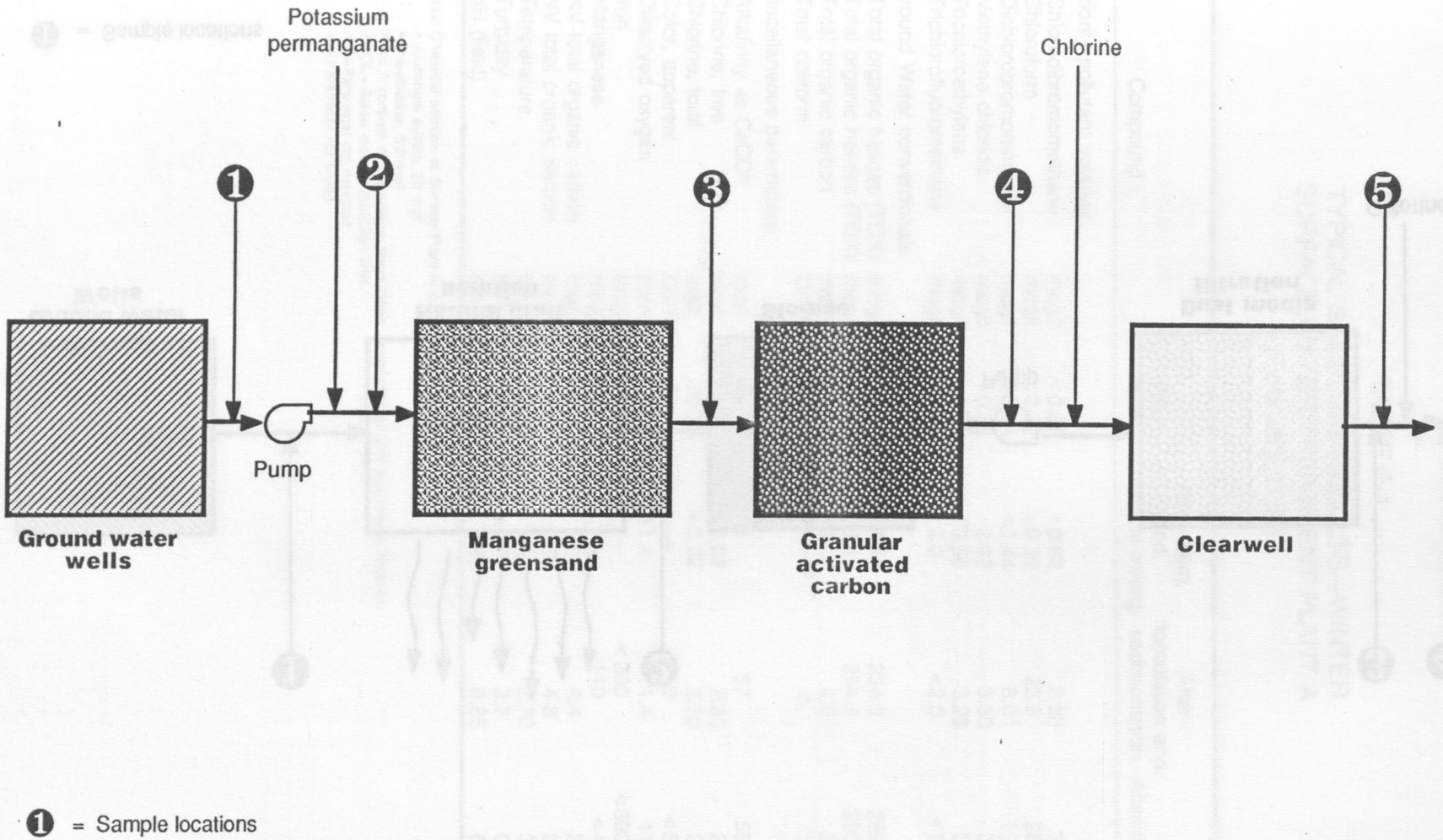

CDM
environmental engineers, scientists, planners & management consultants

Figure E-4
Schematic Flow Diagram - Plant D
Ground Water Supply
Special Water Treatment Study - Phase II

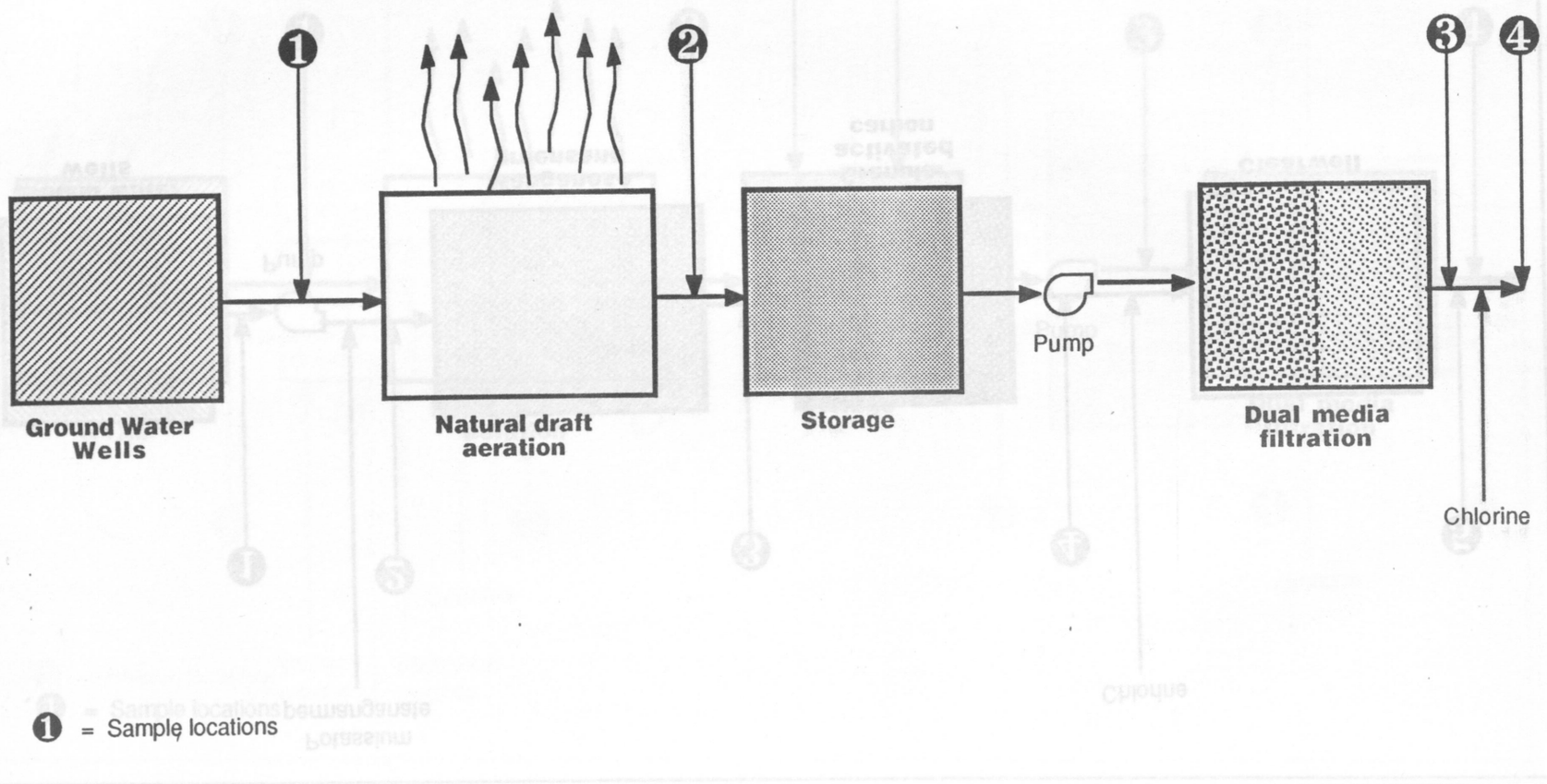

Figure E-5

Schematic Flow Diagram - Plant E
Ground Water Supply

Special Water Treatment Study - Phase II

CDM
environmental engineers, scientists,
planners & management consultants

TABLE E-1

TYPICAL SAMPLING RESULTS—WINTER SURFACE WATER TREATMENT PLANT A (February 1986)

Compound		Raw water	After alum, and chemical mixing	After flocculation and sedimentation	After filtration
Priority pollutant volatiles					
Chlorodibromomethane	mcg/l	< 0.62	< 0.62	2.66	3.21
Chloroform	mcg/l	< 0.32	< 0.32	22.5	28.2
Dichlorobromomethane	mcg/l	< 0.44	< 0.44	8.01	10.1
Methylene chloride	mcg/l	< 0.56	2.92	3.30	3.02
Trichloroethylene	mcg/l	4.80	< 0.38	3.28	3.45
Trichlorofluoromethane	mcg/l	< 2.0	< 2.0	< 2.0	< 2.0
Ground Water conventionals					
Total organic halides (TOX)	mcg/l	31.5	37.4	234.3	282.9
Total organic halides (TOX)	mcg/l	27.9	38.4	264.5	280.2
Total organic carbon	mcg/l	4.4	6	4.6	2.9
Total coliform	C/100	300	—	0	0
Miscellaneous parameters					
Alkalinity as $CaCO^3$	mg/l	76	62	57	55
Chlorine, free	mg/l	< 0.02	< 0.02	2.20	2.00
Chlorine, total	mg/l	< 0.02	< 0.02	2.50	2.50
Color, apparent	Co/Pt	20	—	6	< 5
Dissolved oxygen	ppm	—	11.4	11.4	11.60
Iron	mcg/l	400	—	< 300	< 300
Manganese	mcg/l	120	—	110	< 4
NV total organic carbon	mg/l	4.4	5.9	4.4	2.9
NV total organic carbon	mg/l	4.5	6.1	4.8	2.9
Temperature	deg. C	1.95	2.41	2.72	3.02
Turbidity	NTU	3.9	—	2.7	0.39
pH (field)	std	7.65	7.25	6.85	6.85

Notes: Chemical addition at Surface Plant A during winter sampling
- Aluminum sulfate, 20 mg/l
- Pre-chlorine, 5.0 mg/l

Plant A consists of coagulation flocculation, sedimentation and dual media filtration.
BMDL = Below method detection limit
ND = Parameter not detected
— = Parameter not tested

TABLE E-2

RESULTS OF TOTAL TRIHALOMETHANE FORMATION POTENTIAL TEST—WINTER SURFACE WATER TREATMENT PLANT A

THM	S1 raw water	After alum and chemical mixing	After flocculation and sedimentation	After filtration
Chloroform	264.28	241.70	174.87	143.22
Bromodichloromethane	42.53	39.74	46.35	38.81
Dibromochloromethane	5.78	5.53	11.22	9.07
Bromoform	ND	ND	ND	ND

Notes: The concentrations of THMs shown above do not exist in the raw water, but are a result of adding chlorine to the water and holding it for 5 days at 20°C before analysis. This was done to force the maximum THM formation achievable under laboratory conditions.
ND = Parameter not detected

TABLE E-3

TYPICAL SAMPLING RESULTS—SUMMER SURFACE WATER TREATMENT PLANT A (August 1986)

Compound		Raw water	After alum.	After flocculation and sedimentation	After filtration
Priority pollutant volatiles					
Chlorodibromomethane	mcg/l	ND	ND	10	20
Chloroform	mcg/l	ND	ND	50	50
Dichlorobromomethane	mcg/l	ND	ND	30	40
Methylene chloride	mcg/l	ND	2	3	1
1,2-trans-Dichloroethylene	mcg/l	0.8	ND	ND	ND
1,1,1-Trichloroethane	mcg/l	0.9	ND	ND	BMDL
Trichloroethylene	mcg/l	10	5	2	3
Ground Water conventionals					
Chloride	mg/l	50.4	49.7	57.5	57.9
Total organic halides (TOX)	mcg/l	26	28.6	334.3	259.8
Total organic halides (TOX)	mcg/l	27	27.1	275.3	236.4
Total organic carbon	mg/l	3.6	4.83	3.01	2.93
Total organic carbon	mg/l	3.3	4.98	3.14	2.92
Field parameters					
pH (field)	std	7.20	6.90	6.90	6.90
Temperature	deg. C	19.03	19.23	19.42	19.42
Turbidity	NTU	14	21	2.3	1.1
Miscellaneous parameters					
Alkalinity as $CaCO^3$	mg/l	120	100	—	92
Chlorine, free	mg/l	<0.01	<0.01	2.26	1.37
Chlorine, total	mg/l	0.01	<0.01	2.95	1.69
Color, apparent	Co/Pt	22	—	—	<5
Dissolved oxygen	ppm	6.20	6.20	7.40	7.55
Hardness as $CaCO^3$	mg/l	—	—	—	160
Manganese	mcg/l	—	—	—	5.7
NV total organic carbon	mg/l	3.6	4.83	3.01	2.93
NV total organic carbon	mg/l	3.3	4.98	3.14	2.92
Purgeable organic halides (POX)	mcg/l	96	<50	84	78
Purgeable organic halides (POX)	mcg/l	92	<50	88	82

Notes: Chemical addition at surface plant A during summer sampling
- Aluminum sulfate, 26 mg/l
- Prechlorine, 5.6 mg/l

BMDL = Below method detection limit
ND = Parameter not detected
— = Parameter not tested

TABLE E-4

RESULTS OF TOTAL TRIHALOMETHANE FORMATION POTENTIAL TEST—SUMMER SURFACE WATER TREATMENT PLANT A (August 1986)

Compound	Raw water	After alum.	After flocculation and sedimentation	After filtration
Chloroform	190	160	160	150
Bromodichloromethane	37	36	35	34
Dibromochloromethane	ND	ND	ND	ND
Bromoform	ND	ND	ND	ND

Notes: The concentrations of THMs shown above do not exist in the raw water, but are a result of adding chlorine to the water and holding it for 5 days at 20°C before analysis. This was done to force the maximum THM formation achievable under laboratory conditions.
ND = Parameter not detected

TABLE E-5

TYPICAL SAMPLING RESULTS
SURFACE WATER TREATMENT PLANT A
AFTER STORM EVENT
(November 1986)

Compound		Raw water	After alum.	After flocculation and sedimentation	After filtration
Priority pollutant volatiles					
Chloroform	mcg/l	ND	ND	73.8	66.8
Dichlorobromomethane	mcg/l	ND	ND	7.53	6.08
Methylene chloride	mcg/l	ND	ND	2.53	6.88
1,1,1-Trichloroethane	mcg/l	ND	BMDL	ND	ND
Trichloroethylene	mcg/l	0.956	ND	ND	ND
Ground Water metals					
Iron	mcg/l	3,600	—	—	BMDL
Ground Water conventionals					
Chloride	mg/l	26.5	27.5	34.2	33.6
Total organic halides (TOX)	mcg/l	32	—	—	350
Total organic halides (TOX)	mcg/l	34	—	—	422
Total organic carbon	mg/l	13.8	11.3	6.6	6.2
Total organic carbon	mg/l	12.4	11.5	6.1	5.6
Total coliform	C/100	IND	IND	<1	<1
Field parameters					
pH (field)	std	6.80	6.50	6.40	6.30
Temperature	deg. C	9.04	9.13	9.13	9.04
Turbidity	NTU	28	—	2.8	0.36
Miscellaneous parameters					
Alkalinity as $CaCO^3$	mg/1	21	—	—	9
Chlorine, free	mg/l	< 0.01	< 0.01	2.22	1.53
Chlorine, total	mg/l	< 0.01	< 0.01	2.79	1.90
Chlorophyll a	mg/l	0.352	—	—	< 0.010
Color, appārent	Co/Pt	66	5	< 5	< 5
Dissolved oxygen	ppm	10.2	10.2	10.2	10.4
Hardness as $CaCO^3$	mg/l	57	—	—	53
NV total organic carbon	mg/l	13.8	11.3	6.6	6.2
NV total organic carbon	mg/l	12.4	11.5	6.1	5.6

Notes: BMDL = Below method detection limit
ND = Parameter not detected
— = Parameter not tested

TABLE E-6

TYPICAL SAMPLING RESULTS—WINTER SURFACE WATER TREATMENT PLANT B (February 1986)

Compound		Raw water	After pre-chlorination	After flocculation and sedimentation	After filtration	After post chlorination
Priority pollutant volatiles						
Chlorodibromomethane	mcg/l	< 0.62	< 0.62	< 0.62	< 0.62	< 0.62
Chloroform	mcg/l	< 0.32	6.85	21.2	15.3	32.4
Dichlorobromomethane	mcg/l	< 0.44	< 0.44	2.19	3.94	6.56
Methylene chloride	mcg/l	< 0.56	1.97	1.34	< 0.56	< 0.56
Tetrachloroethylene	mcg/l	1.82	1.71	2.14	1.93	1.79
1,1,1-Trichloroethane	mcg/l	1.07	0.998	1.07	1.02	0.984
Trichloroethylene	mcg/l	1.27	1.26	< 0.38	1.51	< 0.38
Trichlorofluoromethane	mcg/l	< 2.0	< 2.0	< 2.0	< 2.0	< 2.0
Priority pollutant base/neutrals						
Naphthalene	mcg/l	< 1.6	—	—	—	11.6
Ground Water conventionals						
Total organic halides (TOX)	mcg/l	33.4	330.5	290.4	238.7	206.6
Total organic halides (TOX)	mcg/l	35.9	319.9	335.7	201.8	172.2
Total organic carbon	mg/l	5.9	5.2	4.1	3.7	3.1
Total organic carbon	mg/l	5.3	—	—	—	—
Total organic carbon	mg/l	5.6	—	—	—	—
Total coliform	C/100	47,000	—	0	0	—
Miscellaneous parameters						
Alkalinity as $CaCO^3$	mg/l	55	19	19	17	49
Ammonia as N	mg/l	1.1	—	—	—	—
Chlorine, free	mg/l	< 0.01	2.64	2.52	0.90	1.13
Chlorine, total	mg/l	< 0.01	5.47	3.86	1.84	1.58
Chlorophyll a	mg/l	4.27	—	< 1	< 1	—
Color, apparent	Co/Pt	20	—	5	6	—
Dissolved oxygen	ppm	11.2	11.6	11.4	11.9	12.0
Iron	mcg/l	600	—	< 200	< 200	—
Manganese	mcg/l	120	—	110	80	—
NV total organic carbon	mg/l	—	4.8	3.9	3.7	2.9
NV total organic carbon	mg/l	—	5.5	4.2	3.7	3.0
Purgeable organic carbon	mg/l	< 1.0	< 1.0	< 1	< 1	4.0
Temperature	deg. C	2.36	2.26	2.41	2.57	—
Turbidity	NTU	6.2	—	2.9	2.4	—
pH (field)	std	7.25	6.15	6.05	6.05	7.25

Notes: Plant B consist of chemical coagulation, flocculation, sedimentation and rapid sand/GAC filtration. Average chemical usage is 10 mg/l prechlorine, aluminum sulfate 10 mg/l, sodium hydroxide 8 mg/l, post-chlorine 1 mg/l.
BMDL = Below method detection limit
ND = Parameter not detected
"—" = Parameter not tested

TABLE E-7

TYPICAL SAMPLING RESULTS—SUMMER SURFACE WATER TREATMENT PLANT B (August 1986)

Compound		Raw water	After pre-chlorination	After flocculation sedimentation	After filtration	After post chlorination
Priority pollutant volatiles						
Chlorodibromomethane	mcg/l	ND	3	5	5	7
Chloroform	mcg/l	4	100	90	70	100
Dichlorobromomethane	mcg/l	1	20	30	30	40
Dichlorodifluoromethane	mcg/l	4	ND	ND	ND	ND
Methylene chloride	mcg/l	5	0.9	6	5	3
1,1,1-Trichloroethane	mcg/l	3	ND	BMDL	ND	ND
Trichloroethylene	mcg/l	0.5	0.6	ND	BMDL	0.5
Ground Water conventionals						
Chloride	mg/l	47.5	50.3	52.4	51.9	50.6
Total organic halides (TOX)	mcg/l	59.2	454.2	510.6	329.7	290
Total organic halides (TOX)	mcg/l	51.2	467.7	522.1	332.4	412
Total organic carbon	mg/l	5.68	6.09	4.63	3.97	3.51
Total organic carbon	mg/l	5.22	6.89	4.77	4.17	3.75
Total coliform	C/100	18,000	—	—	—	<2
Field parameters						
pH (field)	std	7.20	5.65	6.10	6.10	6.85
Temperature	deg. C	23.05	22.06	22.16	22.16	23.34
Turbidity	NTU	14	19	3.2	0.35	1.0
Miscellaneous parameters						
Alkalinity as $CaCO^3$	mg/l	58	—	—	—	48
Chlorine, free	mg/l	<0.01	2.16	2.42	0.64	1.29
Chlorine, total	mg/l	0.02	3.02	3.10	1.06	1.70
Color, apparent	Co/Pt	18	<5	<5	—	<5
Dissolved oxygen	ppm	5.2	5.8	5.6	6.1	7.0
Iron	mcg/l	1,100	—	—	—	ND
Manganese	mcg/l	130	—	—	13	—
NV total organic carbon	mg/l	5.68	6.09	4.63	3.97	3.51
NV total organic carbon	mg/l	5.22	6.89	4.77	4.17	3.75
Purgeable organic halides (POX)	mcg/l	<50	82.0	112	84	100
Purgeable organic halides (POX)	mcg/l	<50	72.0	108	78	92

Notes: BMDL = Below method detection limit
ND = Parameter not detected
— = Parameter not tested

TABLE E-8

TYPICAL SAMPLING RESULTS
SURFACE WATER TREATMENT PLANT B
AFTER STORM EVENT
(December 1986)

Compound		Raw water	After pre-chlorination	After flocculation sedimentation	After filtration	After post chlorination
Priority pollutant volatiles						
Chlorodibromomethane	mcg/l	< 0.62	< 0.62	< 0.62	< 0.62	1.16
Chloroform	mcg/l	< 0.32	77.1	34.6	37.5	91.6
Dichlorobromomethane	mcg/l	< 0.44	9.96	6.36	6.13	11.9
1,1-Dichloroethane	mcg/l	3.10	< 0.94	< 0.94	< 0.94	< 0.94
Methylene chloride	mcg/l	< 0.56	6.54	6.36	9.09	16.4
Tetrachloroethylene	mcg/l	< 0.82	1.46	< 0.82	< 0.82	1.07
Toluene	mcg/l	< 1.2	< 1.2	< 1.2	< 1.2	< 1.2
1,1,1-Trichloroethane	mcg/l	< 0.76	4.15	< 0.76	< 0.76	2.47
Ground Water metals						
Iron	mcg/l	1,700	—	—	—	—
Ground Water conventionals						
Chloride	mg/l	22.4	29.8	26.1	26.5	27.3
Total organic halides (TOX)	mcg/l	27	433	—	—	284
Total organic halides (TOX)	mcg/l	26	439	—	—	290
Total coliform	C/100	10,000	—	—	—	—
Field parameters						
pH (field)	std	7.00	5.90	5.40	5.80	8.50
Temperature	deg. C	7.36	7.26	7.16	7.36	9.13
Turbidity	NTU	32	—	5.2	0.68	—
Miscellaneous parameters						
Alkalinity as $CaCO^3$	mg/l	31	—	—	—	35
Chlorine, free	mg/l	< 0.01	3.25	1.40	0.61	0.63
Chlorine, total	mg/l	< 0.01	5.04	2.76	1.10	0.81
Chlorophyll a	mg/l	0.269	—	—	—	< 0.010
Color, apparent	Co/Pt	45	—	—	—	—
Dissolved oxygen	ppm	8.35	8.50	8.80	9.30	8.50
Hardness as $CaCO^3$	mg/l	54	—	—	—	48
NV total organic carbon	mg/l	5.77	5.57	3.58	2.68	3.32
NV total organic carbon	mg/l	6.02	6.15	3.57	2.78	3.03

Notes: BMDL = Below method detection limit
ND = Parameter not detected
— = Parameter not tested

TABLE E-9

RESULTS OF TOTAL TRIHALOMETHANE FORMATION POTENTIAL TEST
SURFACE WATER TREATMENT PLANT B
(February 1986)

THM	Raw water	After pre-chlorination	After flocculation/ sedimentation	After filtration	After post chlorination
Chloroform	269.23	286.52	174.74	182.99	166.66
Bromodichloromethane	34.96	45.04	31.33	28.90	32.56
Dibromochloromethane	5.20	5.10	4.62	4.17	5.00
Bromoform	ND	ND	ND	ND	ND

Notes: The concentrations of THMs shown above do not exist in the raw water, but are a result of adding chlorine to the water and holding it for 5 days at 20°C before analysis. This was done to force the maximum THM formation achievable under laboratory conditions.
BMDL = Below method detection limit
ND = Parameter not detected
— = Parameter not tested

TABLE E-10

RESULTS OF TOTAL TRIHALOMETHANE FORMATION POTENTIAL TEST
SURFACE WATER TREATMENT PLANT B
(August 1986)

THM	Raw water	After pre-chlorination	After flocculation/ sedimentation	After filtration	After post chlorination
Chloroform	590	330	220	190	210
Bromodichloromethane	46	43	36	42	41
Dibromochloromethane	ND	ND	ND	ND	ND
Bromoform	ND	ND	ND	ND	ND

Notes: The concentrations of THMs shown above do not exist in the raw water, but are a result of adding chlorine to the water and holding it for 5 days at 20°C before analysis. This was done to force the maximum THM formation achievable under laboratory conditions.
BMDL = Below method detection limit
ND = Parameter not detected
— = Parameter not tested

TABLE E-11

TYPICAL SAMPLING RESULTS—WINTER
GROUND WATER TREATMENT PLANT C
(January 1986)

Compound		Raw water	After aeration	After lime and chlorine	After filtration
Priority pollutant volatiles					
Chlorobenzene	mcg/l	2.03	2.06	<1.2	<1.2
Chloroform	mcg/l	1.76	1.95	0.710	1.25
1,1-Dichloroethane	mcg/l	3.16	3.46	1.53	1.67
1,2-Dichloroethane	mcg/l	14.7	17.0	9.81	9.86
1,1-Dichloroethylene	mcg/l	2.63	1.72	0.601	0.733
Methylene chloride	mcg/l	4.19	9.55	2.90	0.892
Tetrachloroethylene	mcg/l	4.19	6.38	6.32	7.53
1,2-trans-Dichloroethylene	mcg/l	7.09	7.95	4.16	4.44
1,1,1-Trichloroethane	mcg/l	0.858	<0.76	<0.76	<0.76
1,1,2-Trichloroethane	mcg/l	<1.0	<1.0	<1.0	<1.0
Trichloroethylene	mcg/l	49.5	43.1	24.2	25.5
Ground Water conventionals					
Total organic halides (TOX)	mcg/l	68	78.7	46.2	70.5
Total organic halides (TOX)	mcg/l	72.6	76.0	48.1	64.9
Field parameters					
pH (field)	std	5.95	6.55	7.45	5.95
Temperature	deg. C	13.44	12.73	14.11	14.79
Turbidity	NTU	3.6	5.1	1.0	0.43
Miscellaneous parameters					
Alkalinity as $CaCO^3$	mg/l	48	73	74	77
Chlorine, free	mg/l	<0.02	<0.02	0.15	0.45
Chlorine, total	mg/l	<0.02	<0.02	0.55	0.55
Color, apparent	Co/Pt	<5	14	<5	<5
Dissolved oxygen	mg/l	3.8	8.9	9.4	9.5
Hardness as $CaCO^3$	mg/l	130	130	150	160
Iron	mcg/l	1,000	900	900	400
Manganese	mcg/l	290	396	280	388
NV total organic carbon	mg/l	1.8	3.1	1.9	1.8
Total dissolved solids (TDS)	mg/l	280	330	310	300

Notes: Plant process consists of induced draft aeration, chlorination and lime addition followed by dual media horizontal pressure filtration.
Average chlorine dosage 0.9 mg/l; average lime dosage 16 mg/l.
BMDL = Below method detection limit
ND = Parameter not detected
— = Parameter not tested

TABLE E-12

TYPICAL SAMPLING RESULTS—SUMMER
GROUNDWATER TREATMENT PLANT C
(August—September 1986)

Compound		Raw water	After aeration	After lime and chlorine	After filtration
Priority pollutant volatiles					
1,1-Dichloroethane	mcg/l	2	ND	ND	1
1,2-Dichloroethane	mcg/l	8	6	7	7
1,1-Dichloroethylene	mcg/l	2	BMDL	0.6	ND
Methylene chloride	mcg/l	30	2	ND	ND
Tetrachloroethylene	mcg/l	10	3	5	5
1,2-trans-Dichloroethylene	mcg/l	7	4	5	4
Trichloroethylene	mcg/l	40	20	20	20
Ground Water conventionals					
Chloride	mg/l	45.7	44.9	46.7	46.2
Total organic halides (TOX)	mcg/l	50.4	113.9	115.1	113.9
Total organic halides (TOX)	mcg/l	48.0	110.6	123.9	110.4
Total organic carbon	mg/l	3.51	1.50	1.67	1.51
Total organic carbon	mg/l	3.50	1.42	1.72	1.73
Field parameters					
pH (field)	std	5.70	6.55	8.85	7.40
Temperature	deg. C	15.10	14.62	15.20	15.20
Turbidity	NTU	2.7	—	—	1.4
Miscellaneous parameters					
Alkalinity as $CaCO^3$	mg/l	54	44	82	66
Chlorine, free	mg/l	< 0.01	< 0.01	0.19	0.26
Chlorine, total	mg/l	< 0.01	< 0.01	0.57	0.52
Dissolved oxygen	ppm	2.45	7.90	8.70	8.70
Hardness as $CaCO^3$	mg/l	—	130	—	150
Iron	mcg/l	1,500	1,300	1,400	BMDL
Manganese	mcg/l	320	260	290	60
NV total organic carbon	mg/l	3.51	1.50	1.67	1.51
NV total organic carbon	mg/l	3.50	1.42	1.72	1.73
Purgeable organic halides (POX)	mcg/l	78	36	74	54
Purgeable organic halides (POX)	mcg/l	70	24	62	52
Total dissolved solids (TDS)	mg/l	—	240	—	320

Notes: BMDL = Below method detection limit
ND = Parameter not detected
— = Parameter not tested

TABLE E-13
TYPICAL SAMPLING RESULTS—WINTER
GROUND WATER TREATMENT PLANT D
(January 1986)

Compound		Raw water	After potassium permanganate	After greensand filtration	After GAC	After post-chlorination
Priority pollutant volatiles						
Chlorobenzene	mcg/l	1.80	1.92	< 1.2	< 1.2	< 1.2
1,1-Dichloroethylene	mcg/l	< 0.56	< 0.56	< 0.56	< 0.56	< 0.56
Tetrachloroethylene	mcg/l	14.5	14.9	15.5	14.7	10.5
1,2-trans-Dichloroethylene	mcg/l	1.62	1.65	1.54	1.47	1.03
1,1,1-Trichloroethane	mcg/l	6.69	6.98	6.88	7.03	7.53
Trichloroethylene	mcg/l	47.0	45.7	45.9	48.9	23.8
Priority pollutant base/neutrals						
Nitrobenzene	mcg/l	< 3.8	—	—	—	15.7
Ground Water conventionals						
Total organic halides (TOX)	mcg/l	39.0	61.6	16.8	68.2	41.8
Total organic halides (TOX)	mcg/l	40.3	54.5	14.5	61.5	41.7
Miscellaneous parameters						
Alkalinity as $CaCO^3$	mg/l	190	200	190	190	150
Chlorine, free	mcg/l	< 0.02	0.10	< 0.02	< 0.02	0.06
Chlorine, total	mcg/l	< 0.02	0.90	< 0.02	< 0.02	0.30
Color, apparent	Co/Pt	< 5	19	5	5	—
Dissolved oxygen	ppm	2.9	3.3	1.2	1.2	5.0
Hardness as $CaCO^3$	mg/l	270	260	270	260	210
Iron	mcg/l	200	200	< 200	< 200	—
Manganese	mcg/l	441	757	347	360	—
NV total organic carbon (TOC)	mg/l	3.7	4.3	4.1	3.6	—
Temperature	deg.C	14.85	14.85	14.90	14.96	14.40
Total dissolved solids (TDS)	mg/l	410	400	410	400	—
Turbidity	NTU	0.44	12	0.31	0.28	—
pH (field)	std	7.20	7.15	7.15	7.10	7.10

Notes: Plant process consists of preoxidation with potassium permanganate, greensand pressure filtration, granular activated carbon adsorption and post chlorination. Typical chemical dosages are chlorine, 1.2 mg/l and potassium permanganate, 0.5 mg/l.
BMDL = Below method detection limit
ND = Parameter not detected
— = Parameter not tested

TABLE E-14

TYPICAL SAMPLING RESULTS—SUMMER
GROUNDWATER TREATMENT PLANT D
(August—September 1986)

Compound		Raw water	After potassium permanganate	After greensand filtration	After GAC	After post-chlorination
Priority pollutant volatiles						
Methylene chloride	mcg/l	2	0.6	8	4	ND
Tetrachloroethylene	mcg/l	20	10	10	10	10
1,2-trans-Dichloroethylene	mcg/l	ND	1	ND	ND	ND
1,1,1-Trichloroethane	mcg/l	6	7	5	6	5
Trichloroethylene	mcg/l	40	40	30	40	20
Ground Water conventionals						
Chloride	mg/l	75.8	76.5	75.6	76.0	54.8
Total organic halides (TOX)	mcg/l	88.6	50.8	42.1	60.7	66.8
Total organic halides (TOX)	mcg/l	64.8	52.6	35.9	59.0	65.8
Total organic carbon	mg/l	3.31	2.97	3.63	3.52	1.72
Total organic carbon	mg/l	3.31	2.99	3.42	3.50	1.75
Field parameters						
pH (field)	std	7.00	7.00	7.00	7.00	7.00
Temperature	deg. C	14.71	14.81	15.01	15.01	14.62
Turbidity	NTU	1.3	0.95	1.1	—	0.6
Miscellaneous parameters						
Alkalinity as $CaCO^3$	mg/l	200	200	200	170	140
Chlorine, free	mg/l	< 0.01	< 0.01	< 0.01	< 0.01	0.28
Chlorine, total	mg/l	< 0.01	< 0.01	< 0.01	< 0.01	0.71
Color, apparent	Co/Pt	—	—	—	—	< 5
Dissolved oxygen	ppm	2.80	1.40	1.55	1.90	6.15
Hardness as $CaCO^3$	mg/l	—	250	—	260	—
Manganese	mcg/l	402	635	190	—	71
NV total organic carbon	mg/l	3.31	2.97	3.63	3.52	1.72
NV total organic carbon	mg/l	3.31	2.99	3.42	3.50	1.75
Purgeable organic halides (POX)	mcg/l	< 50.0	< 50.0	< 50	< 50	< 50.0
Purgeable organic halides (POX)	mcg/l	< 50.0	< 50.0	< 50	< 50	< 50.0
Total dissolved solids (TDS)	mg/l	—	—	—	—	340

Notes: Plant process consists of preoxidation with potassium permanganate, greensand pressure filtration, granular activated carbon adsorption and post chlorination. Typical chemical dosages are chlorine, 1.2 mg/l and potassium permanganate, 0.5 mg/l.
BMDL = Below method detection limit
ND = Parameter not detected
— = Parameter not tested

TABLE E-15

TYPICAL SAMPLING RESULTS—WINTER
GROUNDWATER TREATMENT PLANT E
(January 1986)

Compound		Raw water	After aeration	After filtration	After chlorination
Priority pollutant volatiles					
Methylene chloride	mcg/l	< 0.56	1.29	2.25	< 0.56
Tetrachloroethylene	mcg/l	< 0.82	3.41	< 0.82	< 0.82
1,2-trans-Dichloroethylene	mcg/l	1.96	< 0.32	< 0.32	0.382
Trichloroethylene	mcg/l	64.9	23.1	3.89	7.17
Ground Water conventionals					
Total organic halides (TOX)	mcg/l	38.8	12.8	15.6	25.5
Total organic halides (TOX)	mcg/l	37.0	11.2	15.7	26.6
Total coliform	C/100	—	0	0	—
Miscellaneous parameters					
Alkalinity as $CaCO^3$	mg/l	8	< 5	5	7
Chlorine, free	mg/l	< 0.02	< 0.02	< 0.02	0.04
Chlorine, total	mg/l	< 0.02	< 0.02	< 0.02	0.10
Color, apparent	Co/Pt	< 5	< 5	< 5	—
Dissolved oxygen	ppm	4.7	9.4	9.8	9.8
Hardness as $CaCO^3$	mg/l	31	21	23	31
Iron	mcg/l	400	400	< 300	—
Manganese	mcg/l	95	99	94	—
NV total organic carbon	mg/l	1.6	< 1.0	1.6	—
Temperature	deg. C	13.28	12.59	13.90	10.86
Total dissolved solids (TDS)	mg/l	64	52	68	—
Turbidity	NTU	1.3	1.0	0.50	—
pH (field)	std	5.55	5.95	6.20	6.35

Notes: Plant Process consists of natural draft tray aeration followed by pressure sand filtration and post chlorination.
BMDL = Below method detection limit
ND = Parameter not detected
— = Parameter not tested

TABLE E-14

TYPICAL SAMPLING RESULTS—SUMMER

GROUND WATER TREATMENT PLANT E

(January 1986)

Compound	Raw water	After potassium permanganate	After greensand filtration	After GAC	After post-chlorination
Priority pollutant volatiles					
Methylene chloride	2	0.6	8	8	ND
Tetrachloroethylene	20	10	10	10	15
1,2-trans-Dichloroethylene	ND	1	ND	ND	ND
1,1,1-Trichloroethane	6	7	5	5	4
Trichloroethylene	40	40	30	40	20
Ground Water conventionals					
Chloride	75.8	76.5	75.6	75.0	64.8
Total organic halides (TOX)	88.6	50.8	42.1	60.1	66.6
Total organic halides (TOX)	64.8	52.6	35.9	50.0	65.8
Total organic carbon	3.31	2.97	3.63	3.52	1.72
Total organic carbon	3.31	2.99	3.42	3.00	1.75
Field parameters					
pH (field)	7.00	7.00	7.00	7.00	7.00
Temperature	14.71	14.81	15.01	15.01	16.62
Turbidity	1.3	0.95	1.1	1.1	0.6
Miscellaneous parameters					
Alkalinity as CaCO3	400	200	200	170	160
Chlorine, free	<0.01	<0.01	<0.01	<0.01	0.28
Chlorine, total	<0.01	<0.01	<0.01	<0.01	1.71
Color, apparent	64	—	—	—	—
Dissolved oxygen	2.80	1.40	1.55	1.90	0.15
Hardness as CaCO3	250	250	—	250	—
Manganese	1.3	1.3	1.3	1.3	1.3
NV total organic carbon	3.31	2.97	3.63	3.52	1.72
NV total organic carbon	3.31	2.99	3.42	3.00	1.75
Purgeable organic halides (POX)	<50.0	<50.0	<50	<50	<50.0
Purgeable organic halides (POX)	<50.0	<50.0	<50	<50	<50.0
Total dissolved solids (TDS)	—	—	—	—	340

Notes: Plant process consists of preoxidation with potassium permanganate, greensand pressure filtration, granular activated carbon adsorption and post chlorination. Typical chemical dosages are chlorine, 1.2 mg/l and potassium permanganate, 0.5 mg/l.
BMDL = Below method detection limit
ND = Parameter not detected
— = Parameter not tested

Appendix F

APPENDIX F

A-280 - NEW JERSEY SAFE DRINKING WATER ACT AMENDMENTS

[SECOND SENATE REPRINT]
ASSEMBLY COMMITTEE SUBSTITUTE FOR

ASSEMBLY, No. 280

STATE OF NEW JERSEY

ADOPTED JULY 1, 1982

AN ACT *[to amend and supplement the "Safe Drinking Water Act," approved September 17, 1977 (P. L. 1977, c. 224, C. 58:12A-1 et seq.)]* **concerning the periodic testing of public water supplies, establishing penalties for noncompliance, amending P. L. 1940, c. 5 and amending and supplementing P. L. 1977, c. 224 (C. 58:12A-1 et seq.),** and making an appropriation.

BE IT ENACTED *by the Senate and General Assembly of the State of New Jersey:*

1. (New section) The owner or operator of each public **community** water system shall undertake the periodic testing of the water provided to customers by the system in order to determine the presence of hazardous contaminants, as identified pursuant to section 2 of this amendatory and supplementary act. **A schedule for the periodic testing shall be established by the commissioner within six months of the effective date of this amendatory and supplementary act and pursuant to the "Administrative Procedure Act," P. L. 1968, c. 410 (C. 52:14B-1 et seq.).** The tests shall be conducted during periods of *[peak]* **representative** demand by a laboratory certified by the department. The initial tests for the substances identified in subsection a. of section 2 of this amendatory and supplementary act shall be administered within *[six]* **12** months of the effective date of this amendatory and supplementary act and *[semiannually]* ***semiannually*** thereafter **pursuant to the schedule established by the commissioner**, unless the commissioner shall determine, on a case-by-case basis, that greater **or lesser** frequency of testing is necessary or sufficient to ensure the public health and safety. The tests for the substances for which maximum contaminant levels will be established

EXPLANATION—Matter enclosed in bold-faced brackets [thus] in the above bill is not enacted and is intended to be omitted in the law.
Matter printed in italics *thus* is new matter.
Matter enclosed in asterisks or stars has been adopted as follows:
***—Senate committee amendments adopted January 20, 1983.**
****—Senate amendments adopted March 7, 1983.**

pursuant to subsection b. of section 2 of this amendatory and supplementary act shall be conducted within one year of the effective date of this act and annually thereafter, unless the commissioner shall determine, on a case-by-case basis, that greater *or lesser* frequency of testing is necessary to ensure the public health and safety.

2. (New section) a. The commissioner, after considering the recommendations of the Drinking Water Quality Institute created pursuant to section 10 of this amendatory and supplementary act, shall, within 18 months of the effective date of this amendatory and supplementary act and pursuant to the "Administrative Procedure Act," P. L. 1968, c. 410 (C. 52:14B–1 et seq.), adopt rules and regulations which establish a maximum contaminant level for each of the following organic compounds;

Trichlorothylene
Tetrachlorethylene
Carbon Tetrachloride
1,1,1, Trichloroethane
1,2 Dichloroethane
Vinyl Chloride
Methylene Chloride
Benzene
Chlorobenzene
Dichlorobenzene (s)
Trichlorobenzene (s)
1,1—dichloroethylene
[cris] *cis*—1,2-dichloroethylene
[tans] *trans*—1,2-dichloroethylene
polychlorinated biphyenyls (PCBs)
23A *xylenes
23B *ethylene glycol*
23C *chlordane*
23D *kerosene*
23E *formaldehyde*
23F *n-hexane*
23G *methyl ethyl ketone**

b. The commissioner, after considering the recommendations of the Drinking Water Quality Institute, shall, within two years of the effective date of this amendatory and supplementary act and pursuant to the "Administrative Procedure Act," P. L. 1968, c. 410 (C. 52:14B1 et seq.), adopt rules and regulations which develop, within the limits of medical, scientific, and technological feasibility, a list of those pesticides and related compounds, metals, and base/neutral

extractable organic compounds and acid extractable organic compounds •*which he believes may be found in drinking water and*• the presence of which above maximum contaminants levels in drinking water, upon ingestion or assimilation, •[will]• •*may*•, on the basis of the best information available to the commissioner, cause death, disease, behavorial abnormalities, cancer, genetic mutations, physiological malfunction (including malfunctions in reproduction), or physical deformity; and establish, within the limits of medical scientific and technological feasibility, maximum contaminant levels for each chemical or chemical compund on the list which, with respect to carcinogens, permit cancer in no more than one in one million persons ingesting that chemical for a lifetime, and, with respect to other chemicals or chemical compounds on the list •*and those carcinogens resulting from compounds with public health benefits*•, eliminate within the limits of practicability and feasibility all adverse physiological effects which may result from ingestion: provided, however, that in no case shall the standard adopted by the commissioner for any chemical or chemical compound on the list, be less stringent than that established for the same chemical or chemical compound by the United States Environmental Protection Agency pursuant to the "Safe Drinking Water Act," Pub. L. 93-523 (42 U. S. C. §§ 300f et seq.), or any other federal agency.

No maximum contaminant level need be established for any substance identified pursuant to subsection a. or b. of this section until the presence of the substance in drinking water is established by any test required by this act.

3. (New section) •[Every certified laboratory conducting a potability test required by this amendatory and supplementary act, and the]• •*The*• water purveyor whose water was submitted for •[the]• •*a potability*• test •*required by this amendatory and supplementary act*•, shall forward to the department a copy of all test results. •*The certified laboratory conducting the potability test may, upon written approval by the department, submit the test results on behalf of the water purveyor.*• The department is authorized to conduct spot checks to assure compliance with this amendatory and supplementary act and the accuracy and integrity of the reported results.

4. (New section) a. The owner or operator of each public •*community*• water system which has been determined to contain a chemical or chemical compound identified pursuant to section 2 of this amendatory and supplementary act at a level exceeding the maximum contaminant level shall, within a year •*after receipt*• of the test result, take any action required to bring the water into •[full]• compliance with the standard; provided, however, that the

commissioner may require compliance as promptly as necessary to abate an immediate public health threat, or extend the period of compliance if new construction is required therefor; provided, further however, that the extension shall be granted only upon a determination by the commissioner, after a public hearing, that the extension will not pose an imminent threat to public health.

b. In the event that the owner or operator of a public water system fails to bring the water supplied to consumers into compliance pursuant to subsection a. of this section, the commissioner •[shall]• •*may*• enjoin the water purveyor from continuing to supply water to the public, and establish, in conjunction with the local board of health or county health department, or other appropriate agency a program to bring the water supply into compliance or provide an alternate potable water supply for the customers of the system.

5. (New section) •[a.]• Local health departments, in cooperation with the department, shall develop •*voluntary*• procedures •*for the testing of water*• for homeowners whose principal source of potable water is a well •*to be paid by the homeowner*•, or who are served by a •*nonpublic*• water system •[with fewer than 15 service connections or fewer than 25 customers, to have their water tested semi-annually]• •*or a public water system which is not a public community water system to be paid for by the owner or operator thereof*•.

•[b. Every owner or operator of a nonpublic water system shall, at least annually, notify the customers of that system that the water supplied is not tested for contamination by hazardous pollutants which may have adverse health effects, and informing them of the availability of the program established by the department or their local unit of government to provide this testing.]•

6. (New section) •[The]• •*Within 90 days of the effective date of this amendatory and supplementary act, the*• Board of Public Utilities shall issue appropriate orders increasing current tariffs established pursuant to law for the supplying of water service by an amount equal to the total increase in the relevant water supply service costs resulting from the testing of water required by the provisions of this amendatory and supplementary act and the tax levied pursuant to section 11 of this amendatory and supplementary act. In issuing this order, the board shall not be bound to find a rate base under the provisions of section 31 of P. L. 1962, c. 198 (C. 48:2-21.2).

7. (New section) Any additional expenditures for the testing of water supplies pursuant to P. L. ...., c. ... (C. .....) (now pending before the Legislature as Assembly Committee Substitute

for Assembly Bill 280, of 1982) made by any county or municipality shall, for the purpose of P. L. 1976, c. 68 (C. 40A:4-45.1 et seq.), be considered an expenditure mandated by State law.

8. (New section) When the department orders a municipality, county, or agency thereof which operates a public water supply system to install treatment techniques *or other apparatus or equipment* for the purpose of achieving a maximum contaminant level established by the department, the Division of Local Government Services in the Department of Community Affairs shall, when reviewing the annual budget of the municipality, county or agency thereof, certify that an amount sufficient to cover the cost of the treatment technique specified in the order issued to the municipality, county, or agency thereof is included in the annual budget.

9. (New section) The commissioner shall make an annual report to the Legislature and the Governor and to the Chairmen of the Senate Energy and Environment Committee and General Assembly Agriculture and Environment Committee, or their successors, which shall summarize and analyze the results and effects of the testing program mandated by this amendatory and supplementary act, and make any recommendations concerning the "Safe Drinking Water Act" deemed appropriate. This report shall be due on October 1, 1984 and annually thereafter.

10. (New section) a. There is established in the department the Drinking Water Quality Institute. The institute shall comprise *[13]* *15* members as follows: The Commissioner of Environmental Protection, the Commissioner of Health, and the Chairman of the Water Supply Advisory Council *the Director of the Division of Water Resources in the department, the Director of the **[Division of Cancer and Toxic Substances]** **Office of Science and** Research in the department and the Director of the Office of Occupational and Environmental Health in the Department of Health,* all of whom shall serve ex officio; and *[ten]* *nine* appointed members, *[one]* *three* of whom shall represent the *[major]* water purveyors *[to be appointed by the Governor, and]* *at least one of which has as its primary water source an underground source;* three of whom shall represent the *academic* scientific community, *[three of whom shall represent the academic community]*, and three of whom*, having backgrounds in environmental health issues* shall represent the *[medical profession]* *public*, *with* one of each *group of three set forth hereinbefore* to be appointed by the Governor, the Presendent of the Senate and the Speaker of the General Assembly. Of the members first appointed, *[four]* *three* shall serve for terms of three years,

three for terms of two years and three for terms of one year. Thereafter, all terms shall be for three years. Each member shall serve for the term of his appointment and until his successors shall have been appointed and qualified. Any vacancy shall be filled in the same manner as the original appointment for the unexpired term only. Any member of the institute may be removed by the appointing authority, for cause, after public hearing.

b. Members of the institute shall serve without compensation, but the institute may, within the limits of funds appropriated or otherwise made available to it for such purposes, reimburse its members for necessary expenses incurred in the discharge of their official duties.

c. The institute shall meet at such times and places as may be determined by its chairman, who shall be designated by the Governor. A majority of the membership of the institute shall constitute a quorum for the transaction of business. Action may be taken and motions and resolutions adopted by the institute at any meeting by the affirmative vote of a majority of the full membership of the institute.

d. The institute shall make recommendations for the implementation of the Drinking Water Quality Program by the department. These recommendations shall consist of:

(1) The development of a list of contaminants for which testing shall be required;

(2) The development of maximum contaminant levels;

•*(3) The development of appropriate testing techniques to measure maximum contaminant levels*;

(4) The development of testing frequencies;•

•[(3)]• •*(5)*• The review of all activities undertaken pursuant to the "Safe Drinking Water Act" and any amendments or supplements thereto.

•*e. The Drinking Water Quality Institute shall have the authority to call to its assistance and avail itself of the services of the employees of any State, county or municipal department, board, commission or agency that may be required and made available for such purposes.*•

11. (New section) a. There is levied upon the owner or operator of every public •*community*• water system a water tax of •[$0.0025]• •*$0.01*• per 1,000 gallons of water delivered to a consumer •*not including water purchased for resale*• on or after •[January 1, 1983]• •*first day of the first full fiscal quarter following enactment of this amendatory and supplementary act, and quarterly thereafter*•.

b. (1) The owner or operator of every public "*community*" water system shall, on or before the 20th day of the month following the close of each tax period, render a return under oath to the Director of the Division of Taxation on such form as may be prescribed by the director indicating the number of gallons of water delivered to a consumer and at said time owner or operator shall pay the full amount of tax due.

(2) The owner or operator of every public "*community*" water system shall, within 20 days register with the director on forms prescribed by him.

c. If a return required by this amendatory and supplementary act is not filed, or if a return when filed is incorrect or insufficient in the opinion of the director, the amount of tax due shall be determined by the director from such information as may be available. Notice of such determination shall be given to the taxpayer liable for the payment of the tax. Such determination shall finally and irrevocably fix the tax unless the person against whom it is assessed, within 30 days after receiving notice of such determination, shall apply to the director for a hearing, or unless the director on his own motion shall redetermine the same. After such hearing the director shall give notice of his determination to the person to whom the tax is assessed.

d. Any taxpayer who shall fail to file his return when due or to pay any tax when the same becomes due, as herein provided, shall be subject to such penalties and interest as provided in the "State tax uniform procedure law," subtitle 9 of Title 54 of the Revised Statutes. If the Division of Taxation determines that the failure to comply with any provision of this section was excusable under the circumstances, it may remit such part or all of the penalty as shall be appropriate under such circumstances.

e. (1) Any person failing to file a return, failing to pay the tax, or filing or causing to be filed, or making or causing to be made, or giving or causing to be given any return, certificate, affidavit, representation, information, testimony or statement required or authorized by this amendatory and supplementary act, or rules or regulations adopted hereunder which is willfully false, or failing to keep any records required by this amendatory and supplementary act or rules and regulations adopted hereunder, shall, in addition to any other penalties herein or elsewhere prescribed, be guilty of a crime of the fourth degree.

(2) The certificate of the director to the effect that a tax has not been paid, that a return has not been filed, that information has not been supplied or that inaccurate information has been sup-

plied pursuant to the provisions of this amendatory and supplementary act or rules or regulations adopted hereunder shall be presumptive evidence thereof.

f. In addition to the other powers granted to the director in this section, he is authorized:

(1) To delegate to any officer or employee of his division such of his powers and duties as he may deem necessary to carry out efficiently the provisions of this section, and the person to whom such power has been delegated shall possess and may exercise all of said powers and perform all of the duties delegated by the director;

(2) To prescribe and distribute all necessary forms for the implementation of this section.

g. The tax imposed by this section shall be governed in all respects by the provisions of the "State tax uniform procedure law," subtitle 9 of Title 54 of the Revised Statutes, except only to the extent that a specific provision of this section may be in conflict therewith.

h. The "Safe Drinking Water Fund" (hereinafter referred to as the "fund") is established as a nonlapsing, revolving fund. The fund shall be administered by the department, and shall be credited with all tax revenue collected by the division pursuant to this section. Interest received on moneys in the fund shall be credited to the fund. Moneys in the fund shall be appropriated to the department for all costs associated with the department's administration of *[this amendatory and supplementary act]* **all aspects of the programs set forth in the "Safe Drinking Water Act," P. L. 1977, c. 224 (C. 58:12A-1 et seq.) in the annual budget request of the department***.

12. Section 2 of P. L. 1977, c. 224 (C. 58:12A-2) is amended to read as follows:

2. The Legislature finds and declares that it is a paramount policy of the State to protect the purity of the water we drink and that the Department of Environmental Protection shall be empowered to promulgate and enforce regulations to purify drinking water by filtration or such other treatment method as it may require, prior to the distribution of said drinking water to the public; that the maintenance of high-quality potable water is essential in order to safeguard the health and welfare of the people of the State; that the Federal Safe Drinking Water Act provides a comprehensive framework, *at a minimum, for establishing standards, providing technical assistance, and* for regulating the collection, treatment, *monitoring,* storage, and distribution of potable water, and for consolidating and improving existing State law

regarding potable water; and that it is in the best interests of the people of the State for the State, through its Department of Environmental Protection, to assume primary enforcement responsibility under the Federal Safe Drinking Water Act.

*13. Section 3 of P. L. 1977, c. 224 (C. 58:12A-3) is amended to read as follows:

3. As used in this act[, unless the context clearly requires a different meaning, the following words and terms shall have the following meanings]:

a. "Administrator" means the Administrator of the United States Environmental Protection Agency or his authorized representative;

b. "Contaminant" means any physical, chemical, biological or radiological substance or matter in water;

c. "Commissioner" means the Commissioner of Environmental Protection or his designated representative;

d. "County" means any county or any agency or instrumentality of one or more thereof;

e. "Department" means the Department of Environmental Protection;

f. "Federal act" means the Safe Drinking Water Act, P. L. 93-523, 42 U. S. C. § 300 et al.;

g. "Federal agency" means any department, agency, or instrumentality of the United States;

h. "Municipality" means any city, town, township, borough or village or any agency or instrumentality of one or more thereof;

i. "National primary drinking water regulations" means primary drinking water regulations promulgated by the administrator pursuant to the federal act;

j. "Person" means any individual, corporation, company, firm, association, partnership, municipality, county, State agency or federal agency;

k. "Primary drinking water regulation" means a regulation which:

(1) Applies at a minimum to public water systems;

(2) Specifies contaminants which, in the judgment of the commissioner, may have any adverse effect on the health of persons;

(3) Specifies for each such contaminant either (a) a maximum contaminant level if, in the judgment of the commissioner, it is economically and technologically feasible to ascertain the level of such contaminant in water in public water systems, or (b) if, in the judgment of the commissioner, it is not economically or technologically feasible to ascertain the level of such contaminant, each

treatment technique known to the commissioner which leads to a reduction in the level of such contaminant sufficient to satisfy the requirements of section 4 of this act;

(4) Contains criteria and procedures to assure a supply of drinking water which dependably complies with such maximum contaminant levels, including quality control, sampling frequencies, and testing procedures to insure compliance with such levels and to insure proper operation and maintenance of the system, and requirements as to: (a) the minimum quality of water which may be taken into the system, and (b) siting for new facilities for public water systems;

l. "Public water system" means a system for the provision to the public of piped water for human consumption, if such system has at least 15 service connections or regularly serves at least 25 individuals. Such term includes: (1) any collection, treatment, storage and distribution facilities under control of the operator of such system and used primarily in connection with such system, and (2) any collection or pre-treatment storage facilities not under such control which are used primarily in connection with such system; *"Public community water system" means a public water system which serves at least 15 service connections used by year-round residents or regularly serves at least 25 year-round residents;*

m. "State agency" means any department, agency or instrumentality of this State or of this State and any other state or states;

n. "Supplier of water" means any person who owns or operates a public water system;

o. "Maximum contaminant level" means the maximum permissible level of a contaminant in water which is delivered to the free-flowing outlet of the ultimate user of a public water system or other water system to which State primary drinking water regulations apply, except in the case of turbidity where the maximum permissible level is measured at the point of entry to the distribution system. Contaminants added to the water under circumstances controlled by the user, except those resulting from corrosion of piping and plumbing caused by water quality, are excluded from this definition;

p. "Nonpublic water system" means a water system that is not a public water system;

q. "Sanitary survey" means an on-site review of the water source, facilities, equipment, operation and maintenance of a public or nonpublic water system for the purpose of evaluating the adequacy of the source, facilities, equipment, operation and maintenance for producing and distributing safe drinking water with adequate pressure and volume;

r. "Secondary drinking water regulation" means a regulation applying to one or more water systems, and which specifies the maximum contaminant levels that are required to protect the public welfare; such regulations may apply to any contaminant in drinking water (1) which may adversely affect the taste, odor, or appearance of such water and consequently may cause a substantial number of persons served by such water systems to discontinue their use, or (2) which may otherwise adversely affect the public welfare;

s. "Water system" means a system for providing potable water to any person.*

[13.] *14.* Section 4 of P. L. 1977, c. 224 (C. 58:12A–4) is amended to read as follows:

4. a. The commissioner shall prepare, promulgate and enforce and may amend or repeal (1) State primary drinking water regulations that at any given time shall be no less stringent than *national* regulations in effect at that time; (2) State secondary drinking water regulations; and (3) other regulations to protect potable waters, regulate public and nonpublic water systems, and carry out the intent of this act in any one or more areas of the State requiring a particular safe drinking water program.

b. Subject to section 5 of this act, State primary drinking water regulations shall apply to each public water system in the State, except that such regulations shall not apply to a public water system:

(1) Which consists only of distribution and storage facilities and which does not have any collection and treatment facilities;

(2) Which obtains all of its water from, but is not owned or operated by, a public water system to which such regulations apply;

(3) Which does not sell water to any person; and

(4) Which does not provide water for potable purposes to any carrier which conveys passengers in interstate commerce.

c. The commissioner shall adopt and implement adequate procedures, promulgate appropriate rules and regulations, and issue such orders as are necessary for the enforcement of State primary drinking water regulations and for the provision of potable water of adequate volume and pressure; such regulations and procedures to include but not be limited to:

(1) Monitoring and inspection procedures;

(2) Maintenance of an inventory of public water systems in the State;

(3) A systematic program for conducting sanitary surveys of public water systems throughout the State or in a part thereof

whenever the commissioner determines that such surveys are necessary or advisable;

(4) The establishment and maintenance of a program for the certification of laboratories conducting analytical measurements of drinking water contaminants specified in the State primary and secondary drinking water regulations; and the assurance of the availability to the department of laboratory facilities certified by the administrator and capable of performing analytic measurements of all contaminants specified in the State primary and secondary drinking water regulations;

(5) The establishment and maintenance of [a program] *programs* concerning plans and specifications for the design, [and] construction *and operation* of [new or substantially modified public] water systems, which [program] *programs* (a) [requires] *require* all such plans and specifications[, or either,] to be first approved by the department before any work thereunder shall be commenced; [and] (b) assures that all *water systems* [such projects, upon completion,] will comply with any rules and regulations of the department [concerning their construction]; *and (c) assures and certifies* [will be capable of] compliance with the State primary drinking water regulations or such requirements of the State secondary drinking water regulations as the commissioner deems applicable, and will deliver water with sufficient *quality,* volume and pressure to the users of such systems.

d. The commissioner shall keep such records and make such reports with respect to his activities under subsections a. and c. of this section as may be required by regulations established by the administrator pursuant to the federal act;

e. The commissioner may require any public water system to install, use, and maintain such monitoring equipment and methods, to perform such sampling, to maintain and retain such records of information from monitoring and sampling activities, to submit such reports of monitoring and sampling results, and to provide such other information as he may require to assist in the establishment of regulations under this act, or to determine compliance or noncompliance with this act or with regulations promulgated pursuant to this act;

f. The commissioner shall have the right to enter any premise upon presentation of appropriate credentials during regular business hours, in order to test, inspect or sample any feature of a public water system and in order to inspect, copy or photograph any monitoring equipment or records required to be kept under provisions of this act.

g. The department shall further transmit copies of all rules and regulations proposed pursuant to this act to the Senate and General Assembly on a day on which both Houses shall be meeting in the course of a regular or special session. The provisions of the aforesaid "Administrative Procedure Act" or any other law to the contrary notwithstanding, no such rule or regulation shall take effect if, within 60 days of the date of its transmittal to the Senate and General Assembly, the Legislature shall pass a concurrent resolution stating in substance that the Legislature does not favor such proposed rule or regulation.

[14.] *15.* Section 6 of P. L. 1977, c. 224 (C. 58:12A–6) is amended to read as follows:

6. The commissioner, upon receipt of information that a contaminant which is present in or is likely to enter a [public] water system may present an imminent and substantial endangerment to the health of persons, may take such actions as he may deem necessary in order to protect the health of such persons. Such actions may include, but shall not be limited to: a. issuing such orders as may be necessary to protect the health of persons who are or may be users of such system, including travelers; and, b. commencing a civil action for appropriate relief, including a restraining order or permanent or temporary injunction.

[15.] *16.* Section 9 of P. L. 1977, c. 224 (C. 58:12A–9) is amended to read as follows:

9. The commissioner is authorized [and empowered] in order to carry out the provisions and purposes of this act, to:

a. Perform any and all acts necessary to carry out the purposes and requirements of this act relating to the adoption and enforcement of any regulations authorized pursuant to this act;

b. Administer and enforce the provisions of this act and all rules, regulations, and orders promulgated, issued, or effective hereunder;

c. Enter into agreements, contracts, or cooperative arrangements, under such terms and conditions as he deems appropriate *[with]* *the Department of Health and any* other state *[agencies]* *agency*, federal agencies, municipalities, counties, educational institutions, municipal or county health departments, or other organizations or individuals;

d. Receive financial and technical assistance from the federal government and other public or private agencies;

e. Participate in related programs of the federal government, other states, interstate agencies, or other public or private agencies or organizations;

f. Establish adequate fiscal controls and accounting procedures to assure proper disbursement of and accounting for funds appropriated or otherwise provided for the purpose of carrying out the provisions of this act;

g. Delegate those responsibilities and duties as deemed appropriate for the purpose of administering the requirements of this act;

h. Establish and collect fees, in accordance with a fee schedule adopted as a rule or regulation, for conducting inspections and laboratory analyses and certifications as may be necessary;

i. Prescribe such regulations and issue such orders as are necessary or appropriate to carry out his functions under this act;

j. Conduct research, investigations, experiments, demonstrations, surveys, and studies relating to the causes, effects, extent, prevention, and control of contaminants in drinking water.

k. Provide for the education of the public as to the causes, effects, extent, prevention, and control of contaminants in drinking water.

l. Collect and make available, through publications, a data management system and other appropriate means, the results of and other information, including appropriate recommendations by the institute in connection therewith, pertaining to such research and other activities;

m. Cooperate with and contract with other public and private agencies, institutions, and organizations and with any industries involved, in the preparation and conduct of such research and other activities;

n. Review, treatment methods used for removal of contaminants from drinking water;

*o. Provide for the education and training of departmental personnel in those areas relating to the causes, effects, extent, prevention and control of contaminants in drinking water**[.]* *;*

**p. Establish and collect reasonable fees, in accordance with a fee schedule adopted as a rule or regulation for the estimated costs of administering and enforcing the programs pursuant to this amendatory and supplementary act, to the extent that the costs are not available from the fund, including but not limited to conducting inspections, laboratory analyses and certifications as may be necessary;*

q. The authority to collect fees pursuant to this section may be delegated by the commissioner to the appropriate county agency consistent with a delegation, pursuant to the provisions of the

"County Environmental Health Act," P. L. 1977, c. 443 (C. 26:3A2-21 et seq.), of any authority to administer the provisions of this act.

[16.] *17.* Section 10 of P. L. 1977, c. 224 (C. 58:12A-10) is amended to read as follows:

10. a. If any person violates any of the provisions of this act or any rule, regulation or order promulgated or issued pursuant to the provisions of this act, the department may institute a civil action in a court of competent jurisdiction for injunctive *or any other appropriate* relief to prohibit and prevent such violation or violations and the said court may proceed in the action in a summary manner.

b. Any person who violates the provisions of this act or any rule, regulation or order promulgated pursuant to this act shall be liable to a *civil administrative penalty of not* *[*more than $5,000.00 for each offense or* penalty of not [more than $5,000.00 for each offense] *less than $1,000.00 nor]* *more than $5,000.00 for the first offense, not less than $5,000.00 nor more than $10,000.00 for the second offense, and up to $25,000.00 for the third and each subsequent offense*[, to be collected in a civil action by a summary proceeding under "the penalty enforcement law" (N. J. S. 2A:58-1 et seq.), or in any case before a court of competent jurisdiction wherein injunctive relief had been requested. The Superior Court[, County Court] and county district court shall have jurisdiction to enforce said "penalty enforcement law"]*. If the violation is of a continuing nature, each day during which it continues *subsequent to receipt of an order to cease the violation* shall constitute an additional, separate and distinct offense. *No civil administrative penalty shall be levied except subsequent to the notification of the violator by certified mail or personal service. The notice shall include a reference to the section of the statute, regulation, order or permit condition violated; a concise statement of the facts alleged to constitute the violation; a statement of the amount of the civil penalties to be imposed; and a statement of the violator's right to a hearing. The violator shall have 20 days from receipt of the notice within which to deliver to the commissioner a written request for a hearing. Subsequent to the hearing and upon a finding that a violation has occurred, the commissioner may issue a final order after assessing the amount of the fine specified in the notice. If no hearing is requested, the notice shall become a final order upon the expiration of the 20 day period. Payment of the penalty is due when a final order is issued or when the notice becomes a final order. The authority to levy a civil administrative*

penalty is in addition to all other enforcement provisions in this act, and the payment of a civil administrative penalty shall not be deemed to affect the availability of any other enforcement provision in connection with the violation for which the penalty is levied.

c. The department is hereby authorized and empowered to compromise and settle any claim for a penalty under this section in such amount in the discretion of the department as may appear appropriate and equitable under all of the circumstances *including the posting of a performance bond by the violator*.

d. Any person who violates this act or an administrative order issued pursuant to subsection b. of this section or a court order issued pursuant to subsection a. of this section or who fails to pay a civil administrative penalty in full pursuant to subsection b. of this section shall be subject, upon order of the court, to a civil penalty not to exceed $10,000.00 per day of the violation, and each day's continuance of the violation shall constitute a separate and distinct violation. Any penalty imposed under this subsection may be recovered with costs in a summary proceeding pursuant to "the penalty enforcement law" (N. J. S. 2A:58-1 et seq.). The Superior Court and county district court shall have jurisdiction to enforce "the penalty enforcement law."*

*18. Section 2 of P. L. 1940, c. 5 (C. 54:30A-50) is amended to read as follows:

2. Definitions: As used in this act—unless the context otherwise requires:

(a) "Taxpayer" means any corporation subject to taxation under the provisions of this act. **A person or business entity owning or operating a cogeneration facility as defined in subsection (j) of this section shall not be deemed a corporation subject to taxation under this act unless it shall be a public utility as specifically enumerated in sections 1 and 6 of P. L. 1940, c. 5 (C. 54:30A-49 [et seq.] *and C. 54:30A-54*).**

(b) "Real estate" means lands and buildings, but it does not include railways, tracks, ties, lines, wires, cables, poles, pipes, conduits, bridges, viaducts, dams and reservoirs (except that the lands upon which dams and reservoirs are situated are real estate), machinery, apparatus and equipment, notwithstanding any attachment thereof to lands or buildings.

(c) "Gross receipts" means all receipts from the taxpayer's business over, in, through or from the whole of its lines or mains but does not include any sum or sums of money received by the taxpayer in payment for gas or electrical energy or water sold

and furnished to another public utility which is also subject to the payment of a tax based upon its gross receipts, **nor any sum or sums of money received by the taxpayer from a cogenerator in payment for cogenerated electrical energy resold by the taxpayer to the producing cogenerator where produced,** nor in the case of a street railway or traction corporation the receipts from the operation of autobuses or vehicles of the character described in **[Title 48, chapter 15, section 41 to the end of the chapter, of the Revised Statutes (Revised Statutes, section 48:15–41, et seq.)]** ***R. S. 48:15–41 through R. S. 48:15–56, inclusive***, nor in the case of a sewerage corporation an amount equal to any sum or sums of money payable by such sewerage corporation to any board, commission, department, branch, agency or authority of the State or of any county or municipality, for the treatment, purification or disposal of sewage or other wastes, *nor in the case of a water purveyor, the amount which represents the water tax imposed by section 11 of P. L. 1983, c. .... (C. .....) (now pending before the Legislature as Assembly Committee Substitute for Assembly Bill No. 280 of 1982) and which is included in the tariff altered pursuant to section 6 of P. L. 1983, c. .... (C. .....) (now pending before the Legislature as Assembly Committee Substitute for Assembly Bill No. 280 of 1982).*

(d) "Scheduled property" means only those classes or types of property of a taxpayer set forth in section 10 of this act and which are to be used in computing the apportionment value as herein defined.

(e) "Unit value" means the value set forth in section 10 of this act to be uniformly applied to each of the several classes or types of scheduled property in computing the apportionment value.

(f) "Apportionment value" or "apportionment valuation" means the result obtained by multiplying the quantities of each class or type of scheduled property of a taxpayer by the applicable unit value, and the addition of such results.

(g) "Public street, highway, road or other public place," includes any street, highway, road or other public place which is open and used by the public, even though the same has not been formally accepted as a public street, highway, road, or other public place.

(h) "Service connections" means the wires or pipes connecting the building or place where the service or commodity supplied by the taxpayer is used or delivered, or is made available for use or delivery, with a supply line or supply main in the street, highway, road, or other public place, or with such supply line or supply main on private property.

(i) "State Tax Commissioner" or "director" means the Director of the Division of Taxation in the Department of the Treasury*.

(j) "Cogenerator" means a person or business entity which owns or operates a cogeneration facility in the State of New Jersey which facility is a plant, installation or other structure whose primary purpose is the sequential production of electricity and steam or other forms of useful energy which are used for industrial, commercial, heating or cooling purposes; and which is designated by the Federal Energy Regulatory Commission, or its successor, as a "qualifying facility" pursuant to the provisions of the "Public Utilities Regulatory Policies Act of 1978," Pub. L. 95–617.

[17.] *19.* There is appropriated from the General Fund the sum of $500,000.00 to the Department of Environmental Protection to carry out the purposes of this amendatory and supplementary act. This appropriation shall be repaid to the General Fund as soon as practicable from the assessments made pursuant to section 11 of this amendatory and supplementary act.

[18.] *20.* This act shall take effect immediately.