INDEX

Summons 1
Complaint 2
Exhibit A 8
Answer 19
Amendment to Answer..... 25
Rule on Motion Addressed to Answer..... 29
Reply 31
Rule for Revivor..... 35
Postea 37
Judgment 38
Notice and Grounds of Appeal..... 39

TESTIMONY.

For Plaintiff.

Benjamin F. Taylor,
direct examination..... 58
(recalled) cross " 111
re-direct " 136
re-cross " 141
Herbert W. Oviatt,
direct examination..... 98
Henry F. Kurtz,
direct examination..... 101
Louis H. Gunther,
direct examination..... 105
cross " 107
(recalled) cross " 144
Harry A. Strachan,
direct examination.....148, 152
cross " 151, 171
re-direct " 191
James G. Graham,
direct examination.....192, 200
Sophia F. Hess,
direct examination..... 197
cross " 198
(recalled) By the Court..... 204

PAGE

Helen V. Lee,
direct examination..... 206
Logan Cresap,
direct examination..... 207
cross " 227
re-direct " 228
Herbert H. Thompson,
direct examination..... 229
Colonel Rogers Bernie,
direct examination..... 231
Colman R. Sample,
direct examination..... 239
Motion for a Non-Suit..... 241
Motion for Direction of a Verdict..... 247
Charge to Jury..... 248
Defendants' Exceptions to Charge..... 266
Further Charge to Jury..... 268
Plaintiff's Requests to Charge..... 270
Defendants' Requests to Charge..... 275

SUMMONS.

New Jersey, *ss.*

The State of New Jersey to Christian Fleissner. You are Summoned to
(L. S.) answer the annexed complaint of James G. Graham, Trustee in Bankruptcy of Maxim Corporation, in an action at law in the Supreme Court. And Take Notice that unless you file your answer to the said complaint with the Clerk of the said Court at Trenton, within twenty days after the service upon you of this writ and the annexed complaint, the plaintiff may proceed with the suit and judgment may be entered against you.

Witness, William S. Gummere, Esquire, Chief Justice of the Supreme Court at Trenton, this seventh day of November, 1927.

EDWARD J. KELLEHER,
Clerk.

McCarter & English,
Attorneys.

COMPLAINT.

Filed November 18, 1927.

New Jersey Supreme Court

ESSEX CIRCUIT.

JAMES G. GRAHAM, Trustee in Bankruptcy of Maxim Corporation, *Plaintiff,* *vs.* CHRISTIAN FLEISSNER, *Defendant.*	*Action at Law.* *Complaint.*

The plaintiff, of Newburgh, in the County of Orange and State of New York, says that:

1. The plaintiff is the duly appointed, qualified and acting trustee of the bankrupt estate of Maxim Corporation (herein called the Corporation).

2. The Corporation was duly organized on or about August 25, 1915, under the General Corporation Laws of the State of Delaware as found in Chapter 65 of the Revised Code of the public statutes of said State, which was enacted by the legislature and approved by the Governor of said State on October 19, 1914, and in effect on January 1, 1915. Said Chapter 65 of the Revised Code of Delaware contained the following provision which was in force at the time of the organization of the Corporation:

> "1934. Sec. 20. *Stockholders Liability for Part Paid For Stock:* When the whole capital stock of a corporation shall not have been paid in, and the assets shall be insuffi-

> cient to satisfy the claims of its creditors, each stockholder shall be bound to pay on each share held by him the sum necessary to complete the amount of the par value of such share as fixed by the charter of the company or its certificate of incorporation, or such proportion of such sum as shall be required to satisfy the debts of the company. * * *"

The highest court of appellate jurisdiction of said State has construed the provision hereinabove quoted to impose upon all beneficial owners, as well as holders, of par value stock of a corporation organized under said General Corporation Laws, purporting to be fully paid but in fact not fully paid (except *bona fide* purchasers of such stock without notice of the fact that the same was not fully paid) an obligation to pay to the receiver of such corporation appointed under the Insolvency Act of said State the full par value of such stock or the portion thereof necessary to pay the debts of the corporation, with interest and expenses, which obligation arises upon the levying of a ratable assessment by the Court in which the insolvency proceedings are pending after the persons to be assessed have been notified and given an opportunity to appear and be heard upon the levying of such assessment. In fixing the rate per share to be assessed the Court may take into consideration the financial responsibility of the various persons subject to assessment. Under the Federal Bankruptcy Act, as construed by the various United States Circuit Courts of Appeal, including that for the Third Circuit, in which the State of Delaware is situated, and the United States Supreme Court, in case such corporation has been adjudicated bankrupt, the procedure for assessment, as hereinabove outlined, is conformed to

the bankruptcy procedure in such manner that the assessment is levied by the court of bankruptcy in which the bankrupt estate is being administered (whether within or without the State of Delaware) and the amounts assessed are recoverable in plenary suits by the trustee in bankruptcy. The findings of the bankruptcy court in the proceeding for such assessment are conclusive and binding upon all of the persons assessed except as to matters of defense personal to themselves.

3. The par value of the shares of the capital stock of the Corporation, as fixed by its certificate of incorporation, was ten dollars ($10) per share. The total number of shares authorized was one million (1,000,000), all of which except 35 shares were originally issued by the Corporation as fully paid stock in exchange for certain alleged inventions, patents, services, agreements and other pretended considerations. Said alleged inventions, patents, services, agreements and other pretended considerations were of no value or of only nominal value, not exceeding ten thousand dollars ($10,000) in all. The shares so issued were never fully paid, and were subject to assessment under the provision of the Delaware statute hereinabove mentioned. Of said stock the defendant became the beneficial owner of 6,375 shares, having an aggregate par value of $63,750, with notice of the fact that said stock had been issued as aforesaid.

4. An involuntary petition of bankruptcy was duly filed against the Corporation on or about May 29, 1919, in the District Court of the United States for the Southern District of New York, and such proceedings were duly had thereunder that on or about June 2, 1919, the Corporation

was duly adjudicated a bankrupt. By order duly entered in said bankruptcy proceedings on or about October 24, 1922, said proceedings were referred by said Court to Peter B. Olney, Jr., one of the Referees in Bankruptcy in said District. Thereafter the administration of the bankrupt estate duly proceeded before said Referee.

5. On or about June 17, 1925, the plaintiff, as Trustee of the bankrupt estate of the Corporation, filed with said Referee in Bankruptcy a petition setting forth the facts with reference to the issue and transfer of all of the shares of stock of the Corporation and the condition of the bankrupt estate, alleging that certain persons named therein, among whom was the defendant, appeared to have been beneficial owners of said stock, and praying that said Court would ascertain the respective amounts remaining unpaid on the shares of the capital stock of the Corporation, the persons appearing at any time to have been interested in said stock under such circumstances as to be liable for the debts of the Corporation, and the respective amounts of such stock, the aggregate amount of the debts of the Corporation and the assets applicable to the payment thereof, and whether or not it was necessary to order an assessment on the unpaid stock in order to provide for the payment of said debts, the amount of interest properly to be provided for by such assessment, the expenses of levying, collecting and enforcing such assessment and of completely administering the bankrupt estate, and the gross rate of assessment necessary in order to pay the debts with interest and expenses, and that the Court would levy an initial assessment at the gross rate so found upon all of the unpaid shares of stock of the Corpora-

tion with respect to which any responsible persons appeared to be liable, and would find the amounts to be credited on said shares, respectively, the net amounts payable by such persons, and the date upon which said amounts should be paid, and that the Court would enter forthwith an order requiring the persons named in the petition to appear and file their answers thereto, and set a date for a hearing thereof. Thereupon, and on or about June 19, 1925, said Referee duly signed an order to show cause, directing the persons named therein, among whom was the defendant, and all other parties in interest to show cause at a time and place specified in said order why an assessment or assessments should not be ordered and levied on the capital stock of the bankrupt as prayed for in said petition, and such findings made and order or orders entered with respect to such assessment or assessments as to the Referee, after taking proofs, might seem just and proper; provided that any such order or orders of assessment entered upon said petition should be without prejudice to the right of any person who might thereafter be sued on said assessment or assessments in any court of competent jurisdiction to make any defense thereto personal to himself, and further directing that answers to said petition be filed on or before a date specified, and that notice of the hearing on said petition be given by serving or mailing a copy of said petition and said order to show cause upon or to each of the persons named therein at their addresses last known to said Trustee, the plaintiff herein. Thereafter, and on or before the last day for such service or mailing as specified in said order to show cause, copies of said petition and of said order to show cause

were duly mailed to each of the persons named in said petition, including the defendant, at their addresses last known to the plaintiff.

6. Certain of the persons named in said petition having appeared by counsel and opposed the granting of the relief prayed for in said petition, the Referee duly proceeded to take proofs in support of the allegations contained in said petition and in the answers filed thereto, and after hearing such proofs, and the arguments of counsel, the Referee on or about August 24, 1926, duly entered an order, a copy of which is hereto annexed, marked "Exhibit A," and made a part hereof, whereby, among other things, the sum of $19,572.97 was duly assessed against the defendant on account of the 6,375 shares of stock acquired by him as aforesaid, and the plaintiff was empowered to collect the amount so assessed by suit at law in a court of competent jurisdiction.

7. The plaintiff duly made demand upon the defendant of the sum of $19,572.97 by mailing to the defendant on or before September 2, 1926, a copy of said order as directed by the terms thereof; but the defendant has failed and refused to pay to the plaintiff said sum of $19,572.97 or any part thereof, or to tender or cause to be tendered to the plaintiff a receipt or receipts equivalent to such payment as permitted by the terms of said order.

WHEREFORE, the plaintiff demands the sum of $19,572.97 with interest from September 7, 1926 and costs of suit.

McCARTER & ENGLISH,
Attorneys for Plaintiff.

Filed November 18, 1927.

EXHIBIT A.

IN THE

DISTRICT COURT OF THE UNITED STATES

FOR THE SOUTHERN DISTRICT OF NEW YORK.

IN THE MATTER *of* MAXIM CORPORATION, Bankrupt.	In Bankruptcy No. 26,871.

ORDER LEVYING ASSESSMENT ON CAPITAL STOCK.

THE PETITION of James G. Graham, trustee in bankruptcy of the above-named bankrupt, verified June 17, 1925, praying among other things that the court order and levy an assessment upon all of the unpaid shares of stock of the bankrupt with respect to which any responsible persons appear to be liable having been filed herein, and the Referee having signed an order to show cause dated June 19, 1925, directing the persons named therein and all other parties in interest to show cause at a time and place specified in said order why an assessment or assessments should not be ordered and levied as prayed for in said petition and such findings made and order or orders entered with respect to said assessment or assessments as to the Referee, after taking proofs, might seem just and proper, provided that any such order or orders of assessment should be without prejudice to the right of any person who

might thereafter be sued on said assessment or assessments in any court of competent jurisdiction to make any defense thereto personal to himself, unless such person should have set up said defense and consented to the determination thereof in this proceeding, and further directing that answers to said petition be filed on or before a date specified, and that notice of the hearing on said petition be given by service or mailing as provided in said order;

AND due proof having been made before the Referee that notice of said hearing had been given in compliance with said order;

AND answers to said petition having been filed by Robert E. Crane, Edward J. Bullwinkel, Jay Robinson Duff, Elmer Z. Halstead and Minnie Wiegman as administratrix of the Estate of John W. O'Bannon, and no other persons named in said petition or order having filed any answer thereto, or shown any cause why an assessment as prayed for should not be made;

AND said petition and order to show cause, and said answers, having come on to be heard by the Referee upon testimony presented and taken orally before him, and upon records and exhibits there produced, and having been argued by counsel, and duly considered by the Referee;

AND IT APPEARING TO AND BEING FOUND BY THE REFEREE from the record in this proceeding that the proof so taken supports the findings of fact and law and the directions in this order contained, to-wit:

1. That Maxim Corporation, formerly named Maxim Munitions Corporation, was incorporated under the laws of the State of Delaware, and was adjudicated bankrupt, and said James G. Graham

is the duly elected, qualified and acting trustee of the estate of said bankrupt;

2. That the period within which claims may be filed against said estate has expired, that all objections filed to claims have been heard and finally disposed of, that all claims entitled to priority have been paid, except the claim of the United States to provide for which funds in the hands of the trustee have been set aside, and that after deducting the dividend of three per cent. paid on March 12, 1926, the respective principal amounts of the claims remaining unpaid, and the names of the claimants or their assignees, are as follows:

Mixam, Inc	$1,078,137.00
American Stamp Manufacturing Company	7.76
Jasper Bayne Co.	2,560.74
Charles Smith	2,706.73
Christian Fleissner	1,442.63
Haggerty Refining Co.	333.04
Hammond Typewriter Co.	7.27
Journal of Commerce & Commercial Bulletin	3.35
Keuffel & Esser Co.	18.22
Knox & Dooling	485.00
E. W. Logan	17.46
Nestledown Realty Co.	97.00
New York Edison Co.	9.64
John W. O'Bannon	120,861.92
David Richards	106.46
Teresa Sweeny	1,020.62
Henry Rutgers Remsen Coles and Margaret Davidson Coles, as Executors of Estate of J. Campbell Thompson	3,395.00
Westchester Lighting Co.	26.66
Joseph A. Wigmore	1,642.64
United States R. R. Adm'	108.81
	$1,212,987.95

3. That the funds in the hands of the trustee will be no more than required for the payment of the compromise of said claim of the United

States, and the general expenses of administration;

4. That there are no funds or assets in the estate with which to pay the amounts remaining unpaid on the claims, or any part thereof, except the sums which are due on the unpaid shares of stock of the bankrupt, and that an assessment should be made on said shares in order to provide for the payment of said claims and the expense of levying and collecting such assessment;

5. That the aggregate principal amount unpaid on said claims is $1,212,987.95; that the interest on said claims to August 29, 1926, is $577,849.99; that pursuant to the order dated December 11, 1925, entered herein the maximum amount allowable for fees and expenses is $25,000; and that, therefore, the aggregate sum necessary to pay the debts of the bankrupt, with interest and expenses, and to be assessed upon the unpaid shares of stock, is $1,815,837.94.

6. That 999,965 shares of the capital stock of the bankrupt, aggregating $9,999,650 par value, were originally issued to or upon the order of Robert Sweeny without substantial value given therefor, in the names of the following persons and in the following amounts, respectively:

	No. of Shares
Hudson Maxim	93,996
Edward Purcell	5,000
Edwin Packard	45,000
M. F. Burns	10,000
William A. Scully	20,000
Robert E. Crane	12,750
Edward H. Beckert	70,000
Laurance Angel	35,000
Benj. F. Taylor, Asst. Treas.	300,000
Robert Sweeny	408,219
Total	999,965

7. That said Taylor was an officer of the bankrupt and held said 300,000 shares for the treasury of the bankrupt and had no personal interest therein;

8. That insufficient evidence has been produced before the Referee to justify an assessment against said Burns or his representatives, said Packard or his representatives or said Purcell with respect to said original issue;

9. That on motion of the trustee this proceeding was dismissed with costs as against said Crane, Bullwinkel and Halstead;

10. That said Sweeny appears to be liable for an assessment with respect to all of said 999,965 shares; but the financial condition of said Sweeny appears to be such that an assessment of any sum in excess of $100,000 would be futile and endanger the collection of an assessment from other of the respondents;

11. That said Maxim, Scully and Beckert appear to be liable for an assessment with respect to the shares issued in their names as aforesaid, respectively, but the financial condition of each of said persons appears to be such that the as-

sessment against them of sums in excess of the following amounts, respectively, would be futile and endanger the collection of an assessment from other of the respondents:

Hudson Maxim	$100,000
William A. Scully	25,000
Edward H. Beckert	25,000

12. That the financial condition of said Angel is such that the assessment of any amount against him would be futile;

13. That subsequently to the original issue of said 999,965 shares, legal or beneficial ownership of said shares, or part of them, passed to various persons; but insufficient evidence has been produced before the Referee to justify an assessment against any of said persons except as hereinafter set forth;

14. That of said 999,965 shares, 510,000 shares were sold by said Sweeny, Maxim, Packard, Beckert and Angel to a syndicate for the price of $200,000, and that the members of said syndicate are in law chargeable with notice of the fact that said shares were issued by the bankrupt without being paid for;

15. That the members of said syndicate, and the number of shares apportionable to their respective participations, were as follows:

	No. of Shares
George G. Bourne	12,750
Milton J. Budlong	12,750
L. D. Burkhardt	1,275
H. R. Remsen Coles	638
Margaret D. Coles	637
Herbert Lowell Dillon	19,125
George A. Gaston	12,750
Carlisle J. Gleason	38,250
Nathan A. Gros	6,375
James B. Higgins	50
Adon J. Hoffman	6,375
International Machine & Tool Corporation	25,500
William T. Koch	12,750
William P. Maloney	12,750
J. W. O'Bannon	127,500
Esmond P. O'Brien	22,950
Edwin Packard	15,937
Theodore D. Palmer / Christian Fleissner	6,375
Theodore D. Palmer / Otto H. Oppenheimer	6,375
Charles H. Sabin	12,750
George W. Sanborn	12,750
Julius Siegbert	7,650
James B. Spencer / J. Campbell Thompson	2,550
Teresa Sweeny / Michael F. Burns	15,000
Teresa Sweeny	16,875
J. Campbell Thompson	1,225
Clarence L. Warner and James J. Godfrey	25,500
J. M. Townley	15,938
William H. Williams	12,750
J. A. Wigmore	12,750
Charles A. Wimpfheimer	25,500
Samuel Zucker	7,650
Total	510,000

16. That after allowing all sums properly to be credited on said 510,000 shares by reason of payments into the treasury of the bankrupt arising from the sale of said shares or part thereof, there still remains unpaid on said shares an aggregate sum more than $250,000 in excess of the

amount required to be provided for by assessment as aforesaid;

17. That an assessment of $3.0702704 upon each of said 510,000 shares would, in addition to the $250,000 to be assessed against said Sweeny, Maxim, Scully and Beckert as aforesaid, aggregate approximately the total sum of $1,815,837.94 to be provided for as aforesaid;

18. That the following, designated Schedule A, is a list of the persons who appear to be liable for an assessment upon the unpaid shares of capital stock of the bankrupt, and the respective amounts to be assessed against them:

SCHEDULE A.

Robert Sweeny	$ 100,000.00
Hudson Maxim	100,000.00
William A. Scully	25,000.00
Edward H. Beckert	25,000.00
George G. Bourne	39,145.95
Milton J. Budlong	39,145.95
L. D. Burkhardt	3,914.59
H. R. Remsen Coles	1,958.83
Margaret D. Coles	1,955.76
Herbert Lowell Dillon	58,718.92
George A. Gaston	39,145.95
Carlislie J. Gleason	117,437.84
Nathan A. Gros	19,572.97
James B. Higgins	153.51
Adon J. Hoffman	19,572.97
International Machine & Tool Corporation	78,291.90
William T. Koch	39,145.95
William P. Maloney	39,145.95
Minnie Wiegman, as administratrix of the estate of John W. O'Bannon, deceased	391,459.48
Esmond P. O'Brien	70,462.71
Elizabeth H. Packard and Harold S. Gladwin, as executors of the estate of Edwin Packard, deceased, and as executors of the estate of Julia H. Packard, deceased; and Mildred P. Halsey, Clara P. Gladwin and Elizabeth H. Packard as distributees of the property of Julia H. Packard, deceased	48,930.90

Josephine D. Palmer, as executrix of the estate of Theodore D. Palmer, deceased Christian Fleissner	19,572.97
Josephine D. Palmer, as executrix of the estate of Theodore D. Palmer, deceased Edward A. Pruden, as administrator with the will annexed of Otto H. Oppenheimer, deceased	19,572.97
Charles H. Sabin	39,145.95
Hilda A. Klutz and William K. Harvey, as executors of the estate of George W. Sanborn, deceased, and Hilda A. Klutz, as residuary legatee	39,145.95
Julius Siegbert	23,487.57
Margaret A. Spencer, as executrix of the estate of James B. Spencer, deceased.... Henry Rutgers Remsen Coles and Margaret Davidson Coles, as executors of the estate of J. Campbell Thompson, deceased, and as distributees of his property	7,829.19
Teresa Sweeny Francis L. Burns and Lillian Barry, as executors of the estate of Michael F. Burns, deceased	46,054.06
Teresa Sweeny	51,811.01
Henry Rutgers Remsen Coles and Margaret Davidson Coles, as executors of the estate of J. Campbell Thompson, deceased, and as distributees of his property	3,761.08
Clarence L. Warner and James J. Godfrey	78,291.90
J. M. Townley	48,933.97
William H. Williams	39,145.95
Joseph A. Wigmore	39,145.95
Charles A. Wimpfheimer	78,291.90
Samuel Zucker	23,487.57
Total	$1,815,837.92

Now, on motion of Ralph M. Arkush, special attorney for the trustee, it is ADJUDGED AND ORDERED as follows:

FIRST. That the amount necessary to be raised in order to pay the unpaid claims of the creditors of said bankrupt corporation, with interest to

August 29, 1926, and the expenses of assessment and collection, is $1,815,837.94;

SECOND. That it is necessary to assess said sum upon the shares of capital stock of the bankrupt which have not been paid for in full, and against the persons who appear to be liable with respect to said shares;

THIRD. That for the purpose aforesaid said sum is hereby levied and assessed upon the unpaid shares of stock of the bankrupt, or such of said shares as were held by persons who or whose representatives appear to be liable with respect thereof and able to respond to an assessment thereon;

FOURTH. That said sum is assessed against the persons and in the amounts, respectively, set forth in Schedule A hereinabove contained;

FIFTH. That each of the persons named in said Schedule A pay to James G. Graham, trustee of the bankrupt estate, at his office, No. 165 Broadway, Borough of Manhattan, City and State of New York, on or before September 7, 1926, the respective sum set opposite his name in said Schedule A;

SIXTH. That the trustee make demand of such payment by mailing to each of said persons on or before September 2, 1926, a copy of this order;

SEVENTH. That the trustee shall accept, in payment and satisfaction of the respective amount hereinabove assessed against any person named in said Schedule A, a receipt or receipts executed by the owner or owners of a claim or claims duly allowed against the bankrupt estate for the sum which would be lawfully distributable on said claim or claims in case the entire amount

hereinabove assessed upon the unpaid shares of capital stock of the bankrupt were collected by the trustee in cash, to the full extent of the face amount of the receipt or receipts which may be tendered to the trustee for such purpose;

EIGHTH. That in the event that any of the persons named in said Schedule A shall fail within the time hereinabove limited to pay to the trustee the respective sum assessed against him as aforesaid, or tender or cause to be tendered to the trustee a receipt or receipts equivalent to such payment as hereinabove permitted, the trustee is hereby directed to institute and prosecute such action or actions, suit or suits or other proceedings, in any court having jurisdiction, as the trustee may be advised by counsel, for the purpose of collecting the amount so assessed;

NINTH. That this order is and shall be deemed to be without prejudice to the right of any person named in said Schedule A or his representative who may hereafter be sued in any court of competent jurisdiction for the collection of the respective sum hereinabove assessed against him to make any defense to said suit personal to himself.

TENTH. That this proceeding is dismissed as against the respondents Halstead, Crane and Bullwinkel, with costs.

New York, August 24th, 1926.

PETER B. OLNEY, JR.,
Referee.

ANSWER.

Filed November 22, 1927.

NEW JERSEY SUPREME COURT.

ESSEX CIRCUIT.

JAMES G. GRAHAM, Trustee in Bankruptcy of Maxim Corporation, *Plaintiff,* *vs.* CHRISTIAN FLEISSNER, *Defendant.*	*Action at Law.* *Answer.*

Defendant, Christian Fleissner, of the City of Newark, County of Essex and State of New Jersey, answering the complaint, says:

1. He admits the statements contained in paragraph 1.

2. He has no knowledge of the statements contained in paragraph 2, and therefore denies the same.

3. Answering the statements contained in paragraph 3, he admits that the par value of the stock of the corporation as fixed by the certificate of incorporation, was $10.00. He denies the remaining statements contained in paragraph 3.

4. He admits that an involuntary petition in bankruptcy was duly filed against the corporation, on or about the 29th day of May, 1919, in the District Court for the United States, Southern District of New York, and that said corporation was adjudged a bankrupt. He has no knowledge of the remaining statements con-

tained in paragraph 4, and therefore denies the same.

5. He has no knowledge of the statements contained in paragraph 5, and therefore denies the same. He says that he never received any notice of such proceedings; he further says that he was not a party to said proceedings and did not appear therein, and is not bound thereby.

6. He has no knowledge of the statements contained in paragraph 6, and therefore denies the same, and says that the Referee had no power or jurisdiction to make the order of August 24, 1926, and no power or jurisdiction to make an order binding upon this defendant with respect to the matters and things set forth in said order.

7. He has no knowledge of whether or not the demand was mailed to this defendant for the payment of the said sum of $19,572.97 referred to in paragraph 7, and says if any such demand was in fact mailed it never reached defendant, and defendant has no knowledge thereof. He admits that he has not paid to plaintiff the said sum referred to in paragraph 7.

FIRST SEPARATE DEFENSE.

1. Defendant says that he was not at the time of the insolvency of the corporation referred to in the complaint, and never was the holder of 6,375 shares of stock of said corporation.

SECOND SEPARATE DEFENSE.

1. Defendant says that any of the stock of said corporation, of which he was the holder, was purchased by him for value without notice of the fact that said stock was not fully paid, and was

sold by him for bona fide consideration before the insolvency of the corporation.

THIRD SEPARATE DEFENSE.

Defendant says that if there is any cause of action against defendant it accrued more than 3 years before the commencement of this action, and defendant pleads the provisions of the Statute of Limitations of the State of Delaware which provides that no action of trespass, replevin, detinue, debt not founded on record or speciality account, assumpsit or case shall be sued after three years from the accruing of the cause of action.

FOURTH SEPARATE DEFENSE.

1. Defendant pleads the First Section of "An Act Concerning Limitation of Actions of the State of New Jersey" and says that the cause of action against defendant, if any exist, accrued more than six years before the commencement of the action.

FIFTH SEPARATE DEFENSE.

1. Defendant says that under the Laws of Delaware, under which said corporation was incorporated, and the certificate of incorporation, stockholders are not liable for payment of corporate debts except to the extent of the unpaid balance of subscription.

2. Defendant says that he was not a subscriber to the capital stock of said corporation.

3. Defendant pleads the Law of Delaware with respect to the matters aforesaid.

Answer.

SIXTH SEPARATE DEFENSE.

1. Defendant says that under the Law of Delaware, which defendant pleads, unpaid subscriptions can only be recovered after judgment has been obtained against the corporation and execution returned unsatisfied and defendant says that no judgment was obtained against the corporation and execution returned unsatisfied.

SEVENTH SEPARATE DEFENSE.

1. Defendant pleads the provisions of Chapter 50 of the Laws of 1897 of the State of New Jersey, approved March 30, 1897, 2 Comp. Stat. of N. J., Sec. 94A-94B, p. 1656, and says:

a. The purpose of this suit is to enforce a statutory personal liability of defendant as stockholder of the corporation referred to in the complaint.

b. Such statutory personal liability is created by and arises from statutes or laws of the State of Delaware.

c. Said corporation referred to in the complaint is a corporation of Delaware, and a corporation foreign to this State, and this suit is brought against defendant, a resident of this State, and who was a resident of this State at the time of the alleged holding by him of the stock of said corporation.

d. Defendant says that under the provisions of the Statute in such case made and provided this action cannot be maintained at law.

Answer.

EIGHTH SEPARATE DEFENSE.

1. Defendant says that under the Law of Delaware, upon which laws the liability of this defendant are said to arise, there is a special and exclusive remedy for the enforcement of the alleged liability prescribed by the statute, and such special remedy is a judgment by a creditor against the corporation, execution against the corporation returned unsatisfied and then a suit by such creditor against the stockholder, and by the said law the stockholder is then given the right, if he pay the judgment, to recover over against the corporation, and defendant pleads Chapter 65 of the "Revised Code of Delaware, relating to Corporations," particularly Sec. 5, Sec. 20, Sec. 50 and Sec. 51, of said Chapter of the "Revised Code of Delaware relating to Corporations," which said sections were in full force and effect when any liability of defendant was assumed or accrued and are now in force. Defendant says that such remedy provided by the Law of Delaware, being special and exclusive, the present action against defendant cannot be maintained, defendant having been a resident of the State of New Jersey at the time of the imposition of and the accrual of any liability upon defendant, and now being a resident of the State of New Jersey.

NINTH SEPARATE DEFENSE.

1. Defendant says that under the Laws of Delaware, i. e., Chapter 65 "Revised Code of Delaware, Relating to Corporations" Sections 5, 20, 50 and 51, the liability of stockholders for unpaid subscriptions is for the direct benefit of the creditors of the corporation, and is in no sense an asset of the corporation, and that the

trustee in bankruptcy has no power or right to enforce such liability, and defendant says that the said Trustee in Bankruptcy has no interest in the subject matter of the litigation and no interest to bring this suit.

OBJECTION IN POINT OF LAW.

1. Defendant will object and reserve the right to move to strike the complaint upon the ground that said complaint does not set forth facts sufficient to constitute a cause of action, and upon the ground that under the provisions of Chapter 50 of the Laws of 1897, this suit cannot be maintained.

MERRITT LANE,
Attorney for Defendant.

Filed November 22, 1927.

AMENDMENT TO ANSWER.

Filed March 30, 1928.

NEW JERSEY SUPREME COURT.

Rider A [Amendment to Answer.]

"Add to the 6th paragraph of the answer the following:

And defendant further shows that to give the order referred to in the 6th paragraph of the complaint any effect other than as a finding that so much money was needed for the liquidation of the debts of the insolvent corporation, would be to deprive the defendant of property without due process of law within the meaning of the Fifth and Fourteenth Amendments of the Constitution of the United States and would be to violate the rights secured to defendant by paragraph 1 of Article 1 of the Constitution of the State of New Jersey, which secures to defendant the right to acquire, possess and protect property, and would be to deprive defendant of the right to a trial by jury within the meaning of Paragraph 7 of Article 1 of the Constitution of the State of New Jersey and within the meaning of Article 7 of the Amendments to the Constitution of the United States and would be to violate the right of a trial by jury provided for by paragraph 2 of Article 1 of the Constitution of the State of New York, which reads as follows:

> 'Trial by jury in all cases in which it has been heretofore used shall remain inviolate therefor; but a jury trial may be waived by the parties in civil cases in the manner to be prescribed by law.'

And would be to deprive the defendant of property without due process of law within the meaning of Section 6 of Article 1 of the Constitution of the State of New York which, so far as applicable, reads as follows:

> 'No person shall be held to answer for * * *; nor be deprived of life, liberty or property without due process of law.' "

paid in, and the assets shall be insufficient to

trustee in bankruptcy has no power or right to enforce such liability, and defendant says that the said Trustee in Bankruptcy has no interest in the subject matter of the litigation and no in-

AMENDMENT TO ANSWER.

Filed March 30, 1928.

NEW JERSEY SUPREME COURT.

ESSEX CIRCUIT.

JAMES G. GRAHAM, Trustee in Bankruptcy of Maxim Corporation, *Plaintiff,* *vs.* CHRISTIAN FLEISSNER, *Defendant.*	*Amendment to Answer.*

Rider A.

Substitute for the fifth separate defense the following:

FIFTH SEPARATE DEFENSE.

1. Defendant says that under the laws of Delaware, under which said corporation was incorporated, and under the certificate of incorporation stockholders are not liable for payment of corporate debts except to the extent of the unpaid balance of subscription.

2. Defendant says that he was not a subscriber to the capital stock of said corporation.

3. Defendant pleads the following provisions of the law of Delaware with respect to the matters aforesaid, i. e., Section 20 of Chapter 65 of the Revised Code of Delaware relating to corporations, which reads as follows:

> Section 20: Stockholders, Liability for Part Paid for Stock: When the whole capital stock of a corporation shall not have been paid in, and the assets shall be insufficient to

satisfy the claims of its creditors, each stockholder shall be bound to pay on each share held by him the sum necessary to complete the amount of the par value of such share as fixed by the charter of the company or its certificate of incorporation, or such portion of that sum as shall be required to satisfy the debts of the company; in the case of stock without par value, this liability shall be limited to the unpaid balance of the consideration for which stock was issued by the corporation, which said sum or proportion thereof may be recovered as provided for in Section 49 of this Chapter, after a writ of execution against the corporation has been returned unsatisfied as provided for in Section 51 of this Chapter.

and paragraph 7 of Section 5 of Chapter 65 of the Revised Code of Delaware relating to corporations, which reads as follows:

Section 5, Par. 7: Whether the private property of the stockholders shall be subject to the payments of corporate debts, and if so, to what extent.

Substitute for the sixth separate defense the following:

SIXTH SEPARATE DEFENSE.

1. Defendant says that under the law of Delaware, i. e., Sections 50 and 51 of Chapter 65 of the Revised Code of Delaware relating to corporation, which reads as follows:

Section 50. Action against Corporation for Debt Paid: When an officer, director or stockholder shall pay any debt of a corporation for which he is made liable by the

provision of this Chapter, he may recover the amount so paid in an action against the corporation for money paid for its use, and in which action only the property of the corporation shall be liable to be taken, and not the property of any stockholder.

Section 51. No Suit Against Director or Stockholder Until Judgment Against Corporation: No suit shall be brought against any director or stockholder for any debt of a corporation organized as aforesaid, of which he is such director or stockholder, until judgment be obtained therefor against such corporation and execution thereof returned unsatisfied.

which defendant pleads unpaid subscriptions can only be recovered after a judgment has been paid against the corporation and execution returned unsatisfied; and defendant says that no judgment was obtained against the corporation and execution returned unsatisfied.

Add another Separate Defense, entitled:

TENTH SEPARATE DEFENSE.

1. The stock referred to in the complaint as having been held by defendant was stock issued for property and was issued as full paid stock and non-assessable and carried on its face a statement to that effect.

2. The law of Delaware provides, Section 14 of Chapter 65 of the Revised Code of Delaware relating to corporations, which reads as follows:

Section 14. Issuance of Stock for Labor or Real or Personal Property: Subscrip-

tions to, or purchase of, the capital stock of any corporation organized or to be organized under any law of this State shall be paid for, wholly or partly by cash, by labor done, by personal property or by real property or leases thereof; and the stock so issued shall be declared and taken to be full paid stock and not liable to any further call, nor shall the holder thereof be liable for any further demands under the provisions of this Chapter. And in the absence of actual fraud in the transaction, the judgment of the directors, as to the value of such labor, property, real estate or leases, shall be conclusive.

3. The value of the property which was transferred as the consideration for the issuance of stock was fixed by the judgment of the board of directors at the amount of the par of the stock issued for it, including the stock alleged to have been held by defendant and there was no actual fraud.

MERRITT LANE,
Attorney of Defendant.

Filed March 30, 1928.

RULE.

Filed January 31, 1928.

NEW JERSEY SUPREME COURT.

JAMES G. GRAHAM, Trustee in Bankruptcy of Maxim Corporation, *Plaintiff,* *vs.* CHRISTIAN FLEISSNER, *Defendant.*	*Action at Law.* *On Motion Addressed to Answer.* *Rule.*

The plaintiff having given notice of a motion to strike out the third separate defense in the answer on the ground that the same states no defense to the action, and to strike out the seventh separate defense on the ground that the same constitutes no defense to the action, in that, among other things:

a. The defendant by the allegations in the seventh separate defense has not brought himself within the provisions of Chapter 50 of the Laws of 1897; and

b. Chapter 50 of the Laws of 1897 of the State of New Jersey, approved March 30, 1897, is repugnant to the Constitution and Laws of the United States of America, and in particular to the Bankruptcy Act of 1898 and amendments; and to Article I, Section 8 of the Constitution of the United States, and in particular to that portion thereof which empowers the Congress to establish uniform laws on the subject of bankruptcy throughout the United States; and to Article III, Section 2, and to Article IV, Section

Rule.

1, and in particular to that portion thereof which provides that full faith and credit shall be given in each State to the public acts, records and judicial proceedings of every other State; and to Article IV, Section 2, and in particular to that portion thereof which provides that the citizens of each State shall be entitled to all privileges and immunities of citizens in the several States; and to Article VI, and to Section 1 of the Fourteenth Amendment; and in particular to that part thereof which provides that no State shall make or enforce laws which shall abridge the privileges or immunities of the citizens of the United States:

And the Court having heard counsel for and against the said motion; it is, on this 28th day of January, 1928,

ORDERED as follows:

1. That the third defense be and it hereby is stricken out.

2. That the motion addressed to the seventh defense stand over until the trial of the action.

Let the foregoing rule be entered.

WM. S. GUMMERE,
C. J.

Entered January 31, 1928.

On motion of

McCARTER & ENGLISH,
Attorneys.

Filed January 31, 1928.

REPLY.

Filed November 13, 1928.

NEW JERSEY SUPREME COURT.

JAMES G. GRAHAM, Trustee in Bankruptcy of Maxim Corporation, *Plaintiff,* *vs.* CHRISTIAN FLEISSNER, *Defendant.*	*Action at Law.* *Reply.*

The plaintiff, replying to the answer of the defendant, says:

REPLY TO PARAGRAPH FIFTH OF THE ANSWER:

The plaintiff denies that the defendant never received any notice of such proceedings and says that the defendant was and had been a party to the proceedings and had appeared therein.

REPLY TO PARAGRAPH SIXTH OF THE ANSWER AS AMENDED:

The plaintiff denies that to give the order referred to in the sixth paragraph of the complaint the effect claimed for it in the complaint would be either to deprive the defendant of property without due process of law within the meaning of the Fifth or Fourteenth Amendments of the Constitution of the United States, or would be to violate the rights secured to the defendant by paragraph 1 of Article I of the Constitution of New Jersey, or would be to deprive the defendant of the right to a trial by jury within the

meaning of paragraph 7 of Article I of the Constitution of New Jersey or within the meaning of Article VII of the Amendments to the Constitution of the United States.

REPLY TO SECOND SEPARATE DEFENSE:

The plaintiff denies the truth of the matters in the said defense alleged.

REPLY TO FOURTH SEPARATE DEFENSE:

The plaintiff says that the cause of action against the defendant accrued within six years before the commencement of this action.

REPLY TO FIFTH SEPARATE DEFENSE, AS AMENDED:

1. The plaintiff denies paragraph 1 of the said defense.

2. The plaintiff denies paragraph 3 of the said defense.

REPLY TO SIXTH SEPARATE DEFENSE AS AMENDED:

The plaintiff denies the truth of the matters in the said defense alleged, except that the plaintiff admits that no judgment was obtained against the corporation and execution returned unsatisfied.

FIRST REPLY TO SEVENTH SEPARATE DEFENSE:

The plaintiff will object at the trial that the seventh separate defense states no defense to the action because:

Reply.

(a) The defendant by the allegations in the seventh separate defense has not brought himself within the provisions of Chapter 50 of the Laws of 1897.

(b) Chapter 50 of the Laws of 1897 of the State of New Jersey, approved March 30, 1897, is repugnant to the Constitution and Laws of the United States of America, and in particular to the Bankruptcy Act of 1898 and amendments; and to Article I, Section 8 of the Constitution of the United States, and in particular that portion thereof which empowers the Congress to establish uniform laws on the subject of bankruptcy throughout the United States; and to Article IV, Section 2, and in particular to that portion thereof which provides that the citizens of each State shall be entitled to all privileges and immunities of citizens in the several States; and to Section 1 of the Fourteenth Amendment, and in particular to that part thereof which provides that no State shall make or enforce laws which shall abridge the privileges or immunities of the citizens of the United States.

SECOND REPLY TO SEVENTH SEPARATE DEFENSE:

The plaintiff denies that the purpose of this suit is to enforce a statutory personal liability of the defendant as stockholder, within the true intent and meaning of said Act alleged in the seventh separate defense.

REPLY TO EIGHTH SEPARATE DEFENSE:

The plaintiff denies the truth of the matters in the said defense alleged.

Reply.

REPLY TO NINTH SEPARATE DEFENSE:

The plaintiff denies the truth of the matters in the said defense alleged.

REPLY TO TENTH SEPARATE DEFENSE:

1. The plaintiff denies that the pretended considerations for which said stock was issued were property.

2. The plaintiff denies the truth of the matters in paragraph 2 of the said defense alleged.

3. The plaintiff denies the truth of the matters in paragraph 3 of the said defense alleged.

McCARTER & ENGLISH,
Attorneys of Plaintiff.

Filed November 13, 1928.

RULE FOR REVIVOR.

Filed February 16, 1929.

NEW JERSEY SUPREME COURT.

ESSEX.

JAMES G. GRAHAM, Trustee in Bankruptcy of Maxim Corporation, *Plaintiff,* *vs.* CHRISTIAN FLEISSNER, *Defendant.*	*Action at Law.* *Rule for Revivor.*

It appearing to the Court by affidavit filed that Christian Fleissner, the sole defendant, has heretofore, on December 31, 1928, departed this life, and that letters testamentary have issued to Theresa Louisa Fleissner, Christian Fleissner, Jr., and Fidelity Union Trust Company, the executors named in the last will and testament of the said Christian Fleissner, deceased; and it appearing to the Court from an inspection of the pleadings that this action is one which might originally be maintained against the executors or administrators of the defendant; and due notice of this application having been given: It is, on this 16th day of February, 1929, on motion of Messrs. McCarter & English, attorneys of the plaintiff, ORDERED as follows:

1. The death of the sole defendant, Christian Fleissner, be suggested upon the record, and the names of Theresa Louisa Fleissner, Christian Fleissner, Jr. and Fidelity Union Trust Company, as executors of the last will and testament of

Christian Fleissner, deceased, be entered upon the record as defendants.

2. The action proceed at the suit of the plaintiff against the said Theresa Louisa Fleissner, Christian Fleissner, Jr. and Fidelity Union Trust Company, as executors of the last will and testament of Christian Fleissner, deceased.

3. A copy of this rule, which may be certified to be a true copy by the attorneys of the plaintiff, be served upon Merritt Lane, Esquire, attorney of the former defendant, now deceased, and upon any one of the said executors, within ten days from the date hereof.

Let the foregoing rule be entered.

WM. S. GUMMERE,
C. J.

Rule entered February 16, 1929.

On motion of

McCarter & English,
Attorneys.

Filed February 16, 1929.

POSTEA.

Filed May 2, 1929.

NEW JERSEY SUPREME COURT.

ESSEX COUNTY.

JAMES G. GRAHAM, Trustee in Bankruptcy of Maxim Corporation, *Plaintiff,* vs. CHRISTIAN FLEISSNER, *Defendant.*	*Action at Law.* *Postea.*

This action having been, by the Justice of the New Jersey Supreme Court holding the Essex Circuit, referred to the Honorable Nelson Y. Dungan, Circuit Court Judge, for trial, came on for trial before his Honor Judge Dungan and a jury on the 22nd, 23rd and 24th days of April, 1929, and resulted in a verdict in favor of the plaintiff, James G. Graham, Trustee in Bankruptcy of Maxim Corporation, and against the defendant, Theresa Fleissner, Christian Fleissner, Jr. and the Fidelity Union Trust Company, as executors of the last will and testament of Christian Fleissner, deceased, for the sum of $22,662.16.

NELSON Y. DUNGAN,
Circuit Court Judge.

Filed May 2, 1929.

JUDGMENT.

Entered May 2, 1929.

NEW JERSEY SUPREME COURT.

10	JAMES G. GRAHAM, Trustee in Bankruptcy of Maxim Corporation, *Plaintiff,* *vs.* THERESA LOUISA FLEISSNER, CHRISTIAN FLEISSNER, JR., and FIDELITY UNION TRUST COMPANY, as Executors of the Last Will and Testament of Christian Fleissner, deceased, *Defendants.*	*Action at Law.* *On Postea.*

McCarter & English, attorneys.

Judgment entered this second day of May, A. D. nineteen hundred and twenty-nine, in favor of plaintiff and against the defendants for the sum of twenty-two thousand six hundred and sixty-two dollars and sixteen cents damages and seventy dollars and forty-eight cents costs.

30	$22,662.16
	70.48
	$22,732.64

WM. S. GUMMERE,
C. J.

40

NOTICE AND GROUNDS OF APPEAL.

NEW JERSEY SUPREME COURT.

ESSEX COUNTY.

JAMES G. GRAHAM, Trustee in Bankruptcy of Maxim Corporation, *Plaintiff,* *vs.* THERESA LOUISE FLEISSNER, CHRISTIAN FLEISSNER, JR. and FIDELITY UNION TRUST COMPANY, as Executors of the Last Will and Testament of Christian Fleissner, deceased, *Defendants.*	*Notice and Grounds of Appeal.*

To McCarter & English, attorneys of plaintiff:

TAKE NOTICE, that the defendants appeal to the Court of Errors and Appeals in the last resort in all causes in New Jersey from the whole of the judgment entered in favor of the plaintiff in this cause and against the defendants upon the following grounds:

1. The Court erroneously denied defendants' motion to strike out the complaint under the provisions of the statute of the State of New Jersey entitled, "A supplement to an act entitled 'An Act concerning corporations' (Revision of 1896), approved April 21, 1896," approved March 30, 1897, Chapter 50, P. L. 1897, p. 124.

2. The Court erroneously struck out the Seventh Separate Defense of the defendants' answer.

3. The Court erred in overruling defendants' objection in point of law to the complaint reserved in defendants' answer.

4. The Court erroneously denied defendants' motion for a non-suit.

5. The Court erred in denying defendants' motion for a direction of a verdict for defendants.

6. The Court erroneously refused to charge the jury as requested in defendants' fourth request to charge as follows:

> "4. If you find that the defendant purchased his stock without actual notice of the fact that the property for which the stock was originally issued was grossly overvalued at the time of his purchase, then you must find for the defendant."

7. The Court erroneously refused to charge the jury as requested in defendants' seventh request to charge as follows:

> "7. Even if you find that the defendant had actual knowledge of the fact that the stock which he purchased from Theodore Palmer was originally issued to the promoters in return for property at a gross overvaluation, or notice of such facts as would put a reasonable man on inquiry, the defendant is not liable for any assessment on any shares so purchased by him which he later sold and which were actually transferred on the books of the company prior to the time that the company was decreed insolvent in the bankruptcy proceedings in the United States District Court for the Southern District of New York."

8. The Court erroneously refused to charge the jury as requested in defendants' eighth request to charge as follows:

> "8. In determining whether the defendant's shares or any part of them were transferred out of his name on the books of the company, you must consider the transfer sheets and ledger sheets which are in evidence and marked Exhibits P. 35 and P. 37-1."

9. The Court erroneously refused to charge the jury as requested in defendants' tenth request to charge as follows:

> "10. In determining the number of shares purchased by the defendant from Theodore Palmer for which the assessment is asked by the plaintiff, you must deduct those shares which he sold for the benefit of the company and the proceeds of which he loaned to the company."

10. The Court erroneously refused to charge the jury as requested in defendants' eleventh request to charge as follows:

> "11. The defendant cannot be assessed on those shares of stock which he originally purchased from Theodore Palmer but which you find under the evidence he subsequently sold or permitted to be sold for the benefit of the company lending the proceeds to the company in return for its notes where the transfers of the shares so sold were made on the books of the company prior to the decree of insolvency in the bankruptcy proceedings."

11. The Court erroneously refused to charge the jury as requested in defendants' thirteenth request to charge as follows:

> "13. The defendant cannot be held liable for any assessment for any shares of stock which he purchased from Theodore Palmer

but which were never transferred into his name on the books of the company."

12. The Court erroneously refused to charge the jury as requested in defendants' fourteenth request to charge as follows:

"14. The defendant cannot be held liable for any assessment on any of the shares of stock which he purchased from Theodore Palmer but which subsequently he returned to the treasury of the company prior to the decree of insolvency in the United States District Court for the Southern District of New York."

13. The Court erroneously refused to charge the jury as requested in defendants' fifteenth request to charge as follows:

"15. The order for assessment made in the bankruptcy proceedings in the United States District Court for the Southern District of New York is not conclusive and binding upon the defendant upon the question of whether or not the stock was full paid and non-assessable."

14. The Court erroneously refused to charge the jury as requested in defendants' sixteenth request to charge as follows:

"16. The order for assessment made in the bankruptcy proceedings in the United States District Court for the Southern District of New York is not conclusive and binding upon the defendant upon the question of whether or not the stock was originally issued by the company at a gross or fraudulent overvaluation by the directors, or whether the defendant had notice of such overvaluation."

15. The Court erroneously refused to charge the jury as requested in defendants' seventeenth request to charge as follows:

"17. The order for assessment made in the bankruptcy proceedings in the United

States District Court for the Southern District of New York is not conclusive or binding upon the defendant as to the number of shares for which the defendant can be assessed."

16. The Court erroneously refused to charge the jury as requested in defendants' nineteenth request to charge as follows:

"19. If you find that the defendant sold the shares of stock which he purchased from Theodore Palmer and that these shares of stock were transferred to the purchaser or purchasers on the books of the company prior to the decree of insolvency made in the United States District Court for the Southern District of New York, then you must find for the defendant notwithstanding the order for assessment made in the District Court."

17. The Court erroneously charged the jury in the following language:

"From the evidence in this case it appears that the 6375 shares were transferred to Mr. Fleissner in December 1916 and that he continued to hold that stock until some time in 1917."

18. The Court erroneously charged the jury in the following language:

"So notwithstanding the fact that when this stock was issued to Mr. Sweeney the directors of the corporation declared that it was issued full-paid for the property purchased, if as a matter of fact it was not fully paid, but there was such a gross discrepancy between the par value and the property which was received for that stock as to amount to a fraud, that even though the company itself, had it been successful, could never have gone to its stockholders and collected the difference, yet if the company failed and was not a success and there were creditors to pay whom the assets of the com-

pany were not sufficient, then those creditors or any person or corporation which represented those creditors might collect any deficiency in the payment of that stock up to its full par value."

19. The Court erroneously charged the jury in the following language:

"It has been decided by a number of decisions in the Federal and State courts that the court which has the authority to levy such an assessment (and I charge you that the bankruptcy court has the power to levy the assessment in this case) may take into consideration and should take into consideration in their decision of the matter all matters which are general to all the stockholders, and that after the assessment has been levied the only defenses which can be interposed are those defenses which are peculiar to the individual himself who is being sued for the assessment; and that is substantially stated in the order of the referee in bankruptcy."

20. The Court erroneously charged the jury in the following language:

"Two principal defenses are suggested in this suit only which are personal. I say 'suggested.' I mean suggested by what has taken place in this trial or suggested by the evidence, which are purely personal to Mr. Fleissner, or since his death to his representatives, who stand in his shoes in this case; and one is that he paid full value for the stock and the other is that he had no notice of the assessment against him or of the proceedings which resulted in the assessment against him."

21. The Court erroneously when the witness, Benjamin F. Taylor, was on the stand permitted an answer to the following question: "Q Mr. Taylor, I show you a document signed by J. H. Brown and ask you to tell me what that is,

please?'' and permitted, over objection, a line of testimony upon the same subject then under discussion relating to the assets transferred to the Maxim Munitions Corporation in consideration for the issue of its stock and the value of these assets from this witness.

22. The Court erroneously when the witness, Benjamin F. Taylor, was on the stand permitted an answer to the following question: ''Q What was that arrangement, Mr. Taylor?''

23. The Court erroneously when the witness, Herbert W. Oviatt, was on the stand permitted an answer to the following question: ''Q Can you tell us, in your opinion, Mr. Oviatt, what the land and buildings were worth, the fair market value, on or about September 4, 1915?'' and permitted, over objection, a line of testimony upon the same subject then under discussion.

24. The Court erroneously when the witness, Henry F. Kurtz, was on the stand permitted an answer to the following question: ''Q I ask you, then, is this a new invention or not?'' and permitted, over objection, a line of testimony upon the same subject then under discussion.

25. The Court erroneously when the witness, Harry A. Strachan, was on the stand permitted an answer to the following question: ''Q Now, will you state what, in your opinion, was the fair market value of the machinery, equipment and tools listed in the deed, Exhibit P. 20, other than the equipment described at the middle of page 6 of the deed beginning with the words 'One, two-hundred horsepower Heine Return Tubular Boiler' and ending with the words 'suspended near roof in middle stairway,' and also except one hydraulic elevator dismantled, six by

six hydraulic Deane elevator, such valuation being as of the fall of 1915?'' and permitted, over objection, a line of testimony upon the same subject then under discussion.

26. The Court erroneously when the witness, Logan Cresap, was on the stand, permitted an answer to the following question: ''Q What have you to say, Commander, as to the practical utility of that invention described in that patent, for Naval purposes?'' and permitted, over objection, a line of testimony upon the same subject then under discussion.

27. The Court erroneously when the witness, Herbert H. Thompson, was on the stand, permitted an answer to the following question: ''Q I merely want to ask you to state the conditions as to the prior art of the two inventions described in those patents,'' and permitted, over objection, a line of testimony upon the same subject then under discussion.

28. The Court erroneously when the witness, Colonel Rogers Bernie, was on the stand, permitted an answer to the following question: ''Q What have you to say, Colonel, as to the practical utility of that gun for Army purposes?'' and permitted, over objection, a line of testimony upon the same subject then under discussion.

29. The Court erroneously admitted in evidence the syndicate agreement dated February 10, 1916, marked Exhibit P. 29.

30. The Court erroneously admitted in evidence pages 6, 8 and 12 of the cash book, marked Exhibit P. 31.

31. The Court erroneously admitted in evidence the transfer sheets of the United States

Corporation Company relative to stock of the Maxim Corporation, marked Exhibit P. 35.

32. The Court erroneously admitted in evidence a certified copy of the adjudication in bankruptcy in the United States District Court for the Southern District of New York, marked Exhibit P. 51.

33. The Court erroneously admitted in evidence copy of the order of reference of the bankruptcy proceedings against Maxim Corporation in the United States District Court for the Southern District of New York, marked Exhibit P. 52.

34. The Court erroneously admitted in evidence a copy of the petition for assessment of stock in the Maxim Corporation bankruptcy proceedings, marked Exhibit P. 53.

35. The Court erroneously admitted in evidence a copy of the order to show cause in the bankruptcy proceedings against Maxim Corporation, marked Exhibit P. 54.

36. The Court erroneously admitted in evidence copies of answers filed by several respondents to petition for assessment in bankruptcy proceedings, marked Exhibit P. 55.

37. The Court erroneously admitted in evidence a copy of the order levying the assessment in the bankruptcy proceedings against Maxim Corporation, marked Exhibit P. 56.

38. The Court erroneously when the witness, Benjamin F. Taylor, was on the stand permitted an answer to the following question: "Q Now, Mr. Taylor, I note in Exhibit P. 3, which is the minutes of the directors' meeting authorizing the acceptance of Mr. Sweeney's offer, there is this

recital: 'After full and lengthy consideration and discussion among the members of the Board of Directors as to the value of and advisability of accepting Mr. Sweeney's offer, the following resolution was adopted.' Was there any full and lengthy consideration and discussion among the members?'' and permitted, over objection, a line of testimony upon the same subject then under discussion.

39. The Court erroneously admitted in evidence the following exhibits relating to the issue of its capital stock and to the consideration received by the company therefor: Assignment from Sweeney to company in Brown Machine rifle, Exhibit P. 6; Further Assignment Sweeney to company, Exhibit P. 7; Agreement between Fuller Mfg. Co. and Maxim Munitions Co., Exhibit P. 8; Agreement between Maxim Munitions Co. and Hudson Maxim, Exhibit P. 9; Agreement between Maxim Munitions Co. and Hudson Maxim, Exhibit P. 10; pages 52 and 53 of Minute Book, Exhibit P. 11; pages 60 and 61 of Minute Book, Exhibit P. 12; page 78 of Minute Book, Exhibit P. 13; Letters Patent No. 1,228,827, Exhibit P. 14; Model of Rifle, Exhibit P. 15; Letter from J. H. Brown, Exhibit P. 16; Copy of Letter from Maxim Munitions Corp. to J. H. Brown, Exhibit P. 17; Letter from Maxim Munitions Corp. to U. S. Mortgage and Trust Company, Exhibit P. 18; page 66 of Minute Book, Exhibit P. 19; Deed Fuller Mfg. Co. to Maxim Munitions Co., Exhibit P. 20; Map of Fuller Plant, Exhibit P. 21; Letter from Sweeney to Taylor, Exhibit P. 22; page 55 of Minute Book, Exhibit P. 23; Document signed by Scully, Exhibit P. 24; Balance Sheet of December 31, 1915, Exhibit P. 25; Trial Sheet of December 31, 1915, Exhibit P. 26;

Trial Balance, Exhibit P. 27; page 31 of Maxim Munitions Co. Ledger, Exhibit P. 28; File, etc. of Patent Application of Hudson Maxim, Exhibit P. 33; File, etc. of Patent Application of Hudson Maxim, Exhibit P. 34; Letter from Hudson Maxim, Exhibit P. 48; U. S. Letters Patent, No. 1,031,279, Exhibit P. 60; U. S. Letters Patent, No. 1,310,200, Exhibit P. 61; U. S. Letters Patent No. 1,310,201, Exhibit P. 62.

40. The judgment of the Court was erroneous in that it was based upon an assessment and order levying assessment made by the United States District Court for the Southern District of New York against Christian Fleissner in the bankruptcy proceedings against Maxim Corporation, which assessment and order levying assessment were invalid in that they denied to Christian Fleissner his constitutional right to trial by jury.

41. The judgment of the Court was erroneous in that it was based upon an assessment and an order levying assessment made by the United States District Court for the Southern District of New York against Christian Fleissner in the bankruptcy proceedings against Maxim Corporation, which assessment and order levying assessment were invalid in that they deprived Christion Fleissner of his property without due process of law.

42. The Court erred in giving effect to the assessment and order levying assessment made by the United States District Court for the Southern District of New York against Christian Fleissner in the bankruptcy proceedings against Maxim Corporation in that said assessment and order levying assessment were invalid in that

they denied to Christian Fleissner his constitutional right to trial by jury.

43. The Court erred in giving effect to the assessment and order levying assessment made by the United States District Court for the Southern District of New York against Christian Fleissner in the bankruptcy proceedings against Maxim Corporation in that said assessment and order levying assessment were invalid in that they deprived Christian Fleissner of his property without due process of law.

PITNEY, HARDIN & SKINNER,
Attorneys for Defendants.

Service of the within Notice and Grounds of Appeal are hereby acknowledged this 28th day of January, 1930.

McCARTER & ENGLISH,
Attorneys of Plaintiff.

NEW JERSEY SUPREME COURT,
ESSEX CIRCUIT.

April 22, 1929.

JAMES G. GRAHAM, Trustee in Bankruptcy of Maxim Corporation, *Plaintiff,* *vs.* THERESA LOUISE FLEISSNER, CHRISTIAN FLEISSNER, JR., and FIDELITY UNION TRUST COMPANY, Executors of the Last Will and Testament of Christian Fleissner, deceased, *Defendants.*	*Action at Law.*

Before Hon. Nelson Y. Dungan, *J.*, and a jury.

For the plaintiff appear McCarter & English (by George W. C. McCarter) and Ralph Montgomery Arkush.

For the defendants appears Merritt Lane (by Carl A. Feick).

Mr. Feick: If the Court please, this suit is brought to recover the personal liability of a stockholder to a Delaware corporation under the corporation laws of the State of Delaware. We have a statute here, P. L. 1897, Chapter 50, which provides as follows at page 124; Section 2: "No action or proceeding shall be maintained in any court of law of this State against any stockholder, officer or director of any domestic or foreign corporation by or on behalf of any credi-

tor of such corporation to enforce any statutory personal liability of such stockholder, officer or director for or upon any debt, default or obligation of such corporation, whether such statutory personal liability be deemed penal or contractual, if such statutory personal liability be created by or arise from the statutes or laws of any other state or foreign country, and no pending or future action or proceeding to enforce any such statutory or personal liability shall be maintained in any court of this State other than in a nature of an equitable accounting for the proportionate benefit of all parties interested, to which such corporation and its legal representatives, if any, and all its creditors and all of its stockholders shall be necessary parties."

The Court: Have you pleaded that statute?

Mr. Feick: Yes, sir. It is reserved as an objection on a point of law.

The Court: You see the pleadings are quite long. I have not had an opportunity to read them.

Mr. Feick: It is an objection on a point of law, sir, and it is also a pleading.

(Counsel argue.)

Mr. McCarter: It is true that this statute is one of the very important questions in this case. Mr. Lane, who was the attorney of record in this case, pleaded it specifically as a defense to the action. The seventh separate defense is this statute. I moved before the Chief Justice on motion to strike out that defense for certain reasons.

The Court: I see he held it.

Mr. McCarter: He held it till now. In answering Mr. Feick I will say that I at the same

time am renewing my motion now to strike out the seventh separate defense. The grounds for my motion are the following—

The Court: Both involve the same question?

Mr. McCarter: Both involve exactly the same question.

I say that the statute in question properly construed does not apply to this proceeding.

Secondly, I say that if the statute did apply, by its terms such application would be unconstitutional under the Constitution of the United States, and would be repugnant to the Bankruptcy Act of 1898 and its amendments; to Article I, Section 8 of the Constitution of the United States, and in particular that portion thereof which empowers Congress to establish uniform laws on the subject of bankruptcy throughout the United States; and under Article IV, Section 2, and in particular that portion thereof which provides that the citizens of each state shall be entitled to all privileges and immunities of citizens in the several states; and Section 1 of the Fourteenth Amendment of the Constitution of the United States, and in particular that part thereof which provides that no state shall make or enforce laws which shall breach the privileges or immunities of the citizens of the United States; under Article III, Section 2, under Article IV, Section 1 of the Constitution of the United States, and in particular that portion thereof which provides that full faith and credit shall be given in each state to the public acts, records and judicial proceedings of every other state; and to Article VI of the Federal Constitution.

(Counsel argue.)

The Court: As I understand from the arguments in this case as to matters about which there is no dispute, the plaintiff is the trustee in bankruptcy of the Maxim Corporation. If I make any mistake counsel may interrupt me at any time. The Maxim Corporation is a corporation of the State of Delaware. This corporation by proceedings had in the United States Courts was adjudicated bankrupt, and the plaintiff in this case was named as the trustee. Proceedings were thereupon had in that court which resulted in determining that the stock of certain or perhaps all of that corporation was not fully paid and non-assessable. Those proceedings determined the equitable questions of the assets of the company, the debts of the company, the balance of obligations of the company which the assets would not pay, and proceeded to assess upon stockholders who had not paid fully for their stock their ratable proportion of the debts of the company which the assets would not pay. Thereupon this suit was brought at law to recover from the defendant in this case, or the testator of the defendant in this case, the amount which was assessed in the bankruptcy proceedings upon the stock held by him.

It is contended on behalf of the defendant, and motion is made to strike out the answer set up in the Seventh Defense, that by virtue of Section 2 of Chapter 50 of the Laws of 1897 the plaintiff cannot maintain an action against the defendant in a court of law, but that the proceeding if brought should be brought in the Court of Chancery. Several cases are cited, and the Court's attention has been called to the case of Johnson against Tennessee Oil Company, 74 Equity, page 33, at page 35, where Vice-

Chancellor Emery says that "The liability of the defendants as stockholders, to creditors of the company for their stock depends on the laws of Arizona (that is a case similar to this) subject as to parties and procedure to our own Act of 1897, requiring in such cases the suit for enforcing a statutory personal liability to be not an action at law, but a suit in equity for an accounting, to which the corporation and all the stockholders are parties."

This case was followed by the case of McDermott against Woodhouse, which is a decision of the Court of Errors and Appeals, the decision being written by Mr. Justice Swayze, which does not refer particularly to this statute and I think does not refer to this case. Does it? It does not refer to the Johnson case, does it?

Mr. Feick: I believe not, sir.

The Court: It does not specifically refer to this statute or this case of Johnson against the Tennessee Oil Company, but the circumstances of that case were much the same as the one involved here. He says in the next to last paragraph of that case, "Following that ruling (referring to a ruling in a case previously mentioned), the logic and justice of which we do not question, no suit can be maintained against the demurring defendant until the amount of liability has been ascertained by proceedings in New York." Then he adds, "When that liability has been ascertained, it must be enforced in a Court of Law," and I think we must assume that when he said that he had in mind of course the provisions of the 1897 statute.

This case was followed by one, again in the Court of Chancery, the Chicago Title & Trust Company against Young, decision by Vice-Chan-

cellor Stephenson, in which he says, "So far as appears from this case if the Court of Chancery of New Jersey had jurisdiction to conduct an accounting of the assets and liabilities of this Illinois Corporation, and to establish the amount of an assessment binding upon the stockholders wherever resident, this, according to the view expressed in McDermott against Woodhouse, would be the limit of the decree. The complainants, presumably through a receiver to be appointed in the cause, would be obliged to bring an action at law against the defendant executors in which action they (the defendants) would of course have the benefit of all their legal defenses.

"If a suit for an assessment in this case wherever conducted can result only in establishing a basis for an action at law, there seem to be no reasons of convenience for having such suit conducted in New Jersey. The propriety of having such suit conducted in Illinois where the United Company is domiciled, had all its assets, conducted all its business and where all its creditors apparently reside, is so obvious that any discussion on the subject is unnecessary,"—the point of which is that the establishment of liability should take place in the State of the domicile of the corporation, which was the State of Illinois. However, in a suit in bankruptcy in the Federal Courts there is no question, so far as this motion is concerned, of the jurisdiction of the Federal Courts to determine the liability of the defendant in this case in the way that has already been suggested—namely, by applying the equitable principles of the amount of debts of the corporation, the amount of liabilities of the corporation, having all of the

stockholders of the corporation before it for the purpose of determining the proportion for which each stockholder who had not paid the full amount for his stock should be liable in order to pay the balance of the debt, and to determine that fact, which seems to have been done, according to the pleadings in this case, by the bankruptcy court. The statute to which reference has been made and which it is insisted prevents this action it seems to me does not apply where that is the situation, or if it does apply, it contravenes the full faith and credit provison of the Federal Constitution. The result of these views is to deny the motion to strike out the complaint and to grant the motion to strike out the Seventh Defense. That will be the order of the Court and an exception to that ruling may be noted.

Defendant's counsel prays an exception to this ruling of the Court.

Exception noted as ground of appeal.

Mr. Feick: Your Honor spoke of the Seventh Defense in the answer raising this as a defense. Counsel also raised an objection as a point of law.

The Court: Yes.

Defendant's counsel prays an exception to this ruling of the Court.

Exception noted as ground of appeal.

(A jury is called and sworn.)

(Mr. McCarter opens for plaintiff.)

(Mr. Feick opens for defendants.)

Benjamin F. Taylor, direct.

BENJAMIN F. TAYLOR, sworn in behalf of the plaintiff.

Direct examination by Mr. McCarter.

Q Where do you live, Mr. Taylor? A Hornell, New York.

Q What is your occupation? A. Broker.

Q Were you ever connected with the Maxim Munitions Corporation? A Yes, sir.

Q In what capacity? A I was one of the incorporators of the company.

Q Were you on its Board of Directors at any time? A Yes, sir.

Q When? What period of time? A Starting in September of 1915, resigned from the company in June, as I remember it, 1917. I think it was June.

Q Were you also one of its officers? A Yes.

Q What office? A Secretary and assistant treasurer.

By the Court.

Q During that whole period? A No, sir. There was one time that I was made assistant secretary, I think. I resigned. I think I was moved from the secretaryship to assistant secretaryship.

Mr. McCarter: At this point I offer in evidence a copy of certificate of incorporation of Maxim Munitions Corporation, duly exemplified under the great seal of the State of Delaware.

The Court: It will be admitted.

(The same is received in evidence and marked Exhibit P. 1.)

Mr. McCarter: I also offer in evidence Chapter 65 of the Revised Code of Delaware of 1915, same being found at page 910 of this statute book, which on its title page is published by the authority of the General Assembly of the State of Delaware.

(The same is received in evidence and marked Exhibit P. 2.)

Q Did you ever have anything to do with the financial accounting and stock records of the company? A I did.

Q Who was its transfer agent and registrar? A United States Corporation Company.

Q And where is that company's place of business? A Around Wall street.

Q In New York City? A In New York City, yes.

By the Court.

Q What is that? A United States Corporation.

By Mr. McCarter.

Q United States Corporation Company. What did you do with the transferring and issuing of stock certificates, you yourself personally? A Well, I signed as officer and gave instructions to the Corporation Company as to the transfers.

Q Did that company follow your instructions? A It did.

Q What was the total authorized capital stock of the company? A One million shares.

Q Of what par value? A $10.

Q How much of this was issued at the time of the formation of the company? A Well, there were thirty-five shares issued on account

of the directors. The balance was all issued for consideration of Mr. Sweeney for what he turned in; Robert Sweeney.

Mr. Feick: If the Court please, it seems to me the corporate records is the best proof.

The Witness: Of course it is all a matter of record.

Q Were any of these original shares paid for in cash?

Mr. Feick: I object to that. The corporate records will show that.

The Court: Well, if he knows of his own knowledge I suppose he can testify.

Mr. Feick: It seems to me if they have the records they will show what they paid for the stock, instead of depending upon this man's recollection, which he says is fifteen years ago.

The Court: Well, I cannot say that he does not recollect.

Q (Read by stenographer.) Were any of these original shares paid for in cash? A Yes, thirty-five shares.

Q Do I understand that the remainder of the one million shares less those thirty-five were issued at the time of the formation of the company? A Yes.

By the Court.

Q To whom did you say; the balance were issued to whom? A Sweeney, Robert Sweeney.

Benjamin F. Taylor, direct.

By Mr. McCarter.

Q I show you a book which has on its cover, "Minute Book, Maxim Munitions Corporation," and ask you to look at it and tell me if you recognize that as the minute book of this Maxim Munitions Corporation. A I do.

Mr. McCarter: I offer in evidence the minute book of a directors' meeting of the Maxim Munitions Corporation, held at the office of the company, 52 Broadway, New York City, September 4, 1915, being found at pages 32 to 35 of the book just identified by the witness.

(The same is received in evidence and marked Exhibit P. 3.)

(Mr. McCarter reads Exhibit P. 3.)

Q You were present at that meeting? A Yes, sir.

Q I show you a letter on the letterhead of the Maxim Munitions Corporation dated September 3, 1915, and signed Robert Sweeney, and ask if that is the letter from Robert Sweeney referred to in the minutes which I have just read. A Yes, sir.

Mr. McCarter: I offer it in evidence.

(The same is received in evidence and marked Exhibit P. 4.)

Q I show you a letter dated August 26, 1915, addressed to Mr. Robert Sweeney, 56 Broadway, New York, New York, and signed Hudson Maxim, and ask you if that letter is the letter referred to in the letter of Mr. Sweeney. A Yes.

Q And is also among the letters referred to in the resolution which I read a few minutes ago, is that correct? A Yes.

Mr. McCarter: I offer this in evidence.

(The same is received in evidence and marked Exhibit P. 5.)

(Mr. McCarter reads Exhibits P. 4 and P. 5.)

(At one o'clock P. M. the Court takes a recess until two o'clock P. M.)

AFTER RECESS.

BENJAMIN F. TAYLOR, resumes the stand in behalf of plaintiff.

Direct examination (continued) by Mr. McCarter.

Q Mr. Taylor, I show you a document signed by J. H. Brown and ask you to tell me what that is, please. A That is his assignment of the Brown air-cooled shoulder machine rifle.

Q Mentioned in this letter to Mr. Sweeney? A Assigned to Mr. Sweeney.

Q I show you another document signed by Mr. Sweeney. What is that? A. It is his assignment to the Maxim Munitions Corporation of all his right, title and interest in the Brown air-cooled shoulder machine rifle.

Mr. McCarter: I offer in evidence the first document signed by Brown.

Mr. Feick: If your Honor please, apparently it is the intention of counsel to show what assets were transferred to the corporation. We contend that that is not one of the issues in this case. We say that the complaint must fall depending on the validity of the assignment made in New York. As your Honor ruled this morning on the motion to strike out the complaint, the statute you said did not apply in the case where the issues had been tried in another jurisdiction, so that there was no necessity in the law action of going into those questions. Now, apparently this Court is going to be asked to sit as a court of equity to determine whether or not there was valuation. That we say cannot be done in a court of law.

The Court: Do I understand from what you say, then, that you are willing to accept the decision of the bankruptcy court as to the amount of this assessment and to rely, as stated in your opening, upon the fact that Fleissner had no knowledge of the fact that this stock was not fully paid?

Mr. Feick: No, sir; that is not our position. We say that the bankruptcy decision in New York, in so far as it has adjudged that this stock was issued for over-valued property, is not binding on this defendant, on the deceased, on the ground that he was not served with process and that the Court had no jurisdiction to determine that fact, but so far as this proceeding is concerned in a court of law, as your Honor held this morning, the reason why the statute did not make it obligatory to bring it into equity

is that there has been another decision in another state making the assessment. The Court in Delaware said:

(Further argument.)

Mr. Feick: So my point is that if this Court is sitting as a court of law, as it is, that it cannot go into the question of fraud. If the question of fraud is taken up the statute of 1897 applies.

(Counsel argue.)

The Court: Treating what you said as an objection, it will be overruled, and an exception may be noted.

Defendant's counsel prays an exception to this ruling of the Court.

Exception noted as ground of appeal.

(The paper referred to is received in evidence and marked Exhibit P. 6.)

Mr. Feick: May I have the same objection to all this line of testimony without repeating it each time?

The Court: Well, I am just wondering if that is not a little dangerous. I am perfectly willing if it is strictly on this line to say yes. If it is something that goes outside of this line I am not prepared to say that my ruling would be the same, but I will say that any documents which are strictly along this line, which are offered in evidence, and any proof which is strictly on this line which comes under the objection that you have just made—it may be assumed that your objection goes to all of them.

Mr. McCarter: I offer in evidence the second assignment from Sweeney to Maxim Munitions Corporation.

(The same is received in evidence and marked Exhibit P. 7.)

Q Now, I show you, Mr. Taylor, document entitled, "Agreement between the Fuller Manufacturing Company and the Maxim Munitions Corporation," dated September 3, 1915, and ask you what that is. A This was an agreement to buy the Fuller plant in New Haven.

Mr. McCarter: I offer that in evidence.

(The same is received in evidence and marked Exhibit P. 8.)

Q Did the Maxim Munitions Corporation subsequently acquire the plant referred to and described in Exhibit P. 8? A They did.

Q Did it issue to Mr. Sweeney 9,999,965 shares of stock? A It did.

Q Was there any change or difference afterwards made in any of these contracts or agreements that we have identified here this morning, and I direct your attention particularly to the Maxim matter? A Yes, the Hudson Maxim contract was afterwards changed.

Q I show you a document dated September 9, 1915, purporting to be an agreement between the Maxim Munitions Corporation and Hudson Maxim and ask you if that is what it is. A Yes, that is the contract.

Q Which modified in certain respects— A His original letter, his proposal, whatever you would call it.

Mr. McCarter: I offer that in evidence.

(The same is received in evidence and marked Exhibit P. 9.)

The Court: The other one is Exhibit P. 5?

Mr. McCarter: Yes, P. 5 is the other one.

The Court: It modified Exhibit P. 5.

Q Now, I ask you whether that modification was itself subsequently modified? A It was.

Q I show you another contract between the same parties as the last exhibit, dated September 22, 1915, and ask you if that is the modification of the modification? A Yes, this is the modification.

Mr. McCarter: I offer that in evidence.

(The same is received in evidence and marked Exhibit P. 10.)

Mr. McCarter: Rather than read the whole exhibit, may I state to your Honor and the jury what the modification is?

The Court: Of the original, now?

Mr. McCarter: This first modification, the modification of the original, is the elimination of certain of the patents.

(Further discussion.)

Q Were these modifications, P. 9 and P. 10, actually carried into effect before the stock was issued to Mr. Sweeney? A Yes.

Q I show you pages 52 and 53 of the minute book, purporting to be a minute of the meetings of the Executive Committee of the Maxim Corporation. Were you present at that meeting? A I was there as secretary.

Q And were those resolutions then adopted? A They were.

The Court: What is the date?

Mr. McCarter: That is September 9, 1915. I offer that in evidence.

(The same are received in evidence and marked Exhibit P. 11.)

Q Now, I show you also another minute found on pages 60 and 61 of this book, being a minute of the meeting of the Executive Committee held September 30, 1915, and ask if you were present at that meeting? A Yes, I was there.

Mr. McCarter: I offer that in evidence.

(The same are received in evidence and marked Exhibit P. 12.)

Q Now, I direct your attention to page 78 of the minute book, special meeting of the directors of the company, held December 10, 1915, at ten o'clock, and ask you if you were present at that meeting? A Yes.

Mr. McCarter: This ratifies the Executive Committee's actions. I offer that in evidence.

(The same is received in evidence and marked Exhibit P. 13.)

Q What was the Brown air-cooled shoulder machine rifle, Mr. Taylor, that was referred to in Mr. Sweeney's letter of September 3rd, which is Exhibit P. 4? A That was a rifle which Mr. Brown was developing, which he claimed would be able to shoot about as fast as the ordinary machine gun, from the shoulder, and the rifle would weigh very little more than an ordinary rifle.

Q I show you next letters patent No. 1,228,827, the original, and ask you to look at that and tell

me if that is the patent on this instrument you have referred to as the Brown air-cooled shoulder machine rifle? A Yes.

Mr. McCarter: I offer that in evidence.

(The same is received in evidence and marked Exhibit P. 14.)

Q Why was Exhibit P. 14 taken out by Oliver Berry Saulfield instead of Mr. Brown? A Why, Mr. Brown died. Saulfield was his son-in-law.

Q Do you recognize this as being a model of the rifle?

Mr. Feick: If the Court please, my objection is being noted to this testimony, on the ground that it is not within the pleadings?

The Court: I do not suppose that the stenographer will note an objection to each question, but I stated if it is in the same category, one objection will be all that is necessary if they are strictly along the line of the document to which you made the objection.

Mr. Feick: Yes.

A Yes.

Mr. McCarter: I offer this in evidence.

(The same is received in evidence and marked Exhibit P. 15.)

Q Was that invention ever used by the company? Was it ever manufactured or sold? A No.

Q This gun which I have shown you is just a model? A That is all.

Q I show you a letter dated September 4, 1915, addressed to Maxim Corporation and signed apparently J. H. Brown. Tell me what that is, please? A He agreed to turn over to the company all his right, title and interest in this air-cooled shoulder rifle and he was to be appointed consulting engineer of the advisory board.

Q I wasn't asking you to give the contents. I will ask you another way. Is that a letter from Mr. Brown, who invented the rifle? A Yes, that is his signature.

Mr. McCarter: I offer that in evidence.

(The same is received in evidence and marked Exhibit P. 16.)

Q I show you a carbon copy of a letter addressed to J. H. Brown, Esq., 30 Church street, New York City, September 4, 1915, and ask you if that is a carbon copy of the company's answer to P. 16? A Yes.

Mr. McCarter: I offer that in evidence.

(The same is received in evidence and marked Exhibit P. 17.)

Q I show you a letter dated December 16, 1915, on the letterhead of the Maxim Corporation, addressed to the United States Mortgage & Trust Company, 55 Cedar street, New York, and signed apparently Robert Sweeney. Do you recall that letter? A Yes.

Q Was that delivered by Mr. Sweeney to the United States Mortgage & Trust Company? A It was sent to the United States Mortgage & Trust.

Mr. McCarter: I offer that in evidence.

(The same is received in evidence and marked Exhibit P. 18.)

Mr. McCarter: That, if your Honor please, is a letter addressed to the United States Mortgage & Trust Company, directing that company to deliver to John H. Brown upon the termination of the present escrow agreement or the termination of any subsequent escrow agreement that may be executed, by giving the stockholders 1,500 shares of the capital stock of the Maxim Corporation.

Q Mr. Taylor, in the letter Exhibit P. 4 there is a reference to the organization headed by Edward H. Beckert. Tell us about that, please. A Well, Beckert and Angel were contemplating the assembly of rifles.

Q Who was Beckert and who was Angel? A Captain Beckert was vice-president and general manager of the company, and Captain Angel was another vice-president of the company. Beckert was a West Point man, but Captain Angel was not a West Point man, but had served in the army at Porto Rico. They had these loose mechanical men who were available in case they started the manufacture of rifles—that is, mechanical experts, machinists, etc., down the line who would be available to come into their factory in case they were able to secure orders for rifles, so they could put them together.

Q Were those machinists, as you have described them, under any contract with Beckert? A No, he just knew where to find them. He knew their ability; that is all.

Q Names and addresses, is that all? A That is all.

Q Now, who were the original organizers of the Maxim Corporation, what group of men? A Well, Angel, Sweeney, Beckert, Maxim of course; and I was one of the incorporators.

By the Court.

Q Five incorporators? A No, there were seven directors all told.

By Mr. McCarter.

Q What was it you expected to do? What was the business of the corporation primarily to be? A We believed from all Mr. Maxim told us that he was going to be able to get a very large order for machine guns from the Russian Government. That really was the basis that inspired us to go ahead with the organization.

Q At the time of the directors' meeting of September 4, 1915, was there any understanding between Captain Beckert and Mr. Sweeney about the issuing of stock to Beckert? A Yes.

Q What? A Sweeney agreed to give Beckert 70,000 shares of stock, and an order was issued on the United States Mortgage & Trust Company to deliver it to him at the time the escrow agreement was ended.

Q And the understanding and agreement that Mr. Hudson Maxim referred to in a letter of September 3rd, Exhibit P. 4, is that set forth in Exhibit P. 5, or don't you recognize what P. 5 is? A I don't remember it by number. He was to get a certain amount of stock.

Q I am not asking you to tell them. I am asking whether Exhibit P. 5, which is the letter

from Hudson Maxim to Sweeney, which is the understanding and agreement between Maxim and Sweeney, is the agreement referred to in Sweeney's letter, Exhibit P. 4? A Oh, yes, it was.

Q Now, were the inventions mentioned in Schedule A attached to Mr. Maxim's letter, Exhibit P. 5, discussed at the directors' meeting? A No.

Q Did you ever hear of any successful invention of Hudson Maxim at that time? A Nothing except his powder.

Q Did he make any statement or explanation to you about the powder? A Yes, that when he came into the picture—that is, the Maxim Corporation—we could not make any explosives because he was under contract with the DuPont interests at Wilmington, to whom he had sold his smokeless powder patent.

Q Did he make any statement to you about his relationship with his brother, Sir Hiram Maxim? A Yes, he said they had been in a row since they were boys.

Q And who was Sir Hiram Maxim? A Sir Hiram was the inventor of the Maxim rapid fire gun.

Q Did Mr. Hudson Maxim make any statement about his ability to turn over to the company any Maxim machine gun patents or inventions? A No. He said that the important patents had all expired.

Q The agreement to pay $2,000,000 to the treasury of the company called for by paragraph 3 of Mr. Maxim's letter, Exhibit P. 5—was that ever carried out? A No, it was not.

Q What was done instead? A Why, Sweeney contributed 300,000 shares of his stock to the

treasurer, which was put in my name as assistant treasurer.

Q I now invite your attention to page 66 of the minute book of the company and the ensuing pages, and ask you if you were present at that meeting of the Executive Committee recorded as being held November 8, 1915? A Yes, I was there as secretary.

Mr. McCarter: I offer that in evidence.

(The same is received in evidence and marked Exhibit P. 19.)

Q Were the 93,996 shares of the company, called for by paragraph 4 of Mr. Maxim's letter, Exhibit P. 5, actually issued? A They were.

Q Were they deposited in escrow with the United States Mortgage & Trust Company? A They were.

Q Why were all these shares deposited in escrow, Mr. Taylor? What was the reason for that escrow agreement? A Well, the reason was we needed money and we didn't want a lot of loose stock coming on the market. We wanted to be able to dispose of our treasury stock without coming in competition with a lot of stock that was given for various purposes, like Mr. Maxim.

Q Were these 300,000 shares of treasury stock sold in the open market? A Part of them.

Q Were they offered for sale, all of them? A They were.

Q Do you recall through what broker or brokers they were sold? A Yes, J. Robinson Duff handled the principal amount of it.

Q Do you recall how long this stock that was escrowed remained in escrow? A I think until

the syndicate was formed, which would be early in 1916. That is my recollection of it.

Q How much of the original stock, the original issue other than this 300,000 treasury shares, was put in the escrow agreement? A Why, there was something like 600,000.

Q Referring again to Exhibit P. 5, Mr. Maxim's letter, do you recall whether or not payments called for by clause 8, paragraph 5, as afterwards modified by these modifying agreements, were ever paid to Mr. Maxim? A I don't think they were.

By the Court.

Q I do not understand that, any balance of those 600,000 shares which you say was in escrow. Over 300,000 was treasury stock? A There were 300,000 shares of treasury.

Q And the balance? A And the balance was owned by Sweeney or passed out to people who were identified with the company.

Q The only stock in which the company's treasury had an interest was the 300,000? A At that time; yes, sir.

By Mr. McCarter.

Q And was all of the stock other than the treasury stock put in escrow? A There was some few thousand shares that had been sold early after September, October, somewheres along there. There was some sold. Ten thousand shares in one block was sold, and so forth.

Q But except for that that was sold, all the rest was escrowed? A Supposed to be.

Q Do you recall the assembling factory and plant located at New Haven, Connecticut, which was mentioned? A Very well.

Q Was that the plant described in the Fuller agreement which has been put in evidence? A Yes.

Q And that was afterwards purchased and acquired by the Maxim Corporation? A It was.

Q I show you a deed, Fuller Manufacturing Company to Maxim Corporation, dated November 22, 1915, and ask you if that is the deed for the Fuller plant? A That is it.

Mr. McCarter: I offer that in evidence.

(The same is received in evidence and marked Exhibit P. 20.)

Q Are you familiar with the plant and the machinery? A I was.

Q Did you personally check up the list of machinery, and so forth, contained in the deed, P. 20? A I did.

Q In a general way what did the plant consist of? A Well, there was a brick, two-story brick building, a sprinkler system, on Blatchley avenue, right alongside of the main line of the New Haven Railroad; power house, storehouse, and so forth, and a side track right alongside of the factory itself.

Q I show you a map and a picture and ask you if that is a representation of this plant? A That is it exactly, yes. Here is Blatchley avenue. Here is the New Haven side track. Here is Blatchley avenue. Right in front here is the main line of the New Haven Railroad here, and here is the sidetrack we had into our property here.

Mr. McCarter: I offer the map in evidence.

(The same is received in evidence and marked Exhibit P. 21.)

By the Court.

Q Was that plant occupied? A Yes, it was occupied with machinery for making printing processes and binding machinery. That was what Fuller made up there.

By Mr. McCarter.

Q Was the plant new when the Maxim Corporation bought it? A No.

Q Do you know how long it had been used? A I don't.

Mr. Feick: If the Court please, I object on the ground that that goes to the question of value and overvaluation of the stock. We say that is not an issue in this case.

(Last question read by stenographer.)

(Question withdrawn.)

Q Now, Mr. Taylor, I note in Exhibit P. 3, which is the minutes of the directors' meeting authorizing the acceptance of Mr. Sweeney's offer, there is this recital: "After full and lengthy consideration and discussion among the members of the Board of Directors as to the value of and advisability of accepting Mr. Sweeney's offer, the following resolution was adopted." Was there any full and lengthy consideration and discussion among the members?

Mr. Feick: If the Court please, the same objection. This is embodied in the question of over-valuation and the assessment and the matter of valuation placed upon the

property. We say that that is not an issue in this case, and furthermore we object on the ground that the minutes speak for themselves.

Objection overruled.

Defendants' counsel prays an exception to this ruling of the Court.

Exception noted as ground of appeal.

The Court: I think you asked him that question and I think he said there was not.

The Witness: There was not. You mean if there was a full discussion?

Q (Read by stenographer.) Now, Mr. Taylor, I note in Exhibit P. 3, which is the minutes of the directors' meeting authorizing the acceptance of Mr. Sweeney's offer, there is this recital: "After full and lengthy consideration and discussion among the members of the Board of Directors as to the value and advisability of accepting Mr. Sweeney's offer, the following resolution was adopted." Was there any full and lengthy consideration and discussion among the members? A No.

Q Was there any discussion either at that meeting or before the meeting as to the nature or value of any of the inventions referred to in Mr. Sweeney's letter?

Mr. Feick: I object to the question on the same ground.

Objection overruled.

Defendants' counsel prays an exception to this ruling of the Court.

Exception noted as ground of appeal.

A No.

New Jersey State Library

Q Was any appraisal submitted at or before the meeting of the value of any such invention? A No.

Mr. Feick: The same objection.

Objection overruled.

Defendants' counsel prays an exception to this ruling of the Court.

Exception noted as ground of appeal.

Q Was there any discussion as to the invention of the Brown gun?

Mr. Feick: May I have a general objection to that character of question?

The Court: It may be noted.

A No.

Q Were the inventions of Mr. Maxim referred to in his letter, Exhibit P. 5, disclosed or discussed at the directors' meeting at all, or before the adoption of the resolutions? A No.

Q Did those inventions play any important part in the plans of yourself and your co-organizers of the company, for the company? A No.

Q Did the Board of Directors actually decide that $9,999,650 was the fair value of the property offered by Sweeney? A No.

Q Did any of the directors present at that meeting express any belief that such a sum was the cash or market value of those items, on that day? A No.

Q How did you fix upon the million dollars as the capitalization of the company? A Well, the idea was that with the very large business which we were going to get through Mr. Maxim —that is, particularly for the rapid-fire guns—

that that would be a fair valuation of the profits upon which we would be able to earn dividends. That was the thought.

Q What rapid-fire gun do you refer to? A The Maxim rapid-fire gun.

Q Invented by which Maxim? A Sir Hiram.

By the Court.

Q Is that the gun that has been produced here and is marked Exhibit P. 15? A No, that is the Brown air-cooled shoulder rifle.

By Mr. McCarter.

Q Did Captain Angel, as well as Mr. Beckert, have an understanding with Mr. Sweeney that he was to receive a block of stock? A Yes.

Q How much stock did he receive? A 35,000 shares. Captain Angel, Lawrence Angel.

Q That was also put in the escrow agreement as part of the 600,000 shares that you mentioned? A Yes.

Q Did you yourself have an understanding of the same nature? A I did.

Q How many shares did you get? A I got 5,000, but I gave 250 away.

Q What did you actually receive in the first instance as evidence of your 5,000 shares? A I got a letter from Sweeney that he was placing—he was giving an order to the United States Mortgage & Trust Company.

Q I show you a letter signed by Sweeney and ask you if that is the letter you just referred to.

Objected to as irrelevant and immaterial.

(Counsel argue.)

Objection overruled.

Defendants' counsel prays an exception to this ruling of the Court.

Exception noted as ground of appeal.

Mr. McCarter: I offer this in evidence.

(The same is received in evidence and marked Exhibit P. 22.)

Q Who were the directors of the company at the date of this resolution? A What date was that?

Q I mean September 4, 1915, the initial directors' meeting acquiring this property. A The original directors, you mean?

Q I want the directors at this meeting. A There is Sweeney, Beckert, Angel, Scully, Taylor—that I can think of.

Q Is there a Mr. Porter? A Porter, that is the man.

By the Court.

Q Six directors? A I am trying to think of the other one.

By Mr. McCarter.

Q Was Brown a director? A Brown, yes.

By the Court.

Q Seven directors. A That makes the seven, yes.

By Mr. McCarter.

Q Who was Mr. Scully and what was he? A Why, Scully was an old friend of Sweeney's who was connected with the Milton Brick Company of Milton, Pennsylvania, and he was also

connected with a financial house or financial concern in New York that specialized in automobile paper.

Q How long did his connection with the company last? A A very short time.

Q I direct your attention to page 55 of the minute book and ask you if you were present at the meeting of the Executive Committee therein recorded to have been held September 9, 1915? A Yes, I was.

Mr. McCarter: I offer that in evidence, page 55 and the following page.

(The same are received in evidence and marked Exhibit P. 23.)

Mr. McCarter: I will state that those minutes show that on September 9, 1915, the resignation of Winfield P. Porter as director was accepted and the resignation of William A. Scully as president was accepted, and Hudson Maxim was elected director and president.

Q Had any of the directors of the company in office at the time of the passing of the resolution accepting Sweeney's offer, so far as you know, any training or experience in the manufacture or sale of articles of the character referred to in the list of inventions attached to Mr. Maxim's offer? A Not that I know of.

Q Or did any of them have such experience in the department of exploitation of patents or patent rights covering articles of that character? A Not that I know of.

Q What had your own business been before that, Mr. Taylor? A Well, I had been a newspaper man and largely interested in mining in the West, and a promoter.

Q What had Sweeney's interest been? A Sweeney was a law graduate, a lawyer originally. He started as a lawyer and he got very much interested in the promoting of mining enterprises.

Q What branch of the military service were Captain Beckert and Captain Angel in? Do you know? A No, I can't say that I remember. I know that Captain Angel was with the army down in Porto Rico, but I have forgotten what their real connections were.

Q Do you recall whether any stock was issued to a Mr. Packard out of the Sweeney group of shares? A Yes. Packard got 50,000 shares, 5,000 of which he gave to, I think he was a relative, a man named Purcell. There was 5,000 shares standing in Purcell's name and 45,000 in Packard's.

Q Do you remember a Mr. Burns getting some stock? A Yes, M. V. Burns, yes. He bought 10,000 shares.

By the Court.

Q He bought 10,000 shares? A He bought 10,000 shares; yes, sir.

Q Of the original stock? A Yes, sir.

By Mr. McCarter.

Q Do you know whether any stock was placed in the name of a man named Crane? A Yes, and Crane and Bullwinkle, Crane of Crane & Bullwinkle. They are brokers. They sold some stock.

By the Court.

Q They sold some stock? A Yes, they sold it as brokers.

Benjamin F. Taylor, direct.

By Mr. McCarter.

Q How much? A Let us see. Around 12,000 shares.

By the Court.

Q They sold it, not bought it? A No, they sold it. It was Sweeney's stock, but they sold it.

By Mr. McCarter.

Q Was that some of the treasury stock or Sweeney's stock? A Sweeney's stock.

Q None of these shares that you have been talking about are any part of the 300,000 shares of treasury stock? A No.

Q Except for the people who bought stock, bought the treasury stock or bought that group of stock that was bought early in the game, did anybody give any consideration whatsoever to the company for any of this stock, except Mr. Sweeney? A That is all that I know of.

By the Court.

Q How about Burns? A Well, Burns bought Sweeney's stock; didn't do the treasury any good.

Q Did you tell us how many shares of stock Mr. Scully got?

Mr. McCarter: I will take care of that, your Honor.

By Mr. McCarter.

Q I show you a document signed by Mr. Sweeney and ask you if that refreshes your recollection at all as to the number of shares Mr. Scully got? A That is right; 1,000 shares.

By the Court.

Q Scully? A Scully.

Q Where did he get his stock from? A Sweeney gave it to him.

Mr. McCarter: I offer that in evidence.

(The paper referred to is received in evidence and marked Exhibit P. 24.)

By Mr. McCarter.

Q Is there any more stock, Mr. Taylor, other than that thousand shares that stood in Mr. Scully's name as a matter of convenience? A You mean in Scully's name?

Q Scully's name. A I think there was 10,000 or 20,000 shares standing in Scully's name. I have forgotten which it was.

Q I show you a book marked on the outside "Journal," September, 1915, and ask you if you can tell me whether that is the journal of the company? A It is. That is my handwriting.

Q On page 1, is that your handwriting? A Yes.

Q What was the entry at the bottom of page 1, patents, property, inventions and good will, made to record? A Patents, property, inventions and good will, $9,990,650, directors' stock $210 and treasury stock $140. That offsets the total issued capital, authorized capital.

Q Did the patents, property, inventions and good will you there recorded include anything other than the patents, property and inventions mentioned in the letter of Sweeney, Exhibit P. 4, and the continuing letter of Maxim, Exhibit P. 5 as modified by the subsequent contract

with Maxim, Exhibits P. 8 and P. 9? A Assuming that Sweeney's letter also covers the Brown gun, yes; that is all.

Q How did the company finance itself in the beginning? A Sweeney put up the money.

By the Court.

Q Is that the $10,000? A $10,000, and he contributed money from time to time as we needed it to take care of our expenses.

By Mr. McCarter.

Q Was he paid back afterwards? A He was.

Q Was any part of the treasury stock sold for cash to the public? A Yes, through Duff. That was later.

Q Now, did the company get a contract with the Danish Government? A We did.

Q When? A About the middle of November, I should say it was, for 30,000,000 cartridges.

Q Did the company enter upon the performance of that contract? A It did.

Q Was it profitable? A No.

Q In January, 1916, in what condition were the finances of the company? A Very rotten.

Q Had it at that time manufactured anything yet? A No, we had no production up to that time.

Q Was Mr. Sweeney able or willing to advance any more money at that date? A I think he had gone his limit.

Q Do you know whether any treasury stock was still being sold to the public at that date? A Very little, if any, at that time.

Q Do you know at that time how many shares of stock had been assigned or sold by Sweeney

with the result that what was the balance of the shares in escrow? A Why, I should say there would be around 600,000 shares. I can't tell you exactly.

By the Court.

Q Do you know how much treasury stock was sold altogether? A I can't tell you offhand. The record would show that.

By Mr. McCarter.

Q Who was Mr. J. W. O'Bannon? A Why, he was a manufacturer of leather, artificial leather and rubber, and he also had a large contract from the Russian Government for making guncotton, which he produced up at a factory just out of Providence.

Q What was his connection or association with the Maxim Corporation? A Well, he eventually became president.

Q When did you first meet him in connection with the affairs of the company? A Around the first of the year, 1916. I can't tell you the exact date, but it was after the end of 1915.

Q Did you call on him in his office in New York City? A I did. I went up to his office in the Marbridge Building, 23rd street and 5th or 6th, and 5th avenue; I have forgotten just where it was.

Q Did you submit him any financial statement of the company? A Yes, I did, our statements to the end of 1915.

Q Did you keep the books of the company at that time? A Well, I had charge of the books. I had an accountant at that time.

Q Did you take off a balance sheet from the books of the company showing the balance sheet condition as of December 31, 1915? A I didn't take it off personally, but I had it taken off.

Q Did you submit a copy of that to Mr. O'Bannon? A I did.

Q Is that it there in your hand? A Yes.

Mr. McCarter: I offer that in evidence.

(The same is received in evidence and marked Exhibit P. 25.)

Q Did you do the same thing with a trial balance? A Yes, showed him both.

Q Is that document which I show you now a trial balance, a copy of which you showed Mr. O'Bannon? A Yes, that is right.

By the Court.

Q As of what date? A That is of December 31, 1915.

Mr. McCarter: I find I neglected to offer in evidence this journal which was identified by the witness a few minutes ago. I now offer it.

(The same is received in evidence and marked Exhibit P. 26.)

Mr. McCarter: Now I offer the trial balance.

(The same is received in evidence and marked Exhibit P. 27.)

Q I show you a book marked ledger. Did you keep that, Mr. Taylor? A Yes, I did, in the early days. Yes, that is my handwriting.

Q On page 31? A On page 31, yes.

Q Did Mr. O'Bannon see this or a copy of that? A I think he saw a copy of it. If he did not see that he saw the copy.

Q He saw either this or the copy? A Yes. We showed him everything.

Mr. McCarter: I offer in evidence page 31 of the ledger.

(The same is received in evidence and marked Exhibit P. 28.)

Q Now, at the time you showed all these things to Mr. O'Bannon was there anything included, all the patents, property, inventions, good will, or anything in the balance sheet or the trial balance other than these various inventions and things which we have discussed heretofore? A That is all.

Q Did you take the minute book of the company to Mr. O'Bannon or to his attorney? A I took it down to J. Campbell Thompson, who is O'Bannon's attorney, down in Wall street.

Q Were you referred to him by Mr. O'Bannon? A Yes.

Q Do you know whether Mr. O'Bannon or Mr. Thompson or both of them made an investigation of the corporate records of the Maxim Corporation? A I don't know how far they went. I took them down the minute book.

Q Did Mr. O'Bannon enter into any arrangement with Messrs. Sweeney, Maxim, Packard, Angel and Beckert? A Yes.

Q What was that arrangement, Mr. Taylor?

Mr. Feick: If the Court please, I object on the ground that this is not binding on

the defendants unless it is shown that he was present. Whatever arrangements these people made among themselves has nothing whatever to do with Mr. Fleissner, and it is irrelevant and immaterial. That is true also of all these other exhibits that were put in.

The Court: I think that is so unless it will be stated that they expect to connect it.

Mr. McCarter: If your Honor please, this now is the very syndicate in which Mr. Fleissner participated, this O'Bannon syndicate. I am going to show that, and connect it. Mr. Fleissner became a member of the syndicate which Mr. O'Bannon here organized.

Mr. Feick: What is that? Even if he became a member of the syndicate, it does not render him liable unless he knew of this.

Mr. McCarter: We are going to show that.

The Court: You are going to show that he knew of this arrangement that you have asked him about?

Mr. McCarter: Certainly.

The Court: All right. It will be admitted then.

Q (Read by stenographer.) What was that arrangement, Mr. Taylor? A That these various shareholders whose stock was in escrow put a certain amount of it into a new pool, so to speak, amounting to 510,000 shares. There were 510,000 shares contributed to what is known as this syndicate, and that was stock that was sold around New York and other places.

Q What was paid for the stock by Mr. O'Bannon? A O'Bannon did not pay anything for it. It was simply put into this pool in order to raise some money for the benefit of the treasury of the company, because we did not have a cent, so to speak.

By the Court.

Q Did that include the 300,000 shares that had been transferred to you by Mr. Sweeney? A No, sir.

Q Outside of that? A Yes, sir. That had nothing to do with this O'Bannon syndicate.

By Mr. McCarter.

Q Was there a syndicate afterwards formed by Mr. O'Bannon? A There was.

Q Was there a written syndicate agreement? A Yes, sir.

Q I said afterwards formed. Was it formed at that time? A No, at that time.

Q Now, I show you a written document and ask you if you recognize that as the syndicate agreement? A Yes, this was what was known as the O'Bannon syndicate. I was the syndicate manager of this thing.

Mr. McCarter: I offer this in evidence.

Mr. Feick: I object, if the Court please, on the ground that it does not appear that Mr. Fleisner was a party to this agreement and had nothing to do with it. The members here named are apparently at the conclusion of the agreement. Mr. Fleissner's name does not appear.

Mr. McCarter: I will undertake to show by subsequent proof that Mr. Fleissner became later a member of that syndicate. He was not one of the original members.

The Court: With that understanding it will be admitted subject to a motion to strike out if it is not so connected.

Defendants' counsel prays an exception to this ruling of the Court.

Exception noted as ground of appeal.

(The same is received in evidence and marked Exhibit P. 29.)

(Mr. McCarter reads a portion of Exhibit P. 29.)

Q Which was actually put in, $100,000 or $200,000? A $200,000.

Q Were the 510,000 shares immediately segregated, or were there six hundred and odd thousand shares? A There were six hundred and odd thousand shares that were drawn to J. Campbell Thompson in a sort of a decision, and he issued the interim certificates, so to speak, to the people who participated in the syndicate.

By the Court.

Q What did you say about six hundred thousand odd shares? A There were that many shares in the United States Mortgage & Trust Company.

Q (Read by stenographer.) What did you say about six hundred thousand odd shares? A There were six hundred thousand odd shares which were turned over to J. Campbell Thompson. He acted as trustee for this stock, the 510,000 shares of which went into this O'Bannon syndicate.

Q That is all the syndicate received, 510,000? A There were 510,000 shares was sold to the syndicate managers, or to the syndicate purchasers for $200,000, which was paid half when they took it and the other half when we needed it, but it was all paid for. We got in the $200,000.

Q Why was the excess above the 510,000 paid over to Thompson? A Well, we wanted to keep it for the market, because we still, you see, had some treasury stock.

Q I thought you said the United States Trust was holding that in escrow? A But instead of having two lots in escrow, we put it all over with Campbell Thompson.

Q What became of that 300,000 shares that had been assigned to you? A That was still in the treasury.

Q That was not escrow stock at all, then? A That was with the United States Mortgage & Trust Company.

By Mr. McCarter.

Q Some of that was sold to the public? A Yes, but I am talking about the date. We sold some treasury stock to J. Robinson Duff, but there was some left which was not included in that stock, which was turned over to J. Campbell Thompson.

Q The treasury stock is what the general public bought? A Yes, that is what we were selling through the brokers, over the counter, and so forth.

Q Now, you mentioned that Mr. Thompson issued participation certificates to the members of the syndicate. I show you a document and ask you if you recognize that as a form of those participation certificates? A Yes.

Q That was the form? A That is the form.

Mr. McCarter: I offer that in evidence.

(The same is received in evidence and marked Exhibit P. 30.)

Q Did a Mr. T. D. Palmer become a member of the syndicate? A Yes, sir; he was a member of this syndicate; $5,000 cash.

Q How much? A $5,000.

Q Did he pay that money in? A Yes.

Q Did the company receive any other payment, property or consideration from the syndicate or any of its members while you were handling the affairs, such as you have stated? A That is all.

Q Mr. Palmer got one of those certificates, did he? A Yes. They all did.

By a Juror.

Q May I ask a question? What became of the $200,000 paid by the O'Bannon syndicate for that stock? Who got the benefit of that, the company or Sweeney? A Oh, no. Sweeney was entirely out of this. This was used for the needs of the company and it went into the treasury of the company, all of this $200,000 which we received for these 510,000 shares. There is no commissions or brokerages or anything of that sort.

By Mr. McCarter.

Q Now, I show you a book which is marked "Cash," and ask you to tell me whether or not that is the cash book of the Maxim Corporation during the period of February, 1915? A Yes.

Q Were those entries on page 6 made under your supervision? A Yes, but not by me personally.

Q Does this record any payments made by the members of the syndicate? A Yes. There were O'Brien, Hoffman, Palmer, Dillon.

Q That shows Mr. Palmer paying $2,500 on what date? A That would be February 23rd.

Q Does it show any later payment by him? A That was just half. Fifty per cent.

Q Turn to page 8. A Yes, on March 9th, Mr. Palmer paid $1,250.

Q Page 10. A I don't see it on that page.

Q Page 12. My mistake; turn to 12. A Yes, there it is, $1,250 on the 31st of March.

Q Making $5,000 in all? A Making $5,000 that he paid in.

The Court: I understand that was the amount paid by Mr. Palmer?

Mr. McCarter: I offer this in evidence, pages 6, 8 and 12 of the cash book.

Mr. Feick: The same objection, if the Court please, as to its relevancy and materiality unless it be connected up.

Mr. McCarter: We are getting very close to Mr. Fleissner now, your Honor.

By the Court.

Q This is Palmer's payment? A Yes, this is Palmer.

(The same is received in evidence and marked Exhibit P. 31.)

The Witness: He paid first $2,500, then $1,250, then $1,250, making altogether $5,000.

Q What was that for? A That stock sold at 39 and about one or two-tenths cents a share on this 510,000 shares of the syndicate.

Q Was he one of the syndicate? A Yes, Palmer was one of the subscribers to the syndicate. He had $5,000 worth.

By Mr. McCarter.

Q I show you a letter purporting to be signed by you, I think, addressed to Mr. T. D. Palmer, dated May 12, 1916. Does that refresh your recollection as to the number of shares that Mr. Palmer got? A Yes, 12,750 shares. That is what it was.

Q Did you have correspondence with Mr. Palmer relative to his membership in the syndicate? A Oh, yes.

Q Will you look over that file I have handed you there and tell us if that is your correspondence with Mr. Palmer? A Yes.

Mr. McCarter: I offer that in evidence.

Mr. Feick: We have the same objection, if the Court please. This correspondence is between Mr. Palmer and Mr. Taylor, and we object to it on the ground it is irrelevant and immaterial.

The Court: I will sustain the objection.

Mr. McCarter: I undertake, your Honor, to connect Mr. Fleissner with this, not all of these shares, but with one-half of these.

The Court: It may be marked for identification and then if you do so it may be admitted in evidence. I am afraid we are getting so much of it that it is unfair to the defendant to say to him that it will be admitted subject to motion to strike out

if it is not connected, but upon its connection, showing knowledge on the part of Mr. Fleissner, you may then offer it in evidence. I think we will put part of the burden of remembering upon the plaintiff now.

Mr. McCarter: I would like to have this marked for identification, then.

(The same is marked Exhibit P. 32 for identification.)

Q Is it a fact, Mr. Taylor, that the time while you were syndicate manager of this syndicate the members of the syndicate got only these participation certificates and did not get certificates of stock? A They just got the interim receipts.

Q In whose name was the stock standing all that time? A It was in various names, but in the possession of J. Campbell Thompson.

By the Court.

Q In his name? A No. For example some stock in Sweeney's name, some in Packard's name. That was in the United States Mortgage & Trust. It was afterwards turned over to J. Campbell Thompson.

Q And in the amounts that you have mentioned, for instance Purcell 5,000 and Packard 45,000, etc.? A Yes.

By Mr. McCarter.

Q And the endorsements were endorsed in blank, I suppose? A That is it.

Q But they have not been transferred on the books of the company out of the early holders?

A They have not been transferred from the names of the early holders; no, they have not.

Mr. McCarter: Cross examine, Mr. Feick. I understand, however, that Mr. Feick will very kindly let me put on another witness now and cross examine Mr. Taylor in the morning.

The Court: Just while I am thinking of it, however, I want to ask a question.

By the Court.

Q It is true that each party to this syndicate agreement received twenty-fifty-first parts of 510,000 shares? A Well, it depended on the amount. There were 510,000 shares, and they got that in proportion to the $200,000 which they put in.

Q And $200,000 was all actually paid into the treasury of the company? A All paid into the treasury of the company.

Q Then the proportion would be twenty-fifty-firsts? A That is right.

Q Did each of them get that twenty-fifty-firsts? A They did.

Q Of the 510,000? A Of the 510,000. In other words $5,000—for $5,000 Mr. Palmer got 12,750 shares.

Q Now, any balance above that amount of stock which was held by Campbell Thompson was held for treasury purposes? A No, because we had the remainder of these 300,000 shares in the treasury. We held it there to keep that stock off the market.

Q And that was stock that was held for Packard which was held in escrow by them and which was independent of any stock which was

held by you in the treasury of the company? A Yes.

HERBERT W. OVIATT, sworn in behalf of the plaintiff.

Direct examination by Mr. McCarter.

Q Where do you live, Mr. Oviatt? A New Haven, Connecticut.

Q What is your business or occupation? A Real estate.

Q How long have you been in the real estate business? A Thirty-two years.

Q In New Haven? A In New Haven.

Q Are you a member of any particular board up there? A New Haven Real Estate Board.

Q Have you ever been a member of the New Haven Board of Compensation? A Yes. That is the commission of the City of New Haven assessing benefits and damages for property taken and damage done by the city.

Q Have you been engaged in the buying and sale of property in New Haven during this period of years you have told us about? A I have.

Q Are you in the habit of making appraisals for any of the courts up there in New Haven? A All the time.

Q What courts? A Superior Court, Common Pleas, Probate Court.

Q Are you familiar with the property conveyed by the Fuller Manufacturing Company to the Maxim Corporation, described in Exhibit P. 20? A Yes, sir.

Herbert W. Oviatt, direct.

Q Do you recognize Exhibit P. 21 as a map and picture of the property? A Yes, sir.

Q Describe the property to us generally, please? A The property is on the outskirts of New Haven, 574 feet on Peck street, 257 feet on Blatchley avenue, and about 600 feet on the north line and running along the railroad at an angle about 754 feet. On this property there is one large—there was one in 1915—large factory building 488 by 52, two floors, a cellar in one-half of the building.

By the Court.

Q What was the construction? A Brick. In addition there was a boiler room and stock room.

By Mr. McCarter.

Q Do you know when any of these buildings were built? A The permit was issued May 8, 1902.

Q Can you tell us, in your opinion, Mr. Oviatt, what the land and buildings were worth, the fair market value, on or about September 4, 1915?

Mr. Feick: If the Court please, I object on the ground that the question of over-valuation is not one of the issues in this suit, that that has been determined, if it has been determined, in New York, and until there has been an assessment made here this court cannot go into the question of an assessment being made. We are not a court of equity. We are asked to enforce an assessment.

The Court: I suppose this question is involved or may be involved in the knowledge

of Mr. Fleissner as to the value of the stock which had been issued for this property, isn't it, if he made any investigation?

Mr. Feick: If he did, yes; but I do not see what it has to do with it if he investigated this particular property, but they are getting an awful lot of stuff in here that is absolutely immaterial and irrelevant.

The Court: It rather seems to me so, but I may state it may be that it will have to be stricken out eventually. I am inclined to admit this testimony. It may be admitted and an exception may be noted.

Defendants' counsel prays an exception to this ruling of the Court.

Exception noted as ground of appeal.

A I can.

Q What is it, please? A $207,500.

By the Court.

Q That was for the building and land? A Yes, sir.

By a Juror.

Q May I ask a question? You said that the buildings were brick, or at least the large buildings were brick? A Yes.

Q I presume the floor construction was wood or concrete? A Wood.

Q The roof is wood? A Yes.

Q Covered with what? Slag, gravel, or what? A Gravel roof.

Q And the other buildings? A The stock room was a corrugated iron over wood, and the power house was brick with a tall chimney.

Henry F. Kurtz, direct.

HENRY F. KURTZ, sworn in behalf of the plaintiff.

Direct examination by Mr. McCarter.

Q Where do you live, Mr. Kurtz? A In Rochester, New York.

Q What is your occupation or profession? A I am an optical engineer.

Q What has been your professional education and experience? A Special training in the University of Rochester and in the Mechanics' Institute in Rochester in physics and mathematics directed towards the ultimate avocation of optical engineer.

By the Court.

Q Suppose you just tell us what an optical engineer is, please? A An optical engineer is an engineer who designs and superintends the building of all sorts of optical instruments, including optical instruments, surveying instruments, field glasses, telescopes, and even an ordinary spectacle.

By Mr. McCarter.

Q What has been your experience since your education has been completed? A Since 1915, I have been connected with the scientific bureau of the Bausch & Lomb Optical Company. We are responsible for the design of all the optical products made by that company.

Q Have you at the request of Mr. Arkush, examined certain abandoned applications of Hudson Maxim for improvement in periscopes, position finders and range finding positions? A I have.

Q I show you a certified copy of file, wrapper and contents and drawings in the matter of the abandoned application of Hudson Maxim, serial No. 871883, for improvement of periscopes or position finders for submarine, torpedo boats or other vessels, and ask you if that is one of the matters into which you have examined? A It is.

Q Just describe it to us briefly, will you, please? A It consists of a submarine periscope which has an apparatus for viewing the surrounding scenery or horizon about a submarine boat while the boat is submerged. It consists in essence of a long, vertical tube, with a window at the top through which light enters and a window at the bottom from which emerges, and intervening lenses and optical elements for the formation of an image. The application in question covers certain alleged points of novelty—that is, of newness—that are things that had been invented, of the same kind, previously, all of which points of newness had been repeatedly rejected by the patent office.

Mr. Feick: If your Honor please, I object.

The Court: I sustain the objection.

Mr. Feick: I ask that the answer be stricken out.

The Court: That part of the answer which refers to the rejection by the patent office will be stricken out.

Mr. McCarter: I believe at this time I ought to have the exhibit in evidence.

(The same is received in evidence and marked Exhibit P. 33.)

Q Have you formed an opinion, after examination of this document, Exhibit P. 33, with respect to both the utility of the invention, if I may call it that, and as to its novelty? A I have.

Q State your opinion.

Mr. Feick: If the Court please, I object on the ground that the question of overvaluation is not an issue in this case, the ground stated before. That should have been thrashed out before the assessment was made, and cannot be done at this proceeding. I further object on the ground he has not shown himself to be qualified as a witness in torpedo tube periscopes.

The Court: I will sustain the objection upon the latter ground; not upon the former.

Q Has your experience and education, Mr. Kurtz, covered such things as periscopes, position finders, as described in Exhibit P. 33? A My experience has.

The Court: I think an opinion on that subject is not proper. I think if he can state from his own knowledge whether or not the application does contain new and improved appliances upon those already issued, he may so state. If it is not new and he knows it is not new, he may so state, but his opinion on that subject without the knowledge would be of no value.

Q I ask you, then, is this a new invention or not? A It is not.

Q Now, is it useful? A It is not.

Henry F. Kurtz, direct.

Q I show you another certified copy of file, wrapper and application in the abandoned application of Hudson Maxim, serial No. 3489 for so-called improvement in range finding position. Have you examined that?

The Court: I suppose you mean were they new on September 4, 1915, in order that the record may be right. We are speaking now of the invention described in application No. 871883, the one you had before.

The Witness: It was not new in September, 1915.

By Mr. McCarter.

Q Now, proceed with this one, please.

By the Court.

Q This is the improvement in range finding position? A In range finding position.

Q Does that relate to a periscope, too? A That relates to a submarine periscope, too.

By Mr. McCarter.

Q And you have examined that at our request? A I have.

Mr. Feick: Of course we have the same objection, if your Honor please, as to its materiality in this issue.

Mr. McCarter: I offer this in evidence.

The Court: It may be admitted.

Defendants' counsel prays an exception to this ruling of the Court.

Exception noted as ground of appeal.

(The same is received in evidence and marked Exhibit P. 34.)

Q Describe the so-called invention described in Exhibit P. 34? A This consists very much of the same thing, submarine periscope with the window at the top, intervening lenses, but with this difference, that at the lower end there was a receiving screen described, having upon it a scale. The receiving screen received an image of the field of the periscope—that is, the part at which it was directed, the part of the horizon at which it was directed—and a very small picture of that part of the horizon was thrown upon the screen. The screen had a scale on it graduated in terms of distance of objects in the field from the periscope. It was stated that by observing the image on the screen and noting its relation to the scale, one could tell the distance of the object.

Q Was this invention (I am so calling it for the purpose of convenience) new in September, 1915? A It was not.

Q Was it useful then? A It was not.

Cross examination waived.

LOUIS H. GUNTHER, sworn in behalf of the plaintiff.

Direct examination by Mr. McCarter.

Q Mr. Gunther, are you connected with the United States Corporation Company? A Yes, sir.

Q What position do you hold? A Treasurer.

Q Did you have anything personally to do with the records of the issue and transfer of stock of the Maxim Corporation? A I did.

Q Have you been asked to produce certain records? A I have.

Q Will you produce them? You produce two groups of documents. What is this group of smaller documents? A Ledger sheets.

Q What is this group of larger documents? A Transfer sheets.

Q Of the stock of the Maxim Corporation? A Yes, sir.

Q They are the original sheets? A Records.

Q Original records? A Yes.

Q Made under your supervision? A Yes.

Q In the office of the United States Corporation Company? A Yes.

Mr. McCarter: I offer in evidence the transfer sheets Nos. 1, 2, 3, 4, 6, 8, 9, 11, 17, 23, 24, 34, 36, 47, 52, 56, 57, 71, 75, 88, 154, 297, 446, 473, 487, 488, 490, 499, 502, 506, 523, 527, 530, 531, 536, 566, 568, 580, 602, 607, 612, 679, 701, 702, 703 and 782.

Mr. Feick: If the Court please, I object, except insofar as those transfer sheets relate to the stock issued to Mr. Fleissner. We are not concerned with some 980,000 of some other shares transferred to someone else. Perhaps the witness can pick it out, but we ought not have all of them there.

Mr. McCarter: Of course there are entries on these papers which include other than Mr. Fleissner's stock, but there is no page here offered which does not among the entries on that page refer to the stock in this syndicate with which we are going to connect Mr. Fleissner.

The Court: It may be admitted with that understanding.

Defendants' counsel prays an exception to this ruling of the Court.

Exception noted as ground of appeal.

The Court: This will be subject to a motion to strike out if it is not so connected.

(The same are received in evidence and marked Exhibit P. 35.)

Q Now, Mr. Gunther, I show you a document that purports to be a certificate of stock in the Maxim Corporation. Do you recognize it as such? A It is a stock certificate in the Maxim Corporation; yes, sir.

Mr. McCarter: I offer that in evidence, it being to Christian Fleissner.

(The same is received in evidence and marked Exhibit P. 36.)

The Court: How many shares is that for?

Mr. McCarter: Nine hundred and some odd. Nine hundred fifty-seven shares. It is dated August 23, 1917.

Cross examination by Mr. Feick.

Q Can you tell from looking at your records from whom those shares were transferred? A By referring to the transfer sheet.

Q Have you got those here? A And also the ledger sheet, certificate by the name of Hudson Maxim.

By the Court.

Q Transferred from Hudson Maxim? A Yes, sir, being a part of certificate number 108.

Q Which was for how many shares? A At that time 35,197.

Q For 35,197 shares? A Yes, sir.

By Mr. Feick.

Q Now, can you tell when this certificate was transferred out of Mr. Fleissner's name on the books of the company? A October 30th.

Q What year? A 1917.

By the Court.

Q Transferred from Mr. Fleissner what date? A October 30, 1917.

By Mr. Feick.

Q Do you know to whom that was transferred? A I do not.

Q Would your records show that? A I was not asked to bring that transfer sheet.

Q Can you bring that tomorrow? A Yes, sir.

Q Does that mean that that was transferred to H. Content & Company? A Probably was.

Q They are brokers in New York, however, are they not? A Yes.

Q Will you let me take the ledger sheets and the transfer sheets relating to the transfer of those 957 shares? What is this? A transfer sheet? A Transfer sheet.

Mr. Feick: May it be marked for identification?

(The same is marked Exhibit D. 1 for identification.)

Q Now, Mr. Gunther, the first sheet here relates to the 957 shares. That I think is that certificate, is it not? A Certificate 8612.

Q That is Exhibit P. 36. Now, this second sheet seems to refer to some other shares. Can you tell us about that, what shares that refers to and the number? Will you bring your records with reference to those other sheets tomorrow?

Mr. McCarter: Maybe we are willing to admit it. I do not want to bring Mr. Gunther back if it can be helped. What is it you want to establish?

Mr. Feick: There seems to be here a record of the transfer of two batches of a thousand shares each. Do you claim anything with respect to those?

Mr. McCarter: A thousand shares each?

Mr. Feick: Yes. There are two thousand shares which apparently were puchased by Mr. Fleissner to July, 1915, and transferred out prior to June 21, 1917.

The Court: Is your claim all with reference to 957 shares?

Mr. McCarter: No, with reference to 6,125 shares, but they are shares other than these shares that Mr. Feick is looking at there. In other words, Mr. Fleissner in addition to these 6,125 shares of this O'Bannon Syndicate bought some of this treasury stock for which he paid $5,000 in cash to the company and on which no assessment has been made, and on which we are now making no claim whatever, and will stipulate that we are making absolutely no claim on any stock other than the stock that came from

the O'Bannon Syndicate. We are making no claim to recover an assessment on that stock. We are making no claim on this additional stock other than the 6,125 shares.

The Court: Have that marked for identification and make that statement with reference to that particular identification mark upon that sheet. Have that marked for identification.

(The same is marked D. 2 for identification.)

The Court: Now, I understand the statement that Mr. McCarter has just made is with reference to the stock shown on ledger sheet No. D. 2 for identification, is that right?

Mr. McCarter: I state that the plaintiff does not seek to collect on any assessment upon any stock referred to in Exhibit D. 2 for identification. We do not wish to limit ourselves to the right of going into the circumstances of this as bearing on notice.

Mr. Feick: That latter qualification to the statement perhaps makes it necessary for us to find out where that stock went to and to whom it was sold. The witness had better be instructed to bring those records tomorrow.

(The Court takes a recess until tomorrow, Tuesday, April 23, 1929, at ten o'clock A. M.)

Benjamin F. Taylor, recalled, cross.

Tuesday, April 23, 1929, ten o'clock A. M.

TRIAL RESUMED.

BENJAMIN F. TAYLOR, recalled in behalf of the plaintiff.

Cross examination by Mr. Feick.

Q Mr. Taylor, did I understand you to say on your direct examination that you were a stock broker before you went in this enterprise? A I have been a broker and a promoter.

Q Before you became a promoter of this enterprise— A Yes, sir.

By the Court.

Q Were you the promoter of this enterprise? A Well, I was one of them.

By Mr. Feick.

Q Who were the other promoters? A In this Maxim?

Q Yes. A Mr. Sweeney, Beckert, Angel, were the most active.

Q Hudson Maxim was one? A Hudson Maxim, yes, he was.

Q Now, when did you first begin considering the formation and promotion of this company? A I should say we first started along in July of 1915.

Q How did that come about? A Beckert and Angel were figuring on getting together an organization for assembling rifles and it was discussed and it was thought in the end that the machine guns were going to play a more important part than the rifles.

Benjamin F. Taylor, recalled, cross.

By the Court.

Q Well, it was a closed book to you on the other rifles anyway, wasn't it? A Why, Beckert and Angel were the men that had the idea.

Q I say, the furnishing of anything but the rapid fire guns was a closed book to you, wasn't it? A No, not entirely, because we were working on this Brown rifle that we thought—

Q I thought that was a rapid fire. A It is a rapid fire. It is a shoulder rifle.

By Mr. Feick.

Q And the reason that you became interested in this proposition was because of the tremendous demand for arms and munitions due to the war? A Yes, sir.

Q How long did your negotiations in connection with the formation of this company go on before you actually decided to form the corporation? A Well, we were negotiating, talking, and in conference, I suppose, for five or six weeks, and then the thing was brought to a head.

Q And in that conference there were Robert Sweeney, yourself, Mr. Beckert, and Mr. Angel and Hudson Maxim? A Well, Hudson Maxim did not come in until later on after it was decided that the best thing to do was to take up the manufacture of the rapid fire machine guns, because of the fact that Mr. Maxim said if we could make deliveries he could get large orders.

Q Now, when the company was formed you were one of the incorporators, and you were elected as a director and as secretary, I believe? A Secretary and assistant treasurer. I was one of the incorporators, one of the directors, and was elected treasurer and assistant secretary—

no, secretary and assistant treasurer; I am wrong. That was it.

Q And the others were Mr. Sweeney, Mr. Beckert, Mr. Angel and Mr. Maxim? A Well, the incorporators—there were three incorporators.

Q Who were they? A Sweeney, and I forget whether it was Beckert or Angel, and myself. It was either Beckert or Angel, Sweeney and myself.

Q Well, the certificate of incorporation will show that. A That will show who they were.

Q Then you elected those three and some others as directors? A Yes.

Q Who were the others? A Brown, Scully, Porter, I think—the records will show, however.

By the Court.

Q That is, you mean the five that you have mentioned other than Scully and Porter? A There was Sweeney, Beckert, Angel, Taylor, Brown, Porter and Scully. I think that was the original board, but the records will show that.

By Mr. Feick.

Q And then you as a director and the others decided to accept these properties and assets which were offered to the company by Mr. Sweeney, I think, and Mr. Maxim, and to issue the corporate stock in payment? A That is correct.

Q And to issue all of the corporate stock, the 999,965 shares, I think? A That is correct.

Q In payment of that property? A Yes.

Q Now, to whom were those certificates issued? A Well, there was a certificate to Mr. Maxim, some went to— There were seventy thousand shares to Beckert, thirty-five thousand

shares to Angel, five thousand shares to a friend of Mr. Packard's, forty-five thousand shares to Packard—Scully—Burns got ten thousand shares; three hundred thousand shares to the treasury.

Q No, wait. Aren't you wrong there? The three hundred thousand shares were turned back. A Well, they eventually went into the treasury.

Q But I am asking you now how the original stock was issued.

By the Court.

Q In other words, was there a certificate issued in accordance with the resolution, to Sweeney originally for 999,965 shares? A I don't remember whether it was issued that way or whether it was issued on Mr. Sweeney's orders, for example, to Maxim and others.

Q Didn't the book that you had here yesterday, that stock book, show 999,965 shares was issued, that a certificate for it was issued to Sweeney? A I don't remember whether the certificate was issued to Sweeney or whether the certificates were issued on Sweeney's orders. They used up the 900,000.

The Court: Where is your book from which you testified yesterday on that subject?

Mr. McCarter: You mean the transfer sheets that Mr. Gunther identified?

The Court: No, the book he testified from.

The Witness. A journal entry.

The Court: I think it was the journal, yes.

Mr. McCarter: It does not show the stock holdings. It just shows the capital stock, so much.

The Witness: It just shows capital stock so much.

By Mr. Feick.

Q Have you any record to show how the capital stock was originally issued? A The stock book would show that.

Q You had no certificates, however, did you? A We did.

Q Where is it? A I guess that must be at the United States Corporation Company.

Q Way down in Delaware? A Well, I don't know about that.

Q How can we find out? Who would know? A I guess Mr. Gunther would know.

Mr. McCarter: The records from Gunther are the photostats, I think.

Mr. Feick: Those are merely the transfer sheets, not the stock books.

The Court: He said they were the stock certificate sheets in the usual form and that would show how the certificates were actually issued.

Mr. McCarter: This shows, your Honor. This is the original stock record. That has the United States Attorney revenue stamps on it. In their system that is the way it is kept; that is all. This witness has never testified there was any stock certificate book.

Mr. Feick: He just did three minutes ago.

The Witness: There was a stock certificate book.

Mr. McCarter: Well, then, perhaps there is, but that is the original book just the same.

The Witness: That is the photostat of the transfer book of the United States Corporation.

Mr. Feick: Yes, but it is not the original stock certificate book.

The Witness: No, I don't know where that is.

Mr. Feick: I think that that ought to be produced, if the Court please.

Mr. McCarter: Well, it is not here.

Mr. Arkush: There is no such book. They were kept as certificates loose. The certificates were loose.

Mr. Feick: The witness has testified that there was an original stock certificate book.

The Court: There was a book produced here yesterday on which the issue, as I understood, of this full amount of stock to Sweeney was recorded. Now, the books which were produced yesterday—there is the journal and a ledger. Did you show him the journal?

Mr. McCarter: Here is the journal, your Honor, that he identified yesterday. It does not show who the stockholders are at all. It just shows the capital stock. It does not tell you whether it is in the name of Sweeney or Tom, Dick or Harry or anybody.

The Court: I guess this is what I have in mind, because there is an entry here showing $9,999,650. That is probably what I had in mind.

Mr. McCarter: The only stock record of any kind that we put in yesterday were the

records identified by Mr. Gunther, which are these I showed you just a moment ago.

The Court: Where is the ledger? There was a ledger produced yesterday, which is Exhibit P. 28.

Mr. McCarter: Here is the financial ledger.

The Court: Then there was a cash book produced.

Mr. Arkush: That was for the following year, 1916.

The Court: This gives no information on the issue of stock. All right.

By Mr. Feick.

Q Now, was there an original stock certificate book? A My recollection is that we started off with a book, and afterwards I know that the certificates were loose.

By the Court.

Q In the form of the one produced yesterday, Exhibit P. 30? A I don't remember Exhibit P. 30.

Q That was the typewritten form of certificate which you said was issued by Mr. Campbell Thompson. A J. Campbell Thompson. That was to show these people's interest in this 510,000 share syndicate.

By Mr. Feick.

Q Well, at any rate the original issue of 999,965 shares was made to Mr. Sweeney or on his order, and those certificates were actually issued at that time? A They were.

Q And delivered? A Well, they were escrowed.

Q But they belonged to the promoters? A They belonged to the people in whose names they were issued.

Q And those were the five promoters that you mentioned here, or those to whom they had assigned, is that right? A Yes, and some actual sales, sales that Mr. Sweeney made.

Q To purchasers on the market? A To purchasers.

Q So that from that time on the promoters were the owners of those shares, or those to whom they had sold? A Correct.

Q Now, subsequently to that some of these shares were turned back to the company, is that right? A Yes, I believe they were.

Q How many? A I can't tell you offhand.

Q Do you know when? A No.

Q Have you any records to show how many and when that was done? A The records of the United States Corporation Company would show all that, because every transfer was made through them.

Q Well, where are those records? A I don't know where they are. There are some of that, I should imagine. I don't know where the rest are.

Q Well, see if you can pick out the transfers back to the company of the 300,000 shares. A Here is the 300,000 shares, certificates 316 and 317 issued to me as assistant treasurer. That was November 10th.

The Court: There is an entry of that in the company's ledger, too.

Q So there was an original issue to you of 300,000 shares? A As assistant treasurer.

Q That was not in purchase of this property then? A Well, the whole issue was, in the first place was to Sweeney. That paid him for everything that he had turned in for those contracts, and he contributed 300,000 shares to the treasury.

Q For the purpose of having them sold on the market? A That is, finance the company.

Q To raise further capital for the company? A Correct.

Q And that was issued in your name under authorization of the Board of Directors? A Yes, sir.

Q How many shares were issued to you individually as your share in the enterprise?

The Court: You mean of the original?

Mr. Feick: Of the original issue.

A Mr. Sweeney authorized the United States Corporation Company to issue me 5,000 shares, and I gave 250 shares to a friend of mine; so I eventually got 4,750 shares.

Q At that time? A No, I didn't get that until May or June, somewheres in 1917. They were in escrow. I never got them.

Q The reason you didn't get them is because they were escrowed? A They were escrowed.

Q But they were yours, and it was your share of your part in promoting this company, is that right? A I guess that is a correct statement.

Q Now, you were, as I understand it, a stockbroker and a promoter? A Yes, sir.

Q And you were familiar with corporate affairs in general, were you not? A In a general way.

Q And how matters were handled pertaining to corporations? A Yes.

Q Did you realize that you as a director were in a position of trust in connection with the promotion of this company and the issue of its stock as full paid and non-assessable? A I was.

Q And did you appreciate that fact at the time that you voted in favor of this resolution appraising this property at $10,000,000 and authorizing its purchase by the issue of 1,000,000 shares? A 1,000,000 shares.

Q Of full paid and non-assessable stock? A Yes, but we—

Q Wait. That is the answer. And yet you voted in favor of that resolution authorizing the purchase of the property and appraising it at $10,000,000? A Not in cash; in stock.

Q In stock and cash. Did you appraise it at that price in cash? A No, in stock.

Q Only in stock. Did you authorize the purchase of that property at $10,000,000 either in cash or by stock? A By stock.

Q Not in cash? A Not in cash.

Q Let us see. Let me read it to you. "Whereas the offer made by Robert Sweeney dated September 3, 1915, to this corporation, to turn over certain properties is outlined in said letter and the papers attached thereto, in exchange of $9,999,650 in cash or full paid stock." So it was both, wasn't it? A Well, it was either.

Q Well, either, but it was either cash or stock, is that right? A Yes, sir.

Q Then you go on in the resolution which you voted for, "Appraising this property at a fair value of $10,000,000." A In stock.

Q You don't say so. "That it purchase and acquire said property and that the consideration and purchase price mentioned in said written proposition is the fair value of said property, which this Board hereby adjudges and declares by the passage of these preambles and resolutions." That met with your approval, didn't it? A I voted for it evidently.

Q And then later on when the proposition was accepted it was resolved to issue stock instead of paying cash. That was later, is that right?

By the Court.

Q I suppose it was never contemplated to sell it for cash, was it? A I beg your pardon?

Q It was never contemplated that it would be sold for cash, was it? A This stock or the property?

Q Yes. A No.

Q This 999,000 shares. A If we could have sold it for cash—

Q I say, it was never contemplated that it should be? A It was contemplated that we were to dispose of the treasury stock as fast as possible.

Mr. McCarter: He does not understand. You said "sell."

The Court: I suppose the company was selling the stock. That is what I mean.

Mr. McCarter: Your Honor's question is perfectly clear.

Q It was never expected that the company would receive cash at par for those shares, was it, for those 999,000 shares? A Well, we hoped to.

Q That is your answer to my question, is it? A I think that is a fair answer, your Honor.

Q If you are satisfied with it, I am. There is just one little transaction there I have not quite understood. It is provided that Mr. Sweeney shall put up his check for it, ten thousand, which was put up? A Yes.

Q Was that a part consideration for the stock, or was that money repaid? A No, that was money he loaned the company.

Q And repaid to him? A Yes.

By a Juror.

Q I did not hear that. A That was repaid to Mr. Sweeney, $10,000 he advanced in the early days.

Q Advanced on a note of the company? A I don't think there was any note. I think just current account. Current account you might call it.

By Mr. Feick.

Q Now, I show you a blank stock certificate found in the minute book at page 21, marked specimen. A Yes.

Q Is that the certificate of stock that was issued and used by the company?

The Court: The form, I suppose you mean?

Mr. Feick: The form.

A Yes.

Q And that certificate provides that blank is the owner of fully paid and non-assessable shares of capital stock of the Maxim Corporation. Now, did you sign those certificates? A Yes.

Q And delivered them? A I don't know whether I delivered them or not. I signed them.

Q You delivered them to somebody. You did not keep them yourself. A Why, they got them. Whether I delivered them or whether they went by mail, I don't remember all of that.

Q How long were you a director? A I think it was the latter part of June, 1917, that I resigned. The records would show that, but that is my recollection of it.

Q So you acted as a director and as an official of this company from August, 1915, until June, 1917? A That is substantially correct.

Q About two years? A The company was incorporated. We had our first meeting, I think, on the 3rd or 4th of September. We were incorporated in August. We got our incorporation papers in August.

Q What did you pay for your stock? A Nothing.

Q Nothing? A Not in cash.

Q What? A I didn't pay anything in cash for it.

Q Did you pay anything of any kind? A No, I can't say that I did. It was given to me by Sweeney.

By the Court.

Q How is that? A It was given to me by Mr. Sweeney.

By Mr. Feick.

Q Had you known Sweeney for some time? A Yes.

Q Was he a personal friend of yours? A Yes.

Q How about Mr. Beckert? A No, he was new. I did not meet him until these negotiations started.

Q You were introduced to him in connection with these negotiations to promote this company? A Yes.

Q Is that true of Lawrence Angel? A Yes.

Q And Hudson Maxim? A Yes, sir.

Q You had heard of Hudson Maxim before, hadn't you? A Oh, yes.

Q And you appreciated the fact that he was quite an authority on explosives? A Yes.

Q And arms and munitions, is that so? A Well, especially explosives.

Q He was famous, though, wasn't he? A Yes.

Q Very well known here? A Yes.

Q And had a wide reputation? A Yes.

Q Now, will you see if you can find here in the minute book the provision of the by-laws, if any, providing for the purchase of stock by the issue of property? I think it is page 34, or around there. I think it is Section 9 of the by-laws, paragraph 3. A Purchase or otherwise acquire for the company any property, right or privilege which the company is authorized to acquire.

Q Now, No. 4. A To pay for any property purchased for the company, either wholly or partly, in money, call bonds, debentures or other securities of the company.

Q And that was the provision under which you were operating at the time you purchased this property and issued this stock, is that right? A I guess so.

Q Is there anything in your certificate of incorporation about issuing stock of the property? A I couldn't say.

Q Will you look at it?

The Court: I am just wondering what difference that makes?

Mr. Feick: It shows the authority of the Board in entering into this transaction.

The Court: They have the statutory authority to do that aside from the certificate of incorporation or by-laws.

Mr. McCarter: I will concede it was in the certificate of incorporation. You need not take time for that.

Mr. Feick: That answers it.

Q Do you think that at the time that appraisal was made you were honest in voting for that resolution? A I didn't quite get the last.

Q Do you think that at the time you voted in favor of that resolution you were acting honestly? A Yes.

Q So far, now, we have gotten these stock certificates issued to Mr. Sweeney or on his order, and they are escrowed or delivered to purchasers of the stock, is that right? A Yes, sir.

Q Can you tell us what happened later to the company stock? What was done with it? A Well, I think the next move was when we made the deal with J. Robinson Duff to market this stock, market the treasury stock.

Q That was 300,000 shares? A He put out that 300,000 shares.

Q And that was marketed by him? A Yes.

Q Did he dispose of all of it? A No.

Q How much did he dispose of? A Well, the record would show, but as I remember it I think Duff sold about 100,000 shares.

Q What did he do with the rest of it? A That was still in the treasury.

Q Well, what happened to that? A Well, there was a syndicate formed in June, 1916, to which 40,000 shares of this treasury stock was sold at $5 a share.

Q What was the first syndicate that was formed to take over the stock issued to the promoters or on their order? A The promoters' stock, as I say, that was in escrow.

Q To keep it off the market they put it in escrow? A To keep it off the market.

Q But it was the promoters' stock, wasn't it? A That was promoters' stock.

Q What was done at the time the first syndicate was formed, if there was one formed? Do you remember the Taylor-Alcorn syndicate? A Yes.

Q When was that formed? A I should say that was in the fall of 1915.

Q 1915? A 1915, I think. That is a matter of record, though.

Q And that syndicate was formed to take over the stock from the promoters to sell it? A I don't remember as to the details there.

Q They are rather important. A Well, it is all in the record there.

Q This first syndicate was formed in 1915? A As I remember it.

Q For the purpose of taking over from the promoters the stock that they had and disposing of that, is that right? A I have forgotten whether that was the first or the second one.

Q Well, the purpose was to dispose of the stock which the promoters owned? A Yes, I think that is correct.

Q And whether the Taylor-Alcorn was the first syndicate or not you don't know? A I don't remember about that.

Q Well, what was the second syndicate, or the first syndicate, if the Taylor-Alcorn was not the first? A Well, I think the next syndicate, which ever was first, I think the next syndicate was the 40,000—no—I think after the first syndicate was the 510,000 shares. I think the Taylor-Alcorn syndicate, the Alcorn-Taylor, whichever it was, came first, and then I think after O'Bannon came in, the 510,000 shares.

By the Court.

Q You think that was the second? A I think so. I am not dead sure.

By Mr. Feick.

Q Wasn't there a third syndicate? A Yes. Then there was a syndicate of the 40,000 shares at $5, treasury.

Q Were there two syndicates previous to the syndicate for the 510,000 shares? A I don't remember one or two. I say, I don't remember.

Q It may have been one or two? A I don't remember which it was.

Q And they met with no success in disposing of the stock that belonged to the promoters? A No.

Q And for that reason a third syndicate was formed, or a second syndicate, whichever it might be, with reference to the 510,000 shares, is that right? A Yes, that was stock that was furnished by the promoters, put into that syndicate, the 510,000.

Benjamin F. Taylor, recalled, cross.

Q The promoters owned upwards of 510,000 shares? A Yes. There were six hundred thirty odd thousand shares that was escrowed.

Q And they disposed of that to this— A There was 510,000 shares contributed to this syndicate, for which $200,000 was paid.

Q By the syndicate members? A By the syndicate members.

Q And that syndicate is the one covered by the agreement of February, 1916? A I think it was early in 1916.

Mr. Arkush: Exhibit P. 29.

Q That is the agreement, P. 29, which is the last syndicate to which you referred, for the purpose of taking over from the promoters the 510,000 shares.

By the Court.

Q What is the date of that? A February 10, 1916.

Q And you think that the 40,000 share syndicate was before or after that? A I think that was after.

By Mr. Feick.

Q Now, under this syndicate agreement that purchased the 510,000 shares from the promoters? A This money went into the treasury.

Q Yes, but the stock was owned by the promoters and furnished by the promoters to the syndicate? A Correct.

Q So it was purchased by the syndicate members from the promoters and payment was made to the corporation? A It went into the treasury of the company.

Q For the purpose of raising further capital for the corporation? A Getting us on our feet.

Q At the request of the promoters. In other words, they said, "We will sell you this stock and you pay the company for further working capital for the corporation in which we are interested"? A They gave it to the company. The promoters gave that stock. They didn't get anything for it.

Q They contributed the proceeds, didn't they? A They gave the stock and that stock was sold to the syndicate.

Q See if this is not true. They owned that stock, which was issued to them when the corporation was formed in return for this property; isn't that true; the 510,000 shares, is that right? A Yes.

Q The company needed money and the promoters said, "We will contribute this to a syndicate, sell it to a syndicate in return for the syndicate furnishing $200,000 to the company," is that right? A Well, it went into the treasury of the company. The $200,000 went into the treasury of the company.

The Court: You see, we know that, but you are not answering the question, Mr. Taylor.

Q Those 510,000 shares did not go back to the company from the promoters, it came from the promoters to the syndicate? A Yes.

Q And in return for that transfer by the promoters to the syndicate, the syndicate at the request of the promoters handed $200,000 to the corporation for further working capital in a company in which the promoters were still in-

terested as stockholders, that is right, isn't it? A Yes.

Q Now, in addition to these various patents which Hudson Maxim transferred over, and these contracts, the company acquired other property, didn't it? A Yes. We acquired the Fuller plant at New Haven (are you talking about real estate) and the Hamilton-Brown gun, the air-cooled shoulder rifle.

Q Now, let us confine it to real estate. You bought a plant in Connecticut, didn't you? A We bought a plant at New Haven, the Fuller plant.

Q Then later you bought another plant, or earlier? A The next we bought was the drop forge plant.

Q Where was that? A That was in New Haven.

Q Derby? A No. The drop forge plant was in New Haven. Then after that we bought the Secor Typewriter plant.

Q So as you expanded and grew you acquired three plants, all of them in Connecticut; right? A Yes. We acquired those plants and we leased a plant at Watertown, New York, from the Wise estate.

Q You mean you leased a plant there? A We leased it. We didn't buy it. We leased it.

Q How long did you maintain the plant in New York? A I think the company—now, I can't say for sure, but my recollection is that the company was still operating that plant when I left them in the end of June, 1917. That is the Wise plant.

Q After that you don't know? A I don't.

Q But they didn't own that plant. They just had a lease on it? A They just had a lease on it.

Benjamin F. Taylor, recalled, cross.

Q The two plants they did own were in Connecticut? A Three.

Q The three they owned were in Connecticut? A Yes.

By the Court.

Q I did not get the name of the estate from which you leased the Watertown plant. A The estate? Wise.

By Mr. Feick.

Q Now, previous to the promotion of the syndicate in February, 1916—that is the 510,000 share syndicate—you went to Mr. O'Bannon? A Yes.

Q At whose suggestion was that? A Why, we were put in touch with O'Bannon through Esmond O'Brien, who was a director, I think.

Q I am asking you now whose suggestion it was. A Well, I think now it was Esmond O'Brien.

Q You had not met him before? A No.

Q Where was this that you saw him? A At his office in the Marbridge Building, at Madison Square, Fifth avenue.

Q The purpose of seeing Mr. O'Bannon was to see if you could dispose of some of the stock of the promoters? A No.

Q For raising capital for the company? A No, to see if we could interest Mr. O'Bannon in the company actively.

Q Oh, as a director or as an officer? A As an officer, also to get him to put some money in. We needed money.

Q What documents did you show him at the time? A I took him up the trial balance, general statement as of the 31st of December, 1915.

Benjamin F. Taylor, recalled, cross.

Q And the trial balance that you took to him and showed him you thought at the time was correct? A Yes, sir.

Q Did you certify to it? A I don't think I was asked to. I think we took it up to him and showed him the figures.

Q And you said, "These are correct." Have you got that trial balance here? A It was here yesterday. It is in evidence, I think.

Mr. Arkush: Exhibit P. 27.

Q Now, referring to Exhibit P. 27, is that the trial balance sheet that you showed Mr. O'Bannon? A Yes, sir.

Q And told him it was correct? A Yes, sir.

Q What else did you show him? A I don't remember if I had any other papers with me.

By the Court.

Q You told us yesterday Exhibit P. 25. A Oh, yes; there was a statement. In addition to that trial balance there is a statement.

By Mr. Feick.

Q You showed him Exhibit P. 25? A Yes; assets and liabilities, and the trial balance.

Q According to that statement, all of the capital stock of the corporation had been issued? A Yes.

Q Did you say anything to O'Bannon about the valuations placed on the property for which the stock was issued? A I don't remember that I did.

Q What? A I don't remember that I discussed that with him.

Benjamin F. Taylor, recalled, cross.

Q Do you know what became of Maxim's share? A Well, you see he contributed to this 510,000 share syndicate in proportion. That 510,000 shares was contributed pro rata to the syndicate, so that left Maxim with probably twenty or thirty thousand shares left out of his original ninety odd thousand.

Q Now, Maxim was the owner of some 93,000 shares? A Originally.

Q That belonged to him? That is right, isn't it? A Yes.

Q And he transferred them to the syndicate, or a certain portion of them? A No. That stock was all, it was all put in pool with J. Campbell Thompson. It was turned over to Campbell Thompson when this 510,000 share syndicate was formed.

Q But that was done for the purpose of transferring this stock to the syndicate and raising this $200,000, is that right? A Yes, on the participation certificates, you know, in this.

Q But Maxim's stock was his own stock and not that of the company? A It was all promotion stock. The syndicate was made up of that.

Q Now, the company continued in operation until after the war? A Well, they continued after I left it. I know that as a matter of hearsay, but I had no connection with the company after the latter part of June, 1917.

Q This bankruptcy did not come along until after the war? A I don't remember when they did go into bankruptcy.

Q You know they went into bankruptcy? A Yes.

Benjamin F. Taylor, recalled, cross.

By the Court.

Q Are you sure that Mr. Maxim contributed anything to the 510,000 share syndicate? A Yes. They all contributed.

The Court: I have before me here the order of the United States District Court, which gives the names of those who contributed to that 510,000 share syndicate. See if you find Mr. Maxim's name in that.

Mr. Arkush: He is using the word "contributed" in the sense that the promoters turned over an interest in their stock to that syndicate.

The Court: All right, but I am showing to him now a list which was stated in the order of the Referee in Bankruptcy of all those who contributed to that.

The Witness: These are the owners. These are the people who bought stock in this syndicate, not the contributors, but the owners.

Mr. Feick: I think, if your Honor please, that that list is those who purchased the promoters' stock.

The Witness: They purchased 510,000 shares.

Mr. Feick: Of promoters' stock.

The Court: Oh, yes, that is right.

Mr. Feick: Yes, they purchased the promoters' stock.

The Witness: Out of the syndicate.

The Court: No question about that.

The Witness: That is what this is, the list of the members of the 510,000 share syndicate.

The Court: It does not give the contributions, does it?

Mr. Arkush: No, sir; only in aggregate.

Mr. Feick: It might be well, if the Court please, to have entered on the record the members of the syndicate, of the syndicate of February, 1916.

The Court: All right, if you want to do that. Oh, this 510,000 share syndicate?

Mr. Feick: Yes.

The Court: That is February 10, 1916. Well, they appear in this pleading.

Mr. Arkush: Oh, yes, they appear in paragraph 15.

Mr. Feick: No, sir; they do not. That is the point. These are different than these. Mr. Fleissner's name does not appear on the syndicate agreement at all, what Mr. Fleissner did as to the purchase or interest of Mr. Palmer in that stock.

Mr. McCarter: Yes, the members of the syndicate changed and the original signers are the names that appear here. The ultimate members are the names in the court record. That is different there.

The Court: But they do appear. I mean there is no necessity of reading them into the record because they do appear in that.

Mr. McCarter: In that exhibit; yes, sir. These are the original members in that exhibit.

The Court: Yes. I see Mr. Fleissner's name is bracketed with Mr. Palmer's in this order which means, does it, that Mr. Fleissner acquired Mr. Palmer's shares? Is that admitted?

Mr. Feick: Yes, sir.

Mr. McCarter: One-half of his shares. Palmer sold out one-half to Oppenheimer, one-half to Fleissner. That is why that funny bracketing is there. You will see Palmer bracketed with Fleissner and Palmer bracketed with Oppenheimer.

The Court: That means that Palmer had 12,750 shares.

Mr. McCarter: Yes.

The Court: 6,375 of them went to Fleissner and 6,375 to Oppenheimer; is that right?

Mr. McCarter: Yes.

Re-direct examination by Mr. McCarter.

Q You have been asked, Mr. Taylor, about these different syndicate agreements other than the 510,000 share syndicate agreement. I show you a group of papers and ask you to tell me whether that is one of those syndicates, and if so which one. A This was known as the Alcorn-Moore syndicate originally, and then Moore dropped out and it was changed to Alcorn-Taylor.

By the Court.

Q You are the Taylor in that syndicate, are you not? A Yes. That was in November, 1915.

By Mr. McCarter.

Q These three documents, then, the original agreement, the assignment by Moore to Taylor, and the consent by the others to that assignment, together constitute what has been called the Taylor-Alcorn syndicate, is that correct? A The

Taylor-Alcorn or Alcorn-Taylor, I don't remember which way it was.

Q It was that syndicate, however you arranged the names? A Yes.

Mr. McCarter: Now, I offer that in evidence.

(The same is received in evidence and marked Exhibit P. 37.)

Q What action, if any, was taken under this Alcorn-Taylor syndicate, Exhibit P. 37? A I don't remember exactly.

Q Do you remember whether anything was ever done? A I don't remember whether anything was done or not under that agreement.

Q Now, I show you a document which appears to be dated June 22, 1916, and ask you whether that is the 40,000 share syndicate that you told us about. A Yes.

Mr. McCarter: I offer that in evidence.

(The same is received in evidence and marked Exhibit P. 38.)

The Court: Then that does seem to be the third after all; that is, the last one?

Mr. McCarter: Yes. It is not the last one, but the last one he knows anything about.

The Witness: It is the last one I know anything about.

By the Court.

Q I think you said that syndicate met with no success. A This one? Oh, yes; there were 40,000 shares sold, as I remember it, under this.

Is that right? 40,000 shares at $5 a share; yes, that is right.

Mr. McCarter: Now, as a matter of clarity and fairness I want to make it perfectly plain. Mr. Fleissner's name appears under this exhibit P. 38, but we are not making any claim against him under this. It is merely in as a matter of evidence bearing on the picture, but we are not claiming on this.

By the Court.

Q You mean out of this syndicate the company got $200,000? A Yes, out of this syndicate, out of this third syndicate, this one here.

Q You got $200,000? A $200,000.

Q And $200,000 out of the second syndicate? A Out of the second syndicate; that is right.

By Mr. McCarter.

Q Do you remember whether the company got anything, if so, what, out of the first syndicate, the Taylor-Alcorn syndicate? A I don't remember whether they did. I am a little bit hazy on that. I don't think it amounted to much.

Q Was Mr. Fleissner a member of the syndicate Exhibit P. 38 of June 22, 1916? A Yes, he had the $5,000 in there; a thousand shares, $5,000.

Mr. Feick: If the Court please, Fleissner's name appears here, but there is no proof that he signed it.

Mr. McCarter: I tried to save you that trouble, Mr. Feick, by saying a moment ago

that I am not claiming against Mr. Fleissner under that syndicate.

The Court: I suppose the purpose of introducing it is because it was brought out in your cross examination that these other syndicates were formed.

Mr. McCarter: We are not claiming under this stock at all. It is in the case for evidential purposes. We do not claim under the stock; that is all.

Q Do you know whether Mr. Fleissner was actually a member of this syndicate, Exhibit P. 38? A Well, his name is there and the books show that he paid $5,000, the cash books show—a note rather, he gave a note for $5,000, which was discounted. That is in that syndicate.

Q And did he receive some stock under this syndicate? A They all did, yes.

Q Did he? A I suppose he did. I don't know.

Q Did you hear the testimony yesterday that a thousand shares of stock were issued to Mr. Fleissner other than the shares we were suing on, so to speak? A Yes, I remember that testimony now.

Q Are those the thousand shares to which he was entitled under this syndicate? A Under that syndicate. That is the thousand shares he was entitled to under that syndicate brought out yesterday.

Q Referring to Exhibit P. 38, that syndicate? A Yes.

Q You said early in your cross examination in answer to a question of Mr. Feick that at the time of the organization of the company you were working on this Brown rifle which lies on

the table before you. To what extent were you working on or interested in the Brown rifle? A Well, we spent a good deal of money trying to develop it. That is, the company spent a good deal of money trying to develop it.

Q Were you ever able to develop it to any success? A No, not up to the time that I left the company. It never had amounted to anything. It wasn't successful.

Q I think at one time in your cross examination you referred to the United States Corporation Company as being the company that held the stock in escrow. Didn't you mean the United States Mortgage & Trust Company? A The United States Mortgage & Trust. The United States Corporation were the transfer agents. The escrow were all made with the United States Mortgage & Trust Company.

Q Now, you were asked about your knowledge of Hudson Maxim and his ability in various lines. Along what lines did you know that Hudson Maxim had made any inventions? A Well, it was generally known that he had invented smokeless powder. He had a big name in the explosive field. That is all I knew.

Q Did you know anything about his inventions or his reputation as an inventor in any field other than the explosive field? A That is all that I ever heard.

Q In fixing the value of nine hundred and some odd thousand dollars for these various things that the company got and which you issued stock for, as far as your conclusion was concerned, how did you arrive at such a large figure? A Based on the possibilities. I believed we were going to make a lot of money, and that we could develop that stock into real money.

Q And so far as you know what was the attitude of the other directors at the time? A I can't speak for them, but I imagine that that would be my impression. We had great faith in the future of the company.

Q Did you at any time think that the various properties that the corporation received, singly or altogether, had then a cash or market value of $10,000,000, or anything like that sum? A No, sir.

Re-cross examination by Mr. Feick.

Q Did you say based on the possibilities? A Yes.

Q So in placing a value on this property you considered what its value was, did you not? A More what it would be.

Q But you did consider it? A I considered it.

Q You gave serious consideration to the whole matter, didn't you, before you went into it; is that right? A Well, we considered it.

Q And as a result of this you decided that it was worth $10,000,000? A In stock.

Q Or cash? A It was stock that we had to consider.

Q Or cash. Your resolution said it was worth $10,000,000, is that right? A Cash or stock. That is what the resolution reads, doesn't it?

Q Now, where are these other directors? A I didn't get that.

Q Where are the other directors? A Where are they?

Q Yes. A Well, I will tell you as far as I know. Hudson Maxim is dead. Captain Angel is dead. Sweeney is somewhere in Europe.

Benjamin F. Taylor, recalled, re-cross.

By the Court.

Q Beckert? A I don't know where Beckert is. I haven't heard of him for years.

By Mr. Feick.

Q Is he alive or dead? A I don't know. The last I ever heard—now, this is gossip—that he was somewheres in Turkey for the Standard Oil Company.

By the Court.

Q The other three, Brown, Scully and Porter? A Brown is dead. Scully only served as a director for a short time; and Porter only was a director for one meeting. Then O'Bannon came in, and he is dead; and let us see—I don't remember who the other directors were.

Q You are practically the only survivor? A I am still here, and with a bad cold.

By Mr. Feick.

Q Where is Mr. Palmer? Do you know? A I don't know where Mr. Palmer is.

Q Is he dead, too? A I don't know. I haven't heard of him for years.

Q Now, you say that Mr. Fleissner had an interest in one thousand shares in the third syndicate? A Yes.

Q And those were the shares which the transfer sheet referred to and which Mr. McCarter said they were not making the basis for any claim for assessment. Do you remember? A Yes.

Q That was only one thousand shares? A That was one thousand shares.

Q And there were another thousand shares which Mr. Fleissner apparently purchased on the

open market? A I don't know anything about that.

By the Court.

Q And he had those two thousand shares, I understood you to say yesterday, in addition to the 6,375 which he acquired from Mr. Palmer, is that right? A That is what the books showed.

By Mr. Feick.

Q But the 6,000 shares that he acquired from Mr. Palmer were never transferred to him? A I don't know.

Q The record will show that. A The records would show that.

Q And the thousand shares that were transferred later were in connection with the third syndicate? A Yes.

Q And then the additional thousand shares which were transferred later to Mr. Fleissner had nothing to do with either of the syndicates? A Not that I know, no.

Q And the amount that was transferred to him earlier, the 957 shares, were the shares that he got under the Campbell syndicate of February, 1916?

The Court: You mean the Campbell Thompson?

The Witness: J. Campbell Thompson.

Q Of 1916? A Yes.

Q Is that right? A I think that is correct.

Mr. McCarter: I am now going to offer in evidence Exhibit D. 2 for identification.

That is the ledger sheet which referred to this second group of Fleissner shares, the 2,000 only.

(The paper previously marked Exhibit D. 2 for identification is received in evidence and marked Exhibit P. 39.)

LOUIS GUNTHER, recalled in behalf of the plaintiff.

Cross examination (continued) by Mr. Feick.

Q Now, Mr. Gunther, have you the transfer sheets with reference to the two blocks of a thousand shares each? A Yes.

Q That appeared yesterday as being transferred to Mr. Fleissner? A Yes.

Q Can you tell from whom they were transferred? A May I refer to this ledger sheet? The first thousand shares, certificate 3930 to 3934, from B. F. Taylor, assistant treasurer.

Q And the second thousand? A B. F. Taylor.

Q Individually? A Assistant treasurer.

Q You don't know whether those two batches were treasury stock, do you? A I don't know.

Q Now, the original 956 shares, I think you said, were transferred from a certificate? A 957.

Q 957, Hudson Maxim, of a much larger amount? A Yes.

Q That certificate was split up and allotted to various parties, is that it? A Yes.

Q Do you know whether that certificate to Hudson Maxim was an original issue? A No, sir; I don't.

Louis H. Gunther, recalled, cross.

Q Will your records show that? A I haven't got them here.

Q Do you know the date of that? A Not without having the certificate in my possession, no.

Mr. Arkush: The original 93,996?

Mr. Feick: Yes.

Mr. Arkush: It is on the sheet.

Mr. Feick: That was an original issue, was it?

Mr. Arkush: Original issue. You will find it on sheet No. 1, transfer sheet.

Q Have you got the cancelled stock certificates for the 2,000 shares? A I have no cancelled certificates.

Q Where are they? A Some of them are in Mr. Arkush's office.

Mr. McCarter: I don't believe I have those two blocks of a thousand shares.

Mr. Feick: As I understand it, you lay no claim on those 2,000 shares?

The Court: That is what Mr. McCarter said very distinctly.

Mr. Feick: I am so confused about all these here that I do not know which is which.

The Court: I understand there is no claim on the 957 shares.

Mr. McCarter: Oh, yes. The 957 shares are part of the 6,375. The fact is this Mr. Fleissner acquired in the syndicate an interest of 6,375 shares.

The Court: I observe he acquired them from Palmer.

Mr. McCarter: Yes, from Palmer, but in the syndicate.

The Court: Now, the testimony is that he acquired these 957 shares from Hudson Maxim.

Mr. McCarter: That is the record transfer, your Honor. I am trying to make it plain to you. What Mr. Fleissner acquired from Palmer was an interest in the syndicate before the shares themselves were split up. Mr. Fleissner got one of these J. Campbell Thompson certificates and then Mr. Fleissner, while he still held that, disposed of his shares till he had only left 957, and then the stage in the proceedings of the syndicate was reached when the then holders got actual certificates, and that is how he came to get the certificates for 957 shares.

The Court: So these are 957 shares which were contributed to the syndicate by Maxim?

Mr. McCarter: By Maxim, yes. In other words, it has a totally different history, each of these shares, with respect to the legal stockholder of record and the beneficial holder through the syndicate, and the 957 shares that Mr. Fleissner finally got legal title too, as well as beneficial title, came legally from Maxim, beneficially through Palmer.

The Court: Yes.

Mr. McCarter: And these other shares, while we think there is ownership of them, and all that is very important on the question of notice, we are not making any assessment on these shares, or no assessment has been made on those shares.

Louis H. Gunther, recalled, cross.

By Mr. McCarter.

Q You were asked by Mr. Feick, the gentleman who cross examined you, whether you could or could not trace these 2,000 shares as being part of the original issue of this treasury stock. If you sit down in the rear of the room and go through these transfer sheets you can trace those 2,000 shares back to the original ownership, can't you? A I probably can. I don't know if all the sheets are here.

Mr. Arkush: I think they are.

Mr. McCarter: Now, then, will you leave the stand and take a comfortable seat in the back of the room and see if you can trace these two blocks of a thousand shares each which on Exhibit P. 39 are in the name of Christian Fleissner, back to the treasury stock, back to their original source?

The Court: Before you do that I want to ask you a question.

By the Court.

Q Do your sheets there, your transfer sheets, show simply a record transaction, or can you tell us whether the certificates of stock were ever issued in accordance with your transfer and ledger entries? A They can tell whether the certificates were originally issued, yes.

Q Then can you tell us whether or not there was an original issue of an actual certificate of stock to Sweeney for 999,965 shares? A The records will show that.

Q Will you determine that and be ready to testify to it when you come back to the stand? A If I have all the sheets here.

HARRY A. STRACHAN, sworn in behalf of the plaintiff.

Direct examination by Mr. McCarter.

Q Where do you live, Mr. Strachan? A 14429-87th Road, Jamaica.

Q Were you ever connected with the Maxim Corporation? A I was.

Q When? A Beginning in the end of 1915 and from that time on to the date of bankruptcy.

Q What connection did you have? A I first was an inspector of some of their machinery, castings, and so on. Then I became purchasing agent. Later in August, 1916, I became the assistant treasurer and secretary, superseding Mr. Taylor as treasurer of the company.

Q Did you directly succeed Mr. Taylor in charge of the accounting records of the company and the correspondence, and so forth? A I did.

Q I show you Exhibit P 29, syndicate agreement dated February 10, 1916, and ask you if at any time you had anything to do with the operations of that syndicate? A I did.

Q When did you commence to have anything to with that? A In August, 1916.

Q At that time was a Mr. T. D. Palmer still a member of the syndicate? A He was.

Q Do you know whether Christian Fleissner at any time became interested in this syndicate? A He did.

Mr. Feick: I object, if the Court please. The records speak for themselves The question whether Fleissner became a member of the syndicate or merely purchased the

stock of Palmer— He never signed any syndicate agreement. He purchased Palmer's interest in the syndicate in the stock. That does not make him a member of the syndicate. That is a conclusion of law. This man says he was. He does not know. The facts speak for themselves.

The Court: I am inclined to sustain that objection.

Q I did not mean anything deep or abstruse by that. I mean did Mr. Fleissner ever purchase any part of Mr. Palmer's interest in the syndicate? A He did.

Q Do you now recall without refreshing your recollection just at what date that was? A It was in the end of 1916, but I couldn't tell you the month exactly.

Mr. McCarter: If your Honor please, by stipulation with Mr. Feick to save inconvenience to one of the Fleissner executors, I have here in my hand and I would like to have marked for identification a document which Mr. Feick will stipulate was produced here by Edward A. Pruden, administrator of the estate of Otto H. Oppenheimer, deceased, and was found by Mr. Pruden among the effects of Mr. Oppenheimer. I would like to have that marked for identification before I show it to the witness.

(The same is marked Exhibit P. 40 for identification.)

Q I show you Exhibit P. 40 for identification, Mr. Strachan, and ask you if by looking at that you can refresh your recollection as to the exact

time when Mr. Fleissner purchased Mr. Palmer's interest in the syndicate, or any part thereof. A In December, 1916

Q In December, 1916? A December 7th.

Mr. McCarter: I suppose I had better offer this in evidence.

(The same is received in evidence and marked Exhibit P. 40.)

The Court: What is the document?

Mr. McCarter: It is on the letterhead of J. Campbell Thompson. "Received from Otto H. Oppenheimer one escrow Maxim Corporation certificate standing in the name of Theodore D. Palmer, for 12,750 shares, and with the assignment endorsed on back thereof by Mr. Palmer to Christian Fleissner and Otto H. Thompson, per B., December 7, 1916."

Q I show you, Mr. Strachan, Exhibit P. 30, which his Honor will recall was identified yesterday as a sample of the Campbell Thompson escrow certificates. Do you recognize that? A Yes.

Q What is it? A This is the participation receipt issued by Campbell Thompson to each member of the syndicate.

By a Juror.

Q Which syndicate was that? A 510,000 shares

By Mr. McCarter.

Q Did you ever meet Mr. Fleissner? A Yes, sir.

Q In connection with his interest in this syndicate? A Yes.

Q When did you first meet him, and where? A In the offices of the Maxim Corporation, 120 Broadway, New York, some time in 1917. I would say in connection with this, but I had met Mr. Fleissner prior to that on his participation in the other—some of the other syndicates in which he was interested.

Q In what connection with this 510,000 share syndicate did you meet him early in 1917? A Well, in the first place each member of this syndicate donated for the benefit of the company fifty per cent of their holdings to Davis and Durkin.

Q Was that donation evidenced by a written instrument? A It was.

Q I show you a document and ask you if you recognize it, and if so, tell what it is. A This is the agreement under which one-half interest of each member of the 510,000 share syndicate was donated to Davis and Durkin.

Q Did Christian Fleissner sign that? A Yes, sir.

Mr. McCarter: I offer this in evidence.

Mr. Feick: May I cross examine the witness on this?

The Court: You may.

Cross examination by Mr. Feick.

Q Do I understand you to say that Mr. Fleissner signed that agreement? A Yes, sir

Q I see two signatures here? A Yes, sir.

Q Which one do you say is his? A That one (indicating).

Q You identify that as his signature? A Yes, sir.

By the Court.

Q Do you know his signature? A Yes, sir.

By Mr. Feick.

Q How do you know his signature? A I have seen it on notes and checks.

Q How many times? A Oh, fifty, seventy-five.

Q When? A 1917, 1918, and 1919.

Mr. Feick: No objection.

(The same is received in evidence and marked Exhibit P. 41.)

Direct examination (continued) by Mr. McCarter.

(Mr. McCarter reads Exhibit P. 41.)

Q Do you know whether that agreement was in fact signed by all so that it became effective? A It did become effective

Q After the signing of that agreement do you know what Mr. Fleissner's actual shareholding interest became? A 3,188 shares.

Q Now, what became of the stock donated pursuant to that agreement or release, whatever you want to call it? A Well, you refer to the half that was turned over to Everly M. Davis and Joseph A. Durkin?

Q Yes. What became of that? A 100,000 shares of that was donated to the treasury of the company and sold and the proceeds turned into the company.

Q To the rest what happened? A Each member of the syndicate first donated twenty per cent. of their holdings, and then another twenty per cent. of their holdings to be sold, and then the proceeds were turned into the company, and the company issued their notes to the holders for these amounts.

Q Wait a minute. I think you misunderstood me. Of the stock that went to Davis & Durkin, or whatever their names are, you say 100,000 shares were turned over to the treasury to sell? A Yes.

Q Of the rest of the stock that went to Davis & Durkin, what happened to it? A That was divided the same as the other members of the syndicate.

Q They became members of the syndicate then? A Yes.

By the Court.

Q Do you mean by that that left 410,000 shares to the syndicate? A Yes, sir.

Q And you say that twenty per cent. of that was what? A No. Everly M. Davis first— First of all 102,000 shares were donated. Twenty per cent. of the entire holdings was donated, not donated, but sold by the company, and notes issued therefor to the various members of the syndicate. Then Everly M. Davis contributed 100,000 shares, which was sold for the benefit of the company, and no notes issued therefor. Then the members of the syndicate promoted the sale of another 102,000 shares, for which notes were also issued for the proceeds. Then the third step was that one-half of the balance of the stock remaining in the syndicate was sold and notes issued therefor to the members and the other half was distributed to them.

By Mr. McCarter.

Q I do not know whether I asked you this or not, but is it a fact that after the execution of that last exhibit, Exhibit P 41, I guess it is, that Messrs. Davis and Durkin were treated as members of the syndicate? A Yes.

Q Did they actually become such members, however? A Yes.

Q Now, then, you have referred to certain other further consents or reductions. I show you a document dated July 20, 1917, purporting to be signed by Christian Fleissner, and ask you if that was signed by Mr. Fleissner? A Yes.

Mr. McCarter: I offer this in evidence.

(The same is received in evidence and marked Exhibit P 42.)

(Mr. McCarter reads Exhibit P. 42.)

Q I notice, Mr. Strachan, that throughout this document, Exhibit P. 42, it refers to the members of the syndicate and Everly M. Davis and Joseph A. Durkin. Do you know why they were treated a little separately from the other members of the syndicate? A No, I don't remember why that was done.

Q Now, what was done with this 100,000 shares of stock? A That was sold and the proceeds were put in the treasury.

Q Do you know what the proceeds amounted to? A Approximately $180,000.

Q Now, in 1917 was there any other reduction by the syndicate members of their holdings? A Yes.

Q Tell us about that? A Well, 102,000 shares of stock was sold and they realized about

$208,000, and notes were issued therefor to the various syndicate members.

Q Was there a written agreement? A There was a written agreement, yes.

Q Do you know to what extent that reduced Mr. Fleissner's holdings? A 637 or 638 shares. 637 shares.

Q Now, Mr. Strachan, I show you a document dated May 28, 1917, bearing a lot of signatures, and ask you if that is the agreement of May, 1917, to which you just referred? A It is.

Q I notice Christian Fleissner's name appears among the list of signatures. Is that his signature? A It is not.

Q I show you document attached to the first mentioned document, which has Christian Fleissner's name. Is that Mr. Fleissner's signature? A It is.

Mr. McCarter: I offer these two as one exhibit.

(The same are received in evidence and marked Exhibit P. 43.)

(Mr. McCarter reads Exhibit P. 43.)

By the Court.

Q Is that the agreement which yielded to the company $208,000? A Yes.

By Mr. McCarter.

Q Now, were there subsequently to July, 1917, any similar sales or reductions? A Well, there is a second sale of 102,000 shares.

Q Authorized by the July 2nd paper? A Yes.

Q Is there any further sale after that? A Yes.

Harry A. Strachan, direct.

Q I show you a document dated August 10, 1917, and ask you if that is signed by Christian Fleissner? A Yes.

Mr. McCarter: I offer that in evidence.

(The same is received in evidence and marked Exhibit P. 44.)

(Mr. McCarter reads Exhibit P. 44.)

Q Mr. Strachan, were all signatures actually obtained to that last exhibit, P. 44, so that that became effective? A They were.

Q Were they so obtained to Exhibit P. 43, the one next preceding? A Yes.

Q Have you made up, Mr. Strachan, for the convenience of the Court and jury, a little written resume of your testimony as to what happened to Mr. Fleissner's stock in this syndicate? A I did.

Q Is that it there? A That is it.

Mr. McCarter: This is not, of course, strictly entitled to admission if he objects to it, but it will be helpful I think, and I offer it in evidence. It has it down in black and white.

By the Court.

Q That summarizes the testimony you have now given with reference to these documents, Exhibits P 41, P. 42, P. 43, and P. 44? A It gives the amounts of the notes that he received from the sale of each, together with the number of shares.

Q Does it show the number of shares which he contributed to these syndicates? The income from the sale of each stock went to the treasury.

A I will check that in a minute. It shows the number of shares that went in on the 102,000 each time, and on the subsequent 87,000 where the stock was divided, but whether or not it shows the donation—

Mr. Arkush: Yes, it does.

The Witness: It does. Then it shows it all.

Q I don't quite understand from a reading of Exhibit P. 44, which is this last document which you identified, whether or not the contribution of 956 shares by Fleissner were all the shares he had or whether he still owned an equal number of shares in the company. A He had 1,913 shares all-told. 956 were sold and notes were issued therefor, and 957 is the certificate that you have had here today for 957 shares, which was issued to him

By Mr. Arkush.

Q It is the net amount remaining? A Remaining.

Mr. McCarter: I offer this in evidence.

Mr. Feick: I object, if your Honor please. The witness has testified to this and this is not any record of any kind. It is entirely inadmissible.

The Court: Well, it is admitted that it is not a record. It is admitted that it is nothing but a memorandum of the testimony which this witness has already given.

Mr. Feick: Very well. I will withdraw my objection.

(The same is received in evidence and marked Exhibit P. 45.)

By the Court.

Q According to this statement, that leaves, as you have just stated, at this time—that is, November 19, 1917—in the name of Mr. Fleissner 957 shares; is that right? A Yes, sir, your Honor.

By Mr. McCarter.

Q And the sums given at the first column to the right of the debt column show the several different numbers of shares out of his original holding of 6,375, which were at those different times turned over by him for sale under these several agreements? A They do.

By the Court.

Q 3,187 shares, which you say here were donated—those were the shares that went to Davis and Durkin under that agreement? A Yes, your Honor.

The Court: Wouldn't it be well to put right after that "Davis and Durkin"? I don't think there is anything on here to explain those three thousand.

Mr. McCarter: We will ask him to write down then. (To the witness) Put the words "Davis and Durkin" right after that in your own handwriting.

By Mr. McCarter.

Q Now, I show you Exhibit P. 36, being the stock certificate in the name of Christian Fleiss-

ner, which was identified yesterday, for 957 shares. That is the certificate for the 957 shares remaining after the Davis and Durkin donations, is it not? A It is.

Q Was that the only stock transaction with Mr Fleissner which was recorded on the stock records of the company? A No.

Q Did Mr. Fleissner have any other stock certificate except this one? A Yes.

Q What others did he have? A In the first and second syndicates?

Q Oh, yes. A A thousand shares each.

Q Let me change my question then. I overlooked that entirely. Is this the only part of Mr. Fleissner's interest in the total of 6,375 shares that appeared of record in the books of the company? A Yes, sir.

Q Of those shares that were donated as you described them in this last exhibit, Mr Fleissner received payment for some of them, did he not? A Yes.

Q These notes which are also recorded on this exhibit—are they the amounts that he received for these shares? A They are.

Q So the stock was not a gift or present by Mr. Fleissner to the company? A It was not.

Q Why was it that this 957 shares was the only part of Mr. Fleissner's holdings that was of record on the stock records of the company? A Because no certificates were issued. No stock certificates were issued for the 6,375 shares. It was a participation certificate issued by Campbell Thompson, and that participation certificate was gradually reduced, first by 3,187 shares to Davis and Durkin, then by 637, then by 638, and then by 956, which left only 957 to distribute to Mr. Fleissner.

Q Those various transfers were not recorded on the stock books of the company as distinguished from the syndicate records, of which J. Campbell Thompson is trustee? A They were not.

Q Do you know whether as a matter of fact the stock held by J. Campbell Thompson as trustee was all recorded in his name? A It was not.

Q Now, I show you a group of checks of Maxim Corporation made out to the order of Christian Fleissner and purporting to be endorsed by him, and ask you to tell me what they are. A Checks for interest on the notes that I have just testified to.

Q Which Mr. Fleissner received in payment for this stock, which possibly has improperly been described as donated? A Correct.

Q Are those Mr. Fleissner's endorsements on the back? A Well, that one is; that one is; that one is; that is, that is, that is.

Q You are not sure about that one. A That one is; that one is; that one is; that one is; that is, that is.

Mr. McCarter: I offer in evidence the checks which have been identified by the witness as being endorsed by Christian Fleissner.

(The same are received in evidence and marked Exhibit P. 46.)

Q I show you what is marked journal 1917 and 1918, and ask you whether you recognize that as the journal of the Maxim Corporation? A I do.

Q Was it kept by you or under your supervision? A Under my supervision.

Q Directing your attention to page 77 of the journal, was that page kept under your supervision? A It was.

Q What do those entries on that page record? A Three notes, $434.88 each, given to Mr. Fleissner in payment of the 637 shares which he permitted the company to sell for his account.

Q Now, I ask you to turn to page 82 of the same book Was that page also kept under your supervision? A It was.

Q Does that record anything with respect to Mr. Fleissner? A That records the notes, three notes, $350.79 each, given to Mr. Fleissner in payment of the stock which he permitted to be sold by the company.

By the Court.

Q 658 shares? A No, 638.

Q It is given here as 658 on your statement. It was not on the other one. It said 638 on the exhibit.

Mr Arkush: That is a stenographic error, your Honor. It should be 638.

By Mr. McCarter.

Q Correct that in your handwriting, please. It would not add up that way. Now, please turn to page 154-A and 154-B, the A page first; one at a time. Was that kept under your supervision as well? A It was.

Q Does that record any transaction with Mr. Fleisssner? Maybe it is B we have to turn to. I don't know. A No.

Q Turn to B, then. A Yes.

Q What does that disclose? A That discloses three notes, $407.21 each, given to Mr. Fleissner in payment of 956 shares of stock which he permitted the company to sell for his account.

Mr. McCarter: I offer in evidence these pages of the journal, 77, 82, and 154-B.

(The same are received in evidence and marked Exhibit P. 47.)

Q Now Mr. Strachan, other than the $200,000 originally paid by the syndicate to the corporation, and the $188,000 received by the corporation as the proceeds of the part of this stock which you called donated and the payments on which the company issued notes to the syndicate, did the company receive any money, property or other consideration from the members of the syndicate on account of their stock? A They did not.

Q Now, do you recall whether or not the arrangement with Mr. Maxim as evidenced by the agreements of September 9th and September 22, 1915, were at any time terminated? A They were.

Q Was Mr. Maxim paid any consideration, any return, after termination? A He was.

Q What? A Approximately $9,000. Mr. Maxim still was interested to the extent of some 22,000 shares that was in escrow with Campbell Thompson.

By the Court.

Q How much was he paid, did you say? A $9,000 and something.

Harry A. Strachan, direct.

By Mr. McCarter.

Q Did Mr. Maxim write any letter bearing on that withdrawal of the original arrangement, and cancellation? A He did.

Q I show you a document. Is that the letter he wrote? A It is.

Mr. McCarter: I offer that in evidence.

Mr. Feick: We object, of course, on the ground it is irrelevant and immaterial, unless it is connected up with Mr. Fleissner. It had not anything to do with his issue.

Mr. McCarter: Its importance is this, that part of the original property, so called, that this corporation got was this contract with Mr. Maxim, whether the contract was burdensome or not. Now, here is the ending of it on certain terms.

The Court: It will be admitted.

Defendants' counsel prays an exception to this ruling of the Court.

Exception noted as ground of appeal.

The Court: What is the date of that letter?

Mr. McCarter: August 21, 1916.

(Mr. McCarter reads Exhibit P. 48.)

By the Court.

Q Was that ever carried into effect? A It was.

Q Then having heard that letter, do you still say that Mr. Maxim continued to be the holder of 22,000 shares of the corporation, since this letter seems to make this the purchase, or his sale price for his stock holdings in the company? A

Yes. I said Hudson Maxim at that time held 22,000 shares of stock, and this $9,000 was paid to him for that.

By Mr. McCarter.

Q How was this price of $9,121.60 fixed? Do you know? Was it fixed at some rate per share, or what? A Why, no; I don't remember how it was fixed.

Q Do you recall whether it was the same rate per share as the syndicate of February, 1916? A Yes, I believe it was.

Q Have you examined the transfer sheets which are in evidence, showing the history of the legal record on the stock books of the company for the shares comprising this 510,000 share syndicate of February 10, 1916? A I have.

Q I show you a typewritten table. Does that table show on paper the devolution of the record ownership of the shares of stock comprising that 510,000 share syndicate as made up by you from the original records? A It does.

Mr. McCarter: I offer that in evidence.

Mr. Feick: I object, if the Court please. I do not want to make it any more difficult for the jury to get the true picture, but this statement does not contain and give the names of the persons to whom the certificates were issued. It merely gives the numbers and therefore means nothing.

(Counsel argue.)

Mr. McCarter: We cannot put it in now. I will withdraw it now.

Q Did you purchase any of the machinery and equipment of the company? A All that it

purchased from the time I became purchasing agent early in 1916.

Q Did you sell any of the equipment and machinery when it disposed of the same? A I did.

Q What have you been doing since the bankruptcy of the Maxim Corporation? A Business manager of the United States Cartridge Company, appraised their machinery, purchased their machinery, sold their machinery. Subsequently I was with the National Surety Company, and now am division manager for the Ironrite Ironer Company of Detroit, Michigan.

Q Did you personally inspect any of the machinery, equipment and tools listed in the deed from Fuller Manufacturing Company to Maxim Corporation, Exhibit P. 20, which I now show you? A I personally inspected all of this machinery and equipment.

Q Now, will you state what, in your opinion, was the fair market value of the machinery, equipment and tools listed in the deed, Exhibit P. 20, other than the equipment described at the middle of page 6 of the deed, beginning with the words, "One two-hundred horsepower Heine Return Tubular Boiler," and ending with the words, "suspended near roof in middle stairway," and also except one hydraulic elevator dismantled, six by six hydraulic Deane elevator, such valuation being as of the fall of 1915?

Objected to as irrelevant and immaterial.

Objection overruled.

Defendants' counsel prays an exception to this ruling of the Court.

Exception noted as ground of appeal.

A I made up detailed appraisal of this machinery. It amounts between twenty-nine and thirty thousand dollars.

Q Did the company afterwards sell this plant up there in New Haven? A It did.

Q The plant described in that deed, Exhibit P. 20? A It did.

Q When? A Some time in 1917. I would have to look at the record to get that.

Q I show you a document that appears to be an agreement of sale between Maxim Corporation and A. C. Gilbert Company, and I ask you whether by looking at that you can refresh your recollection as to the exact date when the Maxim Corporation disposed of the plant described in Exhibit P. 20? A December, 1916.

Q What was the sale price or how much less than the purchase price was it? A About $70,000.

By the Court.

Q Less? A Less.

By Mr. McCarter.

Q Now, I show you an agreement dated November 18, 1916, purporting to be signed by a great number of people, and ask you whether Christian Fleissner's signature appears there or not. A It does.

Mr. McCarter: I offer this in evidence.

(The same is received in evidence and marked Exhibit P. 49.)

Mr. McCarter: I might read it to you. It is not so very long.

The Court: I wondered if you could tell shortly for the record.

Mr. McCarter: It is another syndicate agreement.

The Court: Has that reference to the 957 shares of stock still owned by him?

Mr. McCarter: No, this has reference to the second lot of 2,000 shares held by Mr. Fleissner on which no assessment was made. Mr. Taylor testified to a syndicate agreement of June, 1916, under which Mr. Fleissner got the first thousand of those 2,000 shares at $5 a share in both cases.

The Court: All right.

Mr. McCarter: It shows whereas the corporation now holds as treasury stock 173,000 shares, there is in escrow 642,000 shares not available for sale, and 185,000 shares now outstanding and Fleissner is a member of this syndicate.

By Mr. McCarter.

Q I show you Exhibit P. 39, Mr. Strachan, a ledger sheet showing two different items of 1,000 each shares of stock in the name of Mr. Fleissner. Can you tell us whether or not the stock therein recorded is the stock which he received under the syndicate of November and of June, 1916? A Yes.

Q Do you know whether Mr. T. D. Palmer is living or not? A He is dead.

Q Showing you Exhibit P. 49, Mr. Strachan, which is the syndicate agreement of November, 1916, and with special reference to some of the recitals, I ask you whether any of the three plants referred to in the third whereas on page 1 of the agreement, the Fuller plant, the Seward plant and the Secor plant, are any of the

properties that were acquired by the corporation at the time of the original issue of stock? A Whether any of these were?

Q Yes. A No, the Fuller plant, there was a contract for the Fuller plant at the time of the issue of the stock, but the plant was not owned.

Q And the Seward plant and Secor plant—when were they acquired? A Subsequent to that time.

Q Now, I notice in the next recital it says that on or about the 9th of October, 1916, the corporation acquired by lease for a term of two years, with the right and privilege to purchase at any time within that period, a certain munitions plant in the City of Watertown, New York, known as the Wise plant. Was that acquired at the time of the original issue of stock? A It was not.

Q I note in the next recital it recites that, "The corporation has an order with the Royal Danish Government for 30,000,000 cartridges, upon which order deliveries are now being made, against which an established credit was fixed by the Royal Danish Government with the National City Bank of New York for the full amount of said order, of which a payment of $345,000 was made available to the corporation for the purchase of materials in connection with the said contract." Was that contract part of the property acquired at the time of the original issue of the stock? A It was not.

Mr. Feick: This witness was not with the company at the time of the original issue of stock.

The Court: I suppose if he was with the company at the time it was acquired, he could testify.

Mr. Feick: He has not testified to that.

The Court: He said, I think, he came with them at the end of 1915.

Q When was the Danish contract that I just read to you acquired by the company? A About October or November.

By the Court.

Q What year? A 1915.

Q You weren't with the company then? A I would have to get the exact date. I think I was, your Honor.

By Mr. McCarter.

Q Were you there with the company when the company entered into a contract with the New England Westinghouse Company for the manufacture of bayonets, to be employed by it in filling an order of the Russian Government? A When was that entered into?

Q On the 19th of April, 1916, as stated in Exhibit P. 49? A Yes.

Q Were you with the company when it entered into a contract with one of the largest foreign automobile manufacturers to furnish it with finished and unfinished forgings for automobile parts? A I was.

Q When was that contract entered into? A In 1915.

Q The next recital is that, "Whereas the corporation is now engaged in filling numerous other orders for cartridges and munition parts," —were any orders than these hereinabove enumerated obtained after you were in the company? A Yes. The contract with the Italian—the contract with Officine di Villar Perosa.

Q Was it obtained after you were with the company? A It was.

Q This recital continues, "The company has in prospect large additional orders of this nature." Do you know whether or not in November, 1916, there were any large additional orders in prospect? A November, 1916; yes.

Q Were they ever obtained? A Obtained one of the United States Government for the manufacture of 45-calibre cartridges.

By the Court.

Q 45? A Yes, sir; pistol cartridges.

By Mr. McCarter.

Q Did you perform that contract? A It was completed for us by the United States Cartridge Company.

Q Did any of these contracts or orders which have been mentioned in Exhibit P. 49, which I just talked to you about, have any relation to any of the inventions or other alleged assets mentioned in Exhibits P. 4 and P. 5, which you will recall were the letter of Sweeney and the letter of Maxim accompanying the letter of Sweeney at the time of the organization?

Objected to.

The Court: I think that question ought to be whether or not he knows.

Q Do you know whether they do? A I do.

Q Do they? A They do not.

Q Did you know Captain Beckert and Captain Angel? A I did.

Q Do you know what branch of the military service of the United States they were in or had been in? A Infantry.

By the Court.

Q Both of them? A Both of them.

Cross examination by Mr. Feick.

Q Mr. Strachan, when did you come with the Maxim Corporation? A In the end of 1915.

Q Can you make that a little more definite? A Oh, about November, 1915.

Q As an inspector? A Yes, sir.

Q What were your duties? A Oh, I inspected castings and machinery for them.

Q Did you have anything to do with getting any contracts? A No.

Q Did you know anything about what contracts they had? A I did.

Q How did you know that? A Why, I worked very closely with Edward H. Beckert for a great number of months prior to that time.

Q Prior to what time? A Prior to the time that I was with the Maxim Corporation.

Q So what you are testifying to now is something you have heard from Beckert as to the contracts with the company, is that so? A I did not sign any contracts of the company at that time.

Q But you are speaking now of what you heard Beckert tell you before you came with the company, is that right? A About what?

Q About the contracts of the company? A No, there was only one of these contracts in which that could be the case.

Q What one was that? A The Danish contract.

Q You did not know anything about that except what you heard from Beckert? A Well, Beckert and others in the company.

Q And they told you at a time when you were not employed by the company? A They did.

Q So, so far as that is concerned, it is merely hearsay, isn't it? A No, I also knew Captain Peterson of the Danish Government.

Q Your testimony here as to these contracts is based on what you heard from officers and members of this company? A Only on the one contract.

Q How about the ones that were made after you came with the company? A Well, that I knew all about.

Q How did you know about that? You had nothing to do with them, did you? A I did.

Q What did you have to do with those contracts? A I had to purchase all the supplies for them.

Q Did you have anything to do with making those contracts for the company? A Some of them, yes.

Q Which ones? A The bayonet contract.

Q What did you have to do with that? A Why, I was with Mr. O'Bannon. I bought the steel for it. I figured out with some of their engineers in the plant what would have to be done in order to manufacture the bayonets.

Q Was that steel purchased before the contract was made? A No.

Q It was done after the contract was made? A Purchased, yes, but an option was obtained before the contract was signed.

Q Did you know of the making of the contract? A I did.

Q Did you have anything to do with the making of the contract? A I was called in by Mr. O'Bannon. That contract was made by Mr. O'Bannon.

Harry A. Strachan, cross.

Q You did not know anything about it except what you heard from Mr. O'Bannon? A Well, I knew the price and so forth, had the contract in my office, saw it.

Q After it was made? A Yes.

Q Do you know when it was made? A Yes.

Q When? A Well, I don't remember. It is of record here. I would have to look it up.

Q You don't know that, do you? A Well, I did at the time.

Q You remember some of these other things as of the present time. Now, let us see here. This contract with the Royal Danish Government for 30,000,000 cartridges—that was the contract that was made, wasn't it? A Yes.

Q Was that before you were with the company or after? A I believe that was slightly before I was with the company.

Q And you know nothing about that contract; you don't know how long they had had it? A Well, I know the date it was signed.

Q When was it signed? A Well, I don't know. I would have to look it up.

Q You just said you knew. A I said I knew when it was signed. I was advised when it was signed.

Q You were told by somebody else when it was signed? A Yes.

Q But there was that contract, wasn't there? A Yes.

Q And that was there before you came? A I think the Danish contract was signed before I was with them.

By the Court.

Q What is that? A I think the Danish contract was signed before I was with them. It was very close to that time.

Harry A. Strachan, cross.

By Mr. Feick.

Q How about the contract of April 19, 1916, with the New England Westinghouse Company? A Well, that is the contract for bayonets. I know all about that.

Q They made that on April 19, 1916? A Yes.

Q That was made after you came? A Yes.

Q That was a very valuable contract, wasn't it, for this company? A No, sir.

Q It was not? A No, sir.

Q Did you approve of it? A No, sir.

Q You had nothing to do with making the contract, did you? A Why, yes.

Q What did you have to do with making the contract? A Well, I had to secure the option on the steel and the other things. That was in consultation with Mr. O'Bannon about it at the time.

Q What did you have to do with making this contract? A I did not sign it.

Q And you had nothing to do with making it, did you? A I did not perfect the sale, no.

Q Did you have any negotiations with the Danish Government or the Westinghouse Company? A Yes.

Q You did? A Yes.

Q With whom? A Colonel Wilson.

Q What is his first name? A I can't tell you.

Q When? A Oh, during 1916.

Q When during 1916? A Probably as early as May, June.

Q In 1916? A Yes.

Q And the contract was made April 19, 1916. It was after the contract was made, is that right? A That I negotiated?

Q Yes. A Yes, with Wilson.

Q So you had no negotiations with reference to the making of this contract? A Well, I had the contracts in my hands before it was made or signed.

Q Before it was signed? A Yes.

Q I am asking you what negotiations you had with the Westinghouse people? A I did not have any.

Q With reference to the making of this contract? A I did not have any. I had negotiations with them in fulfilling it.

Q In carrying the contract out? A Yes.

Q In other words, your duties were not related in any way with making these contracts for the corporation? A Not at that time, no.

Q When were they? A After August, 1916.

Q Then your duties included the making of contracts for the company? A Yes.

Q Which ones did you make? A Well, I did not make any of them, but I signed all of them.

Q You just said that after August, 1916, it was one of your duties to make this contract for the company? A No, I said that it was part of my duty to have some of the negotiations.

Q Leading up to the making of the contract? A Yes.

Q Which ones? A Well, the one with Officine di Villar Perosa.

Q What did you have to do with that? A I interviewed Mr. Joseph S. Josephs about it a number of times.

Q You mean as to how it was to be carried out? A The terms and conditions of it.

Q And you approved the terms and conditions? A Why, not singly.

Q Did you approve the terms and conditions? Did they meet with your approval? A Yes.

Q They did. It was a good contract, was it? A Well, I thought so at that time, yes.

Q When was that contract made? A 1917.

Q You thought it was a good contract at that time? A Yes.

Q And so did everybody else connected with the company, didn't they? A The Italian contract, yes.

Q The what? A The Italian contract, yes.

Q Isn't that the one we are talking about? What was the one you were talking about? A Just now, yes.

Q That was the one? A Yes.

Q Now, these recitals in Exhibit P. 49 as to the contracts that the company had—will you tell me whether you say that they were true or untrue? A Why, they had these contracts.

Q They had these contracts, didn't they? A Yes.

Q And isn't that the reason that they needed more cash? A Yes.

Q And that was why the recital was put in the escrow agreement, wasn't that it, showing the need for more cash, what they were going to do with it? A Yes.

Q Then all that you mean to say is that these contracts were not with the company at the time the company was formed? A Yes.

Q But that is correct and a true statement of what they had and why they needed the cash? A Certainly.

The Court: Does that agreement of November 18, 1916, Exhibit P. 49, provide for the giving of notes also?

Mr. Arkush: No, cash.

The Court: Does it provide for the making of notes?

Mr. Feick: This was cash, your Honor.

The Court: I mean notes to Mr. Fleissner.

Mr. Arkush: He did give a note, but it was not provided for in the agreement. This was a cash transaction.

Mr. Feick: I believe not. I believe it was cash.

By Mr. Feick.

Q These contracts that were recited in Exhibit P. 49 required a good deal of cash to fill, isn't that true? A They did.

Q And that is why the company needed the cash, to fill those contracts? A Yes.

Q How about the real estate that your company owned? That was all in Connecticut, wasn't it? A Yes.

Q They owned nothing in New York? A No.

Q And the plant was in Connecticut? A Except later on the Wise plant.

Q And they had a two-year lease on that? A Yes.

Q But the plants that they owned were three plants out in Connecticut? A Yes.

Q And all of your machinery? A Yes.

Q And all of your equipment, and all of your manufacturing was done up in the State of Connecticut? A It was.

Q Was your company listed in the New York telephone book in 1915 or 1916? A In 1916, yes, but whether the book was issued in the end of

1915 I can't answer, whether they got in there or not, but I think it was.

Q Where was their office in New York? A 120 Broadway.

Q Whose office was it? A Maxim Corporation.

Q Wasn't it the office of this man Thompson? A No, it was not.

Q You are speaking now of the time that you went with the company in 1916, is that right? A In 1915 I went with the company.

Q Now, you say that Mr. Fleissner purchased Mr. Palmer's stock in the syndicate of February, the first syndicate? A Yes.

Q You say he purchased that in December, 1916? A Yes.

Q That is right? A That is correct.

Q And that consisted of 6,200 shares? A 6,375.

Q So that in December, 1916, Fleissner became the owner of 6,375 shares by purchase from Mr. Palmer, who was at that time the owner, is that right? A Yes, correct.

Q Now, after Mr. Fleissner had purchased this stock the company was in business, taking on contracts, and needed capital, is that right? A Correct.

Q And for that reason they had to get more money to finance their operations, is that right? A Yes.

Q And in that connection they went to their stockholders and asked them how more capital could be raised, and the stockholders agreed among themselves to contribute and turn back to the company some of the shares that they had purchased and to lend the company the proceeds

of the sale, taking the company's notes? A No, that was later.

Q What was earlier? A Why, the first agreement, the first underwriting was after they contributed $200,000, that they would take 40,000 shares at $5.

Q Now, wait a minute. That was another syndicate agreement? A Yes.

Q I am talking now of the stock that was purchased by Palmer and then purchased by Fleissner from Palmer under the syndicate agreement of February, 1916? A Yes.

Q Now, let us confine ourselves to that. Forget about the 40,000. The company needed cash to finance its operations? A Yes.

Q And it went to these stockholders, who were, of course, as stockholders interested in the success of the enterprise? A Yes.

Q And it said to these stockholders, "We need more cash"? A Yes.

Q "Now, what are we going to do?" And the stockholders said, "We will contribute some of our shares, or we will lend you the money which we can get from the sale of some of the shares that we have"? A Yes. Not contribute. They agreed to permit the sale of twenty per cent. of their holdings, for which they were to receive notes.

Q So as a matter of fact what they did, they practically sold a portion of the shares that they had under the syndicate agreement and loaned the money for the proceeds of the sale to the company, is that right? A Correct.

Q And reducing their shares accordingly so that as a matter of fact they substituted the company's notes in some respects for the stock that they owned? A Right.

Q Is that right? A Correct.

Q Now, the amount that the company agreed to pay was the amount for which the stock was sold? A Correct.

Q The stockholders who furnished that capital made no profit on it, did they? I mean, the stock was not sold for less than the company agreed to pay them? A No. It was not sold for less.

Q It was a charitable act to the company to furnish the capital necessary to finance these new enterprises? A Well, they got more in the notes than the stock cost them originally. They got $2 a share as against 40 cents.

Q They owned the stock originally, didn't they? A They paid 40 cents a share into the treasury for it.

Q They owned the stock originally, didn't they? A Yes.

Q And then they sold that stock on the market? A Yes.

Q They had a perfect right to do that, didn't they? A Yes.

Q And the proceeds of the sale, which was legally theirs and belonged to them, they loaned to the company? A Yes.

Q Is that right? A That is what the agreement amounted to.

(At one o'clock P. M., the Court takes a recess until two o'clock P. M.)

AFTER RECESS.

HARRY A. STRACHAN, resumes the stand in behalf of the plaintiff.

Cross examination (continued) by Mr. Feick.

Q Now, in Exhibit P. 45, which is a statement made up by you of what happened to the stock of Mr. Fleissner, the 6,375 shares, you scheduled nine notes? A Yes.

Q Aggregating $3,590.64? A Yes.

Q The interest was paid. I think you produced checks for the payment of interest on those notes? A Some of them.

Q Were some of the notes paid? A I don't remember that. I would have to look at the books.

Q Have you got the book here?

By Mr. McCarter.

Q Does the cash book show that, the journal, or what? A Why, I think I would have to have the ledger in order to get the record of it first.

Mr. Arkush: All we know is how many notes Mr. Fleissner had in the bankruptcy suit.

Mr. Feick: And the others were paid. What was the amount of those?

Mr. Arkush: We have those.

The Court: The amount of indebtedness was $1,442.63 in the bankruptcy proceedings.

Mr. Arkush: We have certified copies of the proofs of claim. Here are copies of the notes attached.

Mr. Feick: May it appear, then, on the record that of these nine notes shown on Exhibit P. 45—

Mr. Arkush: Of course there were a great many renewals, you know. They were all short term notes.

Mr. Feick: The following notes were not paid: One dated March 4, 1919, for $260, payable on July 5, 1919; another the same date, for $174.88, payable on July 5, 1919; another dated March 24, 1919, for $350.79, payable July 22, 1919; another dated April 23, 1919, for $350.79, payable August 23, 1919; and the other dated May 21, 1919, for $350.79, payable on September 22, 1919.

Mr. McCarter: Now, there should be this change in the notice on the record, that of the notes shown in Exhibit P. 45, or the renewals thereof—then go on.

Mr. Feick: Yes.

By Mr. Feick.

Q And the other notes shown in this exhibit were paid? A Well, they were paid or disposed of by Mr. Fleissner, I presume.

Q The company's obligation was relieved on all of those notes except the ones that are proved? A As far as I know.

Q You, I think, were vice-president at one time? A Yes.

Q When were you vice-president? A Oh, I don't remember.

Q What? A I don't remember. Some time between the fall of 1916 and the other times. We changed officers from time to time. They brought a man by the name of Rowland, George

Rowland, into the company to be treasurer of the company, and they made me vice-president at that time.

Q And you came with the company as an inspector? A Yes.

Q Does the company owe you any money? A Yes.

Q How much? A Oh, six or seven hundred dollars.

Q Now, these agreements that were signed by Fleissner and the other stockholders under that syndicate agreement of February, 1916, whereby they agreed to sell some of their stock and lend the money to the company, were those agreements signed, do you know, by Mr. Fleissner, together with the others at the same time, or were they sent around for the signatures of the various people who were signing? A They were sent around for the signatures. They weren't all signed simultaneously.

Q There was no meeting of them? A No.

Q They were sent from one to the other? A Yes, sir.

Q When did you make the appraisal of the machinery and assets in Connecticut? A Oh, about three or four years ago.

Q Three or four years ago. That would make it about 1924 or 1925? A Yes.

Q You had made no appraisal of the company's assets prior to that time? A You mean as to the Fuller plant exclusively?

Q I mean of what the company had, the assets in the way of machinery and manufacturing plants? A Why, some of it at various times, yes.

Q When did you make the first appraisal? A In 1917 or 1918.

Q Can't you fix it any nearer than that? A Not without consulting some records, I could not.

Q Have you got those records here? A I doubt it.

Q Well, suppose you look.

Mr. Arkush: What is it the witness wants?

The Witness: Why, the date of the contract with the United States Cartridge Company, if you could give me that.

Mr. Arkush: October, 1917.

The Witness: October, 1917.

Q And that was the first appraisal you made of the company's assets, machinery and working plant, and so forth? A That I personally made, yes.

Q That is what I asked you. Where were these assets at that time? A Some of them were in Derby.

Q Connecticut? A Connecticut, yes. And some of them were in Lowell, Massachusetts.

Q Any other place? A Yes, some of them were at Watertown, New York.

Q What was the occasion for that appraisal? A The United States Cartridge Company had entered into an agreement with the Maxim Corporation that it was necessary to know the value of some of the machinery for the carrying out of the agreement.

Q Was that an appraisal of all of the assets of the company or only of some of them? A Only of some of them.

Q Only some of them? A Yes.

Q When was the first time that you made an appraisal of all of the assets of the company

in the way of machinery and working equipment? A I did not ever make it all at one time.

Q You did not know then, before July, 1917 (I think that was the date), as to what the value was of the assets of the company in the way of working equipment and machinery, and so forth? A Not all of it.

Q Only some of it? A Well, I had been over the plant, purchased a large portion of the machinery myself, and examined all the machinery that they had, but I did not make up any actual appraisal of all of the machinery at any one time.

Q You first came there in 1915? A Yes.

Q As an inspector? A Yes, sir; and at that time I examined all the machinery in the Fuller plant.

Q In the Fuller plant? A Yes.

Q Oh, not any other machinery? A Not at that particular time.

Q Later on you did? A Yes.

Q You don't know from your own examination what the condition of the machinery and assets was and what they consisted of at the time that the company was formed in August, 1915, do you? A Yes.

Q How do you know that? A They did not have any.

Q How did you know that? Tell us how you know that. A Because I have had the Fuller deed and the Fuller deed was not—the contract was not closed for the Fuller plant at the time of the formation of the company, and the other plants were not purchased until subsequently, and I have had all the deeds and so forth in my possession.

Q You did not come there until later in the fall of 1915, did you? A I did not.

Q So you don't know what the company had at the time it was formed? A Yes, I do.

Q How do you know that? A Because I have had the deeds to all of their property in my possession and read them.

Q But you did not see these assets and machinery at that time, did you? A Yes, I saw the plants—I saw the machinery at the Fuller plant before the deal was closed for the plant.

Q When was that? A In the fall of 1915.

Q Did you make an appraisal at that time? A I did not.

Q How long were you with the Maxim Corporation? A From the fall of 1915 until the date of bankruptcy.

Q After that what did you do? A I was business manager of the United States Cartridge Corporation.

Q Prior to your coming with the Maxim Corporation, what did you do? A I was in the brokerage business, a fruit packing business.

Q And prior to the time that you were in the brokerage business and fruit packing business, what did you do? A Well, that goes back for about thirty years.

Q Oh, you mean the fruit packing and the brokerage, you were in that for thirty years prior to the time you were with the Maxim Corporation? A No, I did not say that at all. I say that takes you back about thirty years. I went in the fruit packing business in 1899, I think it was.

Q You continued in the fruit packing business until when? A About 1915.

Q And then you came to the Maxim Corporation? A Yes.

Q When were you in the brokerage business? A In there during that period.

Harry A. Strachan, cross.

Q You were in the fruit packing and a broker? A Yes.

By the Court.

Q What kind of broker? A Fruit broker.

By Mr. Feick.

Q You testified that you had experience in appraising machinery and equipment? A Yes.

Q I think that was after you left the Maxim Corporation, wasn't it? A That I had experience?

Q Yes. A Why, yes.

Q And prior to your coming with the Maxim Corporation you had no experience in appraising machinery used for the purpose of making munitions and guns and matters of that kind, is that right? A Why, I was conversant with the machinery and was purchasing it during that period with the Maxim Corporation.

Q I asked you what your experience was before you came to the Maxim Corporation. A Well, I had charge of a plant, a fruit packing plant.

Q Did that have anything to do with the mnaufacture of munitions and machine guns and things of that sort? A No. I was also an inspector of the Bureau of Combustibles for four years.

Q When? A In 1896 to 1899.

Q That was before you became a fruit packer? A Yes.

Q And as an inspector of the explosives, you had nothing to do with inspecting machinery for the purpose of making machine guns and explosives? You were inspector of the manufactured

products, of the explosives, weren't you? A No, the machinery too.

Q Both? A Yes.

Q And that was back in 1895? A Yes.

Q And from that time on you had no experience at all in the purchase or sale of machinery of this type? A No.

Q Until after you came with the Maxim Corporation? A Correct.

Q Now, in speaking of these escrow agreements, what did you have to do with those—or the syndicate agreement of February, 1916? A Why, I took charge of the issues of all of the notes on the division of stock and wrote the letters on it to Campbell Thompson. As assistant treasurer of the company I signed many of the papers and attested many of the papers in connection with them.

Q You were doing that at the same time that you were going out inspecting and appraising machinery, is that right? A I was doing the purchasing at that time for the Maxim Corporation.

Q That did not have anything to do with the machinery and equipment? A I purchased the machinery and equipment, yes.

Q At that time? A Yes.

Q At the same time you were working with these securities here? A Yes.

Q Jack of all trades, weren't you? A Yes. I worked eighteen hours a day average, Sundays and holidays included.

Q When was that? A All through the war, through my term of office with the Maxim Corporation.

Q They were busy, weren't they? A Busy sending out notes.

Q Busy manufacturing too, weren't they? A No. We did not turn out much stuff.

Q How about the Danish Government contract? A Did not ever finish it.

Q Who finished it for you? A Did not finish for us. The contract was cancelled by the Danish Government.

Q The company went bankrupt? A No, sir. The Danes took the contract away and went down and had the cartridges manufactured by the Remington Arms Company.

Q I notice I see you have got 3,187 shares donated. A Yes, sir.

Q To Davis and Durkin? A Yes.

Q Who were Davis and Durkin? A Davis and Durkin were—Everly M. Davis had been in the, I can't think of the name of the concern, a large chemical company or company that had completed a contract, munitions contract, and Durkin was the production man. Davis was the money man.

Q In the other outfit? A Yes. And the idea was that if they came into the Maxim Corporation they might be able to get us some production.

Q Now, these shares were donated by the owners of the stock, is that right? A Yes.

Q For the purpose of getting the services of Davis and Durkin? A Yes.

Q Or permitting Davis and Durkin to sell the stock, I suppose? A No, the stock of Davis and Durkin was escrowed and was not to be given to them until the escrow agreement was terminated.

Q Do you know whether it was terminated? A Why, yes, when this distribution was made it was terminated.

Harry A. Strachan, cross.

By the Court.

Q What distribution do you mean? A I mean the distribution under which Fleissner got his 950 shares, Davis and Durkin got the balance of theirs, and all the syndicate members got the balance of theirs. Davis and Durkin were always treated as a syndicate member.

Q I don't understand that the Davis and Durkin stock was ever turned back. Was it? A No, sir; part of it was.

Q That was turned back for cash, wasn't it? A No. A hundred thousand shares was sold and the money that was realized went into the treasury.

Q For notes or for no return? A For no return whatever. Now, that left Davis and Durkin 155,000 shares of stock. Of those 102,000 shares, Davis and Durkin contributed 51,000 shares and got notes for it.

Q That is a subsequent one? A That is a subsequent one. Then that left them 53,000 shares, of which one-half was sold and notes issued for it, and the other half was given to Davis and Durkin, the same as the 957 was given to Fleissner.

Q 26,500? A 26,500.

By Mr. Feick.

Q Were you a stockholder of this company at any time? A Subsequently.

Q To what? Subsequently to what time? A Why, in about 1918 or 1919. 1918.

Q You purchased your stock? A No, sir.

Q Was it given to you? A Mr. O'Bannon made me a present of 5,000 shares of the stock of the company for services rendered, both to him personally and to the company.

Q That was O'Bannon's stock, wasn't it? A Yes, sir.

Re-direct examination by Mr. McCarter.

Q You say that the company owed you several hundred dollars. Have you filed any claim in bankruptcy? A No, sir.

Q Are you interested in any way in the outcome of this suit? A No, sir.

Q Now, you have testified, in answer to questions by Mr. Feick, with respect to the various contracts mentioned or named in Exhibit P. 49, and I understand that the Danish contract was the only one of those contracts that was actually entered into before you became connected with the company. Is that correct? A Correct.

Q But you saw the Danish contract in process of performance? A I did.

Q And did you see the other contracts in process of performance? A I did.

Q Now, did any of those contracts, Danish or otherwise, have anything to do with the Brown air-cooled shoulder machine rifle? A No.

Q Did any of them have anything to do with an improvement in position indicators? A No.

Q Or any improvement in periscopes? A No.

Q Or any improvement in range finding guns? A No.

Q Did Mr. Hudson Maxim himself have anything to do with the performance of any of these contracts? A No.

JAMES G. GRAHAM, the plaintiff, sworn in his own behalf.

Direct examination by Mr. McCarter.

Q Mr. Graham, where do you live, sir? A Newburgh, New York.

Q Are you the plaintiff in this case? A Yes, sir.

Mr. McCarter: I wish at this time to offer in evidence a copy of the certificate of the change of name of the Maxim Munitions Corporation, duly exemplified under the great seal of the State of Delaware, to Maxim Corporation. The "Munitions" is just deleted. That is all that is done.

(The same is received in evidence and marked Exhibit P. 50.)

Mr. McCarter: I offer in evidence a copy, duly certified under the seal of the United States District Court for the Southern District of New York, of the adjudication in bankruptcy of the Maxim Corporation.

Mr. Feick: If the Court please, I object on the ground that the order or decree is not admissible unless the proceedings leading up to the matter be also offered. We are here concerned with the question of the jurisdiction of the New York courts, and we are entitled to have the proceedings offered in the regular way, and the order alone means nothing.

Mr. McCarter: As a matter of fact, this is admitted on the record. Due adjudication in bankruptcy is admitted on the record

in this case. Mr. Feick was not the attorney at the time the pleadings were filed.

The Court: What paragraph of the complaint?

Mr. McCarter: Paragraph four, and in answer to that he says that he admits that involuntary petition in bankruptcy was duly filed against the corporation on or about May 29, 1919, in the District Court of the United States for the Southern District of New York, and such proceedings were duly had thereunder that on or about June 2, 1919, the corporation was duly adjudicated a bankrupt.

The Court: With that admission the adjudication will be admitted in evidence.

(The same is received in evidence and marked Exhibit P. 51.)

Mr. McCarter: I also offer in evidence copy duly certified under the seal of the same court, of the order of reference of the said bankruptcy cause to Peter B. Olney, Jr., Referee in Bankruptcy.

Mr. Feick: If the Court please, I object on the ground that the order of reference is undoubtedly offered in connection with the proceedings for this assessment, and to do that they must offer the entire record; that is, the petition and the pleadings leading up to the adjudication to inform the Court whether or not the court in New York had jurisdiction, what the assessments were, and how the matter was brought about. The offer of the order of reference alone is not admissible.

The Court: The trouble is, Mr. Feick, as has been suggested, you have admitted this,

that an involuntary petition in bankruptcy was duly filed against the corporation on or about May 29, 1919, in the District Court of the United States for the Southern District of New York, and such proceedings were duly had thereunder, that on or about June 2, 1919, the corporation was duly adjudicated a bankrupt. So you have admitted the regularity of those proceedings and the adjudication.

(Counsel argue.)

(Objection overruled.)

Defendants' counsel prays an exception to this ruling of the Court.

Exception noted as ground of appeal.

(The same is received in evidence and marked Exhibit P. 52.)

Mr. McCarter: Now, I offer in evidence copy of the same bankruptcy cause of the petition for assessment of stock, copy being certified to by Mr. Olney as Referee, and he being certified to by Mr. Gilchrist, the clerk of the court; petition of the trustee for assessment on stock.

Objected to on the ground that the entire proceedings in the bankruptcy matter should be offered in evidence, and on the ground that the New York courts had no jurisdiction to make an assessment in New York against a corporation of the State of Delaware, and that the proceeding must be instituted and brought in the state of domicile, and not in a foreign jurisdiction.

Objection overruled.

Defendants' counsel prays an exception to this ruling of the Court.

Exception noted as ground of appeal.

(The same is received in evidence and marked Exhibit P. 53.)

The Court: I suppose as these proceedings—namely, final petition of the Trustee and the adjudication of the Referee—are objected to for the same reason, if they are offered.

Mr. Feick: Yes, and for the following additional reasons, if the Court please. We say that the bankruptcy court under the Bankruptcy Act had no jurisdiction to make a valid assessment in this case by reason of the fact—

The Court: Perhaps then you had better raise that when the assessment is offered, unless it applies, you think, right now.

Mr. Feick: I think it applies to the entire proceedings. By reason of the fact that this stock was issued as full paid and non-assessable under Section 14 of the Delaware statute, and that under that section the stock is not assessable except in the case of actual fraud on the part of the directors. Now, we say that that cannot be decided in the bankruptcy proceedings by a petition of the Referee, under Section 23-B of the Bankruptcy Act. Section 23-B expressly provides that a proceeding of that kind must be a plenary proceeding in the proper form on the service of proper process on the defendant and a due opportunity to be heard, and we say that an adjudication of this kind to be admissible in this case is a violation of the rights of the defendant under the United States Constitution and State Constitution,

the right to trial by jury, the right to a day in court, and to due process of law.

I will cite to your Honor some cases, if you would like to hear them.

(Counsel argue.)

The Court: I assume that you are arguing a little ahead now.

Mr. Feick: I may be, sir, but it seems to me it goes to the entire offer here.

The Court: Suppose, Mr. McCarter, that I assume that you are going to offer these papers. Did you answer this subject of notice by mailing?

Mr. McCarter: I will put the papers in right now. I will offer them right now. I now offer in evidence copy duly certified by the Referee and his authority certified to by the Clerk of the Court, over its seal, of an order to show cause directed to Christian Fleissner among others, made upon the petition Exhibit P. 53.

The Court: Mark that for identification for the present.

(The same is marked Exhibit P. 54 for identification.)

Mr. McCarter: I will offer copies similarly certified of answers filed by several of the respondents to the petition in Exhibit P. 53.

The Court: Of whom I understand the defendant here was not one. Mr. Fleissner was not one.

Mr. McCarter: He was not one.

The Court: No answer was filed as to him.

Mr. McCarter: No, sir.

Sophia F. Hess, direct.

(The same is marked Exhibit P. 55 for identification.)

Mr. McCarter: And I also offer in evidence a copy similarly certified of the order levying an assessment on capital stock, another copy of which is annexed to the complaint in this action.

(The same is marked P. 56 for identification.)

SOPHIA F. HESS, sworn in behalf of the plaintiff.

Direct examination by Mr. McCarter.

Q Miss Hess, where do you live, please? A 8722 135th street, Richmond Hill, Long Island.

Q Were you ever employed in the office of Mr. Arkush? A I was.

Q Did you at any time mail to Christian Fleissner a copy of Exhibit P. 53 for identification and of P. 54 for identification, which I now show you? A I did.

Q Do you recall when you did that, Miss Hess? A On June 24, 1925.

Q To what address did you mail it? A I am not sure, but I think it was 125 Railroad avenue.

By the Court.

Q 125 what? A 125 Railroad avenue; somewhere over in Jersey, I am not quite sure.

By Mr. McCarter.

Q You don't recall the city? A No, I am not sure.

New Jersey State Library

Sophia F. Hess, cross.

Q I show you Exhibit P. 53 for identification on page 16 thereof where the name of Christian Fleissner appears, and ask you if that address given opposite his name refreshes your recollection as to the address to which you mailed the documents you testified to? A It does, and that was the address to which it was mailed.

By the Court.

Q Well, what was it? A 125 New Jersey Railroad avenue, Newark, New Jersey, is the address it was mailed to.

Cross examination by Mr. Feick.

Q That was about five years ago, wasn't it? A Four years ago.

Q How do you remember the address? A Well, it just—

Mr. McCarter: She did not.

The Witness: I had to have it recalled to me.

Q Did you put this in the post office yourself? A I did.

Q Did you address the envelope, too, yourself? A I did.

Q Did you put the enclosures in? A I did.

Q You had a great many at that time? A I did.

Q How many were there? A I couldn't tell you exactly how many.

Mr. Feick: That is all.

Mr. McCarter: Now, I offer all of these in evidence.

The Court: Is there any proof that that was the post office address of Mr. Fleissner in the case?

Mr. McCarter: It appears in the syndicate agreement.

The Court: Signed by him?

Mr. McCarter: Yes, that address is given. That address is also in the stock ledger, Exhibit P. 39. If the Court please, I offer in evidence Exhibits P. 35 for identification to P. 56 for identification.

(Counsel argue.)

The Court: Have you stated your reasons as fully as you want to?

Mr. Feick: I have stated most of them. I want to be sure to get this one on the record, that we contend that to admit these records in evidence and to hold and to give the effect to them that is asked for would be a violation of the defendant's rights under the Fifth and Fourteenth Amendments to the United States Constitution, paragraph 1 of Article I of the New Jersey Constitution, and the Seventh Amendment of the United States Constitution, under Article I, paragraph 7 of the New Jersey Constitution.

I want to say furthermore, sir, that it developed that that was not Mr. Fleissner's address at the time that that notice was mailed. Mr. Fleissner's son is here in court and is prepared to testify as to what his father's address was.

I furthermore want to point out, and I think this makes a great difference, that Mr. Fleissner at the time of the institution of

the bankruptcy proceedings was not a stockholder, and so far as the cases are concerned the stockholder is a nominal part of the corporation, so that the giving of mere notice by mail has no application in this case.

The Court: The exhibits, P. 53. P. 54, P. 55 and P. 56, for identification, will be admitted in evidence.

Defendants' counsel prays an exception to this ruling of the Court.

Exception noted as ground of appeal.

(The papers referred to are received in evidence and marked Exhibits P. 53, P. 54, P. 55 and P. 56, respectively.)

The Court: I wish you would refer me again to the document signed by Fleissner which states 125 New Jersey Railroad avenue, Newark, New Jersey, to be his address.

Mr. McCarter: There are two of them. There is No. 1, Exhibit P. 39.

The Court: That is 121 New Jersey Railroad avenue.

Mr. McCarter: My understanding is it is all the same building, just like the Prudential Building, sometimes 763, sometimes 765, and sometimes 767, but it is all the same building. This also gives 121.

The Court: None of them give 125?

Mr. McCarter: No, nothing gives 125.

By Mr. McCarter.

Q Mr. Graham, when you entered upon your duties as Trustee in Bankruptcy, did you discover that the bankrupt had some interest in or

claim to certain collateral securities deposited to secure a refunding bond executed by the bankrupt to the Officine di Villar Perosa? A Yes.

Q In round numbers what might that interest amount to? A Something over $700,000.

Q What did the contract with the Villar Perosa refer to? A Well, the manufacture of cartridges by the Maxim Corporation.

Q For whom? A For the Villar Perosa.

Q Had that something to do with the Italian Government? A It was assumed to represent the Italian Government.

Q Now, had there been delays in the deliveries and was there some attempt by the Villar Perosa to cancel the contract? A Yes.

Q What did you as trustee do in that situation?

Mr. Feick: What is the materiality of this?

The Court: I do not see, Mr. McCarter, I am just wondering.

Mr. McCarter: I will explain just exactly, your Honor. We wish to show why it was such a long time before the assessment was made after the qualifications of the trustee.

The Court: Will that be questioned?

Mr. McCarter: They pleaded the statute of limitations in this case, and we wish to show the reason why the assessment was not levied until the time it was levied.

The Court: I am just wondering if the statute of limitations applies prior to the levying of the assessment.

Mr. Arkush: We have New Jersey decisions which hold that the statute does not

begin to run till the levying of the assessment. There is, however, some authority of considerable weight coming up from other states where it was held that under the law of those states the statute began to run at the time the deficiency in the assets became apparent.

The Court: Is there any such decision in the law of Delaware?

Mr. Arkush: There is no decision in the law of Delaware either one way or the other on that subject.

The Court: And the decision in New Jersey is that the statute begins to run at the time of the assessment?

Mr. Arkush: Yes, sir.

The Court: Well, that being the case, I see no reason why—

Mr. McCarter: Certainly, and I say it is offered in support of our contention that the statute does not run. I guess I am safe enough in not pressing it.

The Court: If that question is raised I will say it will be without prejudice to a subsequent offer of this same exhibit.

Mr. McCarter: Now, I call upon the attorney for the defendants to produce the demand for payment of assessments, of which I served him notice.

Mr. Feick: What is that?

Mr. McCarter: I served you with notice to produce, among other things, the demand for the payment of the assessment.

The Court: Is that admitted?

Mr. Feick: We have not got it.

Mr. Arkush: No, they deny it, sir.

Mr. Feick: We have not the demand for payment.

The Court: Its production was demanded of you?

Mr. Feick: Yes.

By Mr. McCarter.

Q Mr. Graham, I show you a document on your letterhead and ask you what that is? A Well, demand for payment to me as trustee of the amount of certain assessments that were made against the stockholders. This is the form on which the demand was sent to each stockholder against whom an assessment was made, the amount being placed in the blank left in the demand.

Q In other words, that was a printed form which was properly filled out for each particular stockholder? A That is it.

Q Did you instruct Mr. Arkush to mail the demand? A I did.

Q Did you know of any address for Christian Fleissner other than 121 or 125 New Jersey Railroad avenue, Newark, New Jersey? A No.

Mr. McCarter: I would like to have this marked for identification.

(The same is marked Exhibit P. 57 for identification.)

Mr. McCarter: I now offer in evidence a copy duly certified by the Referee, whose authority is certified to by the Clerk of the Court under its seal, of proof of the claim of Christian Fleissner filed in these bankruptcy proceedings.

Sophia F. Hess, recalled, By the Court.

(The same is received in evidence and marked Exhibit P. 58.)

Cross examination waived.

The Court: I would like to ask Miss Hess one or two questions.

SOPHIA F. HESS, recalled.

By the Court.

Q Do you recall in what kind of envelope the rule to show cause and notice of assessment, which was directed to Mr. Fleissner at 125 New Jersey Railroad avenue, was enclosed? A You mean the size of the envelope?

Q No. What was on the envelope besides the address of Mr. Fleissner, if anything?

Mr. Arkush: Perhaps it would help your Honor. It was a registered letter and we got a registered receipt, but it was not signed by Mr. Fleissner.

The Court: That is not just what I am inquiring about.

A Well, I am not quite certain, but as far as I can recall it, it was an envelope of Ralph M. Arkush, 37 Wall street, New York, I think in the left-hand corner.

Q Upper left-hand corner? A Upper left-hand corner.

Q Just that or any other words on it? A I am not certain as to just what else. There would not be anything else on it if it was a Ralph M. Arkush envelope.

Q Is that all? A Ralph M. Arkush, 37 Wall street, New York.

Sophia F. Hess, recalled, By the Court.

Q Do you know whether that envelope and contents were ever returned to Mr. Arkush? Do you know whether it was or not? A No, I don't offhand.

By Mr. McCarter.

Q I show you, Miss Hess, a regular form of registry return receipt, bearing number 11, 193, and ask you if you remember what that was for? A I do. A letter was registered and return receipt requested, and this is the return receipt which was returned to Mr. Arkush's office.

Mr. McCarter: I offer that in evidence.

(The same is received in evidence and marked Exhibit P. 59.)

By Mr. Feick.

Q How do you know that this card came in return for the envelope that you mailed with the order to show cause and the petition? How do you connect the two up? A In just what manner do you mean that?

Q Why do you say that that was the registry receipt for the envelope that you sent some time before? A Let me see it. The envelope I sent was sent on June 24, 1925. The return receipt is stamped Newark, June 25, 1925, and it is signed Christian Fleissner, by somebody else, C. Fleissner J.—it looks like junior.

By the Court.

Q C. Fleissner, Jr.? A It looks like it, doesn't it?

By Mr. McCarter.

Q Did you mail anything else to Mr. Christian Fleissner in June, 1925, except the documents which you have already testified to? A I did not.

Q I show you, Miss Hess, a carbon copy of an affidavit of Nida M. Roat. Did you prepare this document? A I believe I did.

Q Do you see in that list the name of Christian Fleissner opposite the number 321,661? A I do.

Q And what is that number, 321,661? A Registered article number.

Q Do you see that number, 321,661, on the registered return receipt, Exhibit P. 59? A I do.

Q Does that further refresh your recollection that this is the registry return receipt for the papers which you have testified you mailed to Christian Fleissner? A It does.

HELEN V. LEE, sworn in behalf of plaintiff.

Direct examination by Mr. McCarter.

Q Miss Lee, were you ever employed in Mr. Arkush's office? A I was.

Q Were you so employed in August, 1926? A Yes, sir.

Q I show you Exhibit P. 57 for identification. Tell me, did you ever mail a document like that with the blanks filled in to Christian Fleissner? A Yes, I did.

Q Do you remember when? A August 28, 1926.

Q What address did you mail it to? A I don't remember the address.

Q I show you Exhibit P. 53 and invite your attention to the first line on page 16 thereof, and ask you if that refreshes your recollection as to the address to which you mailed, as you say, a copy of Exhibit P. 57? A Yes, it does.

Q To what address did you mail it? A 125 New Jersey Railroad avenue, Newark, New Jersey.

Q Did you deposit it in the United States mail yourself; you mailed it yourself personally? A Yes, I did.

Q Postage fully prepaid? A Yes.

Mr. McCarter: I offer Exhibit P. 57 in evidence.

(The same is received in evidence and marked Exhibit P. 57.)

LOGAN CRESAP, sworn in behalf of plaintiff.

Direct examination by Mr. McCarter.

Q Commander Cresap, were you formerly an officer of the United States Navy? A Yes, and I am an officer in the United States Navy.

Q What rank do you hold? A Commander.

Q Were you educated in the United States Naval Academy? A I entered the Naval Academy in 1901, graduated in 1905.

Q And served in various commissioned ranks in the United States Navy up to and including the rank of Commander, which you hold now? A Yes, sir.

Q As part of your naval professional educational experience in serving in the navy, have you had experience in navy ordnance, such as cannons, guns and things of that nature? A I specialized in navy ordnance and control, what are known in the navy as control apparatus; that is, apparatus for operating ordnance and hitting with.

Q By control apparatus does that mean range finders and things of that nature? A Yes. All apparatus dealing with location in hitting of the enemy.

Q I suppose that includes periscopes? A It does.

Q You have served on submarines sometimes? A Yes.

Q Have you at the request of counsel for the plaintiff in this case examined— A In answering your question in the affirmative that I have had experience in that apparatus, I might say that we have in the navy a branch or corps of specialists who specialize, over and above the ordinary officer, in those particular things, and I am a graduate of that special course.

Q How extensive a course is that, so far as time is concerned? A About eighteen months.

Mr. McCarter: At this point I wish to offer in evidence a certified copy of letters patent to the United States granted to Hudson Maxim July 7, 1912, No. 1,031,279, for improvement in a combined multi-barrel gun and range finder. Your Honor will recall that number ties up with Maxim's contract.

(The same is received in evidence and marked Exhibit P. 60.)

Q Now, Commander, I show you Exhibit P. 60 and ask you if at the request of counsel for the plaintiff in this case you have made an examination of Exhibit P. 60 and of the so-called invention therein described and depicted? A I have.

Q Tell us briefly what it is. A It is a gun of unstated calibre containing six barrels, and the prime purpose of the gun is to attack aircraft.

By the Court.

Q A revolving gun? A No, sir, it is not a revolving gun. The object of the six barrels, five of which are grouped in a circle around a central barrel, and those five are hinged at the rear, and the object of the multi-barrel principle, according to the patent, is to control the parallelism of the five circumferencial barrels with reference to the central barrel so that those five barrels can be expanded radially or brought together, so as to spread or concentrate the fire. That appears to be the prime purpose of this gun. The object of that movement of the barrels is to encompass a larger area for the purpose of hitting. He accomplishes the expanding—or rather, the movement of the circumferencial barrels is so arranged that when the target is close to, the barrels are expanded so that they operate at a larger angle from the axis of the piece, and at a greater range the barrels are brought together so as to concentrate the fire. Now, the degree of concentration or expansion is controlled by a ring which slides forward and back on this central barrel, and it has a front sight on that ring, and as you slide the ring to the rear towards the operator of the piece, you expand these circumferencial bar-

rels. Now, one of the claims of the patent is that by having the front sight in the form of a ring and by advancing or bringing closer to the operator's eye this peep sight, that by so placing that ring that the outlines of the target are just encompassed by the hole in the peep sight, that the motion to do that will automatically place these barrels radially in the proper position to encompass the target also with the hits—that is to say, the inventor essays to adjust this ring some distance from the rear sight so that by his eye and the beams of light, the peep sight will just encompass the target; and in doing that, advancing or retracing this ring and adjusting the barrels radially, he will automatically place that ring in such a position that the expansion or contraction of the barrels will likewise enclose the target.

By the Court.

Q Is that what he calls the range finder? A That is what he calls the range finder, range finding principle in this piece. Now, those are the objects of the piece.

By Mr. McCarter.

Q What have you to say, Commander, as to the practical utility of that invention described in that patent, for naval purposes?

Mr. Feick: If the Court please, we have had this character of testimony before, and I don't know whether my general objection to it has been noted. We object on the ground it is irrelevant and immaterial. It goes to the matter of fraud and over-valuation, which

is not an issue in this case, and it is not tied up in any way with the defendant.

Objection overruled.

Defendants' counsel prays an exception to this ruling of the Court.

Exception noted as ground of appeal.

A In the first place the patent does not give any idea of the calibre of this gun. You must infer the calibre.

By the Court.

Q Is it drawn to scale? A It is not drawn to scale; no, sir. It probably is drawn to scale, but the scale is not noted. The scale is not given on the patent drawing as a rule. Anti-aircraft guns divide themselves mainly into two classes of piece.

The Court: I wonder if you can answer the question directly.

Q (Read by stenographer.) What have you to say, Commander, as to the practical utility of that invention described in that patent, for naval purposes?

The Court: I suppose that calls for the answer whether it is or is not practical in the first place.

The Witness: Yes, sir, that is what I am trying to do.

By Mr. McCarter.

Q Is it or is it not of practical utility? A I don't consider it of practical utility.

Q Was it in September, 1915? A No.

Q Why not? A In the first place, it does not fit in with the generally accepted principles upon which anti-aircraft ordnance was then being designed, and now is for that matter, too. To strike an aircraft, which is a very fast moving object, is an exceedingly involved problem in gunnery. It is the most complex of all gunnery problems, and the guns that have been developed and were then being used for this purpose divide themselves into two classes. One class is a small calibre exceedingly rapid fire gun, which you might say parallels a hose which shoots a continuous stream of small bullets, and by tracing those bullets through the air you can gradually bring your stream onto the target. The other class of anti-aircraft guns is a larger calibre piece that fires singly but carries a heavy explosive and creates a larger disturbance. Now, all anti-aircraft ordnance is of that nature. It is either the small hose principle, or it is the larger gun which gets up to be three or four or five inches of diameter of shell, to create a heavy disturbance. Now, this gun does not fit into either of those two classes. It evidently is not so small as to compete with the machine gun because of the method of loading the gun, and it must all be hand operated, by the drawing, and any hand operated gun could never begin to compete with an automatic machine gun which fires anywhere from four or five or six hundred shots a minute. This gun could not possibly be used by hand and reach, with its cluster of barrels, faster than I should say forty or fifty shots a minute at most. So it does not fall into that class of gun. The other class that attempts to shoot a larger shot and depends on

the disturbance created, must be fired at a lower rate. Now, that gun must be coupled with quick and easy movement, because aircraft travels so fast. Now, this gun by having six barrels, to use a technical expression, would have a very large moment of inertia—that is to say, it would be clumsy to operate. It would be a clumsy thing, and it could not compete with a single-barreled gun. Therefore, it does not fall into either of the commonly-accepted types of guns that are used.

By the Court.

Q Is the weight of this gun indicated? A No, sir. The weight is not indicated, but the design would fix a ratio between the total offensive discharge of weight and the weight of the gun. Then the other objection is that the range-finding feature—that is to say, the adjustment of this peep sight to a distance from the rear sight, which would just enclose the target, is of no value at all, and apparently it neglects the fundamental principle that the angular displacement of the target is a triangulation of the angle of presentation to you.

Q That is all right for a still object, isn't it, the peep sight? A A peep sight is all right, but I am referring to the adjustment on distance of the peep sight in the range-finding principle. The peep sight is an excellent principle. If you look at the Shenandoah, the Los Angeles, or a dirigible balloon, if you look at her end on, she looks like a circle. If you look at her broadside to, she looks like a cigar. Now, she will displace angularly one angle when she is head on to you, and she will displace another angle when she is broadside to without changing her distance at all.

Therefore, if you adjust the peep sight ring so as just to include the Los Angeles when she is broadside to, that ring would be a certain distance from the eye, and her bow and her stern would just be within the circle. Now, if the Shenandoah were to then turn around and face you without changing her range from you at all, it is quite clear that that setting of the peep sight would not then just encompass her diameter, because the ratio between her diameter and her length is about eight hundred to one. She is something like seven hundred feet long, I think, and about eighty-five or ninety feet beam. Now, those are the two reasons why that gun—those two features, the multi-barreled principle and the range-finding principle, are valueless. No military officer who was responsible for the defense of any object would ever think of selecting that type of gun as his means of defense.

Q Now, one minute. All this is intensely interesting, but of course counsel must decide what is essential to his case. A Certainly.

Q And I fear that that is not essential. A Yes.

Mr. McCarter: I now offer in evidence certified copy of letters patent to the United States issued to Hudson Maxim, No. 1,310,200, granted July 15, 1919, for the improvement in position indicators or recorders.

The Court: 1919?

Mr. McCarter: That is when it is granted, yes. The application was made in December, 1914, and the application number was 877,328.

(The same is received in evidence and marked Exhibit P. 61.)

Mr. McCarter: I offer in evidence certified copy of letters patent to the United States issued to Hudson Maxim July 15, 1919, No. 1,310,201, on application No. 879,466, filed December 29, 1914, for improvement in position indicators or recorders.

(The same is received in evidence and marked Exhibit P. 62.)

Mr. Feick: My objection may be noted, your Honor?

The Court: Yes, your objection may be noted.

(The Court takes a recess until tomorrow morning, Wednesday, April 24, 1929, at ten o'clock A. M.)

THIRD DAY.

Wednesday, April 24, 1929.

LOGAN CRESAP, resumes the stand.

Direct examination (continued) by Mr. McCarter.

Q I show you, Commander, Exhibits P. 61 and P. 62, being patents numbers 1,310,200 and 1,310,201 respectively, issued to Hudson Maxim for improvement in position indicators or recorders, and ask you whether you have, at the request of counsel for the plaintiff in this case, examined the alleged inventions therein described? A I have.

Q What do they describe? A These two patents very closely relate to each other, one

being an improvement of the other, a modification of the other, and describe a mechanism for mechanically making a trace on a chart to scale of the path of a vessel—that is, without any human agency.

By the Court.

Q The vessel being observed or the vessel in in which it is installed? A The vessel in which it is installed. Now, it does that by having a pencil which is circumscribed by suitable mechanisms to the propeller shaft, and as the propeller revolves it actuates certain mechanism and advances its position supposedly in proportion to the speed of the vessel and it advances the pencil in a straight line. Underneath the pencil is a chart and that chart is carried on top of a magnetic or gyroscopic compass so that the chart is turned in relation to the turning of the ship. Now, every time the ship turns the patentee wants to make a tracing by this pencil advancing. Now, you can see that as the pencil goes forward and it does not change its relative motion with the ship, it will trace the paper that changes when the ship changes her course. Now, if the ship changes her course and the pencil does not move during that period, then there would be a circle traced on this rotary piece of paper, and then the pencil would go on and that would trace a line on the chart which would not follow the actual path of the ship because of the rotary action of the paper, but if when the pencil is advanced and then the ship starts to turn you allow the pencil to go around with the paper while the ship is turning, and then continue to advance the pencil, you will create a trace on the paper which is similar to

and approximately like the actual trace of the ship in the water. Now, that is the essential point of this patent, and I think we had better stress that. As you advance that pencil—if you don't move the pencil when this paper is turning you will make a circle on this paper just as I have drawn it here. Then as the pencil continues it will go on with another line. Now, that will make a trace which will be a trace not only of the path of the ship, but also of the turning of the paper. Well, he wants to eliminate the turning of the paper from the trace. Therefore he starts out and moves the pencil in accordance with the ship. Then when the ship starts her course and the paper starts to turn around, he, by certain mechanism essays to hold the pencil to the paper while that chart is being revolved, and then after the revolution of the chart has ceased, which is caused by the movement of the ship, then he permits this pencil to go on.

By the Court.

Q That is the improvement? A No, sir; that is not the improvement.

Q That is in the original? A That is the original patent. Now, to do that you must have some mechanism which will permit this pencil to move when the chart wants it to move—that is to say, when the chart is revolving this pencil must be actuated by the chart, and when the chart is not revolving the pencil must be actuated by the propeller. In other words you must have some connection, and he describes such a connection in here, or coupling or clutch, so that when the pencil is being pushed by the screw and the ship is not turning, it is being

turned by the screw, but when the chart wants to revolve, in order to eliminate this circular action, then this clutch permits the pencil to be operated by the chart itself, the slight drag of the paper. That is the essence of the machine. Now, as to its applicability—

Mr. Feick: If the Court please, I did not object before. I think my objection is noted to this character of testimony on the ground it is irrelevant and immaterial to the issues in this case. May my objection be noted?

The Court: It will be noted, yes.

By Mr. McCarter.

Q Proceed, Commander, please. A The object of this machine, which was invented during the war or about the time the European War started, is to facilitate the navigation of a ship. Now, there is a machine somewhat similar in principle to this that has been in use in the American Navy ever since about 1914 or 1915. That machine works on an entirely different principle. This machine as designed is a tremendous affair and occupies a great deal of space—I imagine at least four or five feet in diameter.

Q You mean the machine covered by those patents? A Covered by this patent, 1,310,200. Now, one of the claims of the patent is that this machine is particularly suitable to submarine boats. I myself see the unsuitability for submarine boats, because it is the last type of vessel that would ever have a use for a machine of this kind, for this reason. A submarine boat is a very congested little craft and needs all the

space possible, and a mechanism four feet in diameter to provide this kind of trace, even if it will provide it, it would not be worth the space it occupied. On a battleship you have more room, and if the machine would work it would perchance have some value, although the field for it is very, very limited. I can't conceive of the merchandise ship—and I am in the merchant service now—I can't conceive of the merchant ship, except the expensive use of a rich man who is playing with it as a toy—he might buy it—but commercially I can't say a merchant ship would use it. Now, there are several mechanical difficulties with this machine which, in my opinion, render it practically inoperative. In the first place, I mentioned this clutch which must be in this mechanism to permit the chart to rotate this pencil. Now, that clutch must be some mechanism so that when it is operated from this end they are in and out. The pressure is always one way or the other. When it is operated from this end, if it operates in one direction, the machine will permit it to operate it, and if the pressure is in another direction, it won't permit it to operate. Furthermore, it must differentiate, whether the machine is turning to the right or to the left, in which direction it will operate. Now, that is described in here and there is a drawing over it. I have gone over this very carefully, but will say emphatically that there is a fallacy in the mechanism because it won't work but one way. I never heard of a clutch that would work two ways in that sense that when it had power to pull, if it was desired to let it pull, it would permit it to pull, and it if was not desired for it to pull, at that particular instant, it won't pull. In other words

the machine has got to have some brain action to let it do a certain thing one time and not let it do another thing another time, and it won't function. That can be very easily demonstrated by this particular clutch drawing. I don't think it is necessary for me to go into all the particulars; simply it is a mechanical failure for that purpose, and the machine is inoperative if it does not function as it is claimed to operate. Then the other big disadvantage is that we assume a chart here. All marine charts are three or four feet in diameter—and that must be rotating. Well, you can easily see that that chart, with the ship rolling underneath—we will assume that the chart rolls and the ship is still, because this room won't roll—why, there is some considerable motion to a thing four feet in diameter, and there is no provision in here for taking care of the roll. He seems to have lost sight of the fact that the ship rolls, which is a very important point.

Q Now, as to the difference in the other. A Now, as to the modification. The modification is simply instead of using certain mechanical means to support this pencil from the ceiling, he hangs the pencil then to a steel rod, collapsible steel rod, telescopic. He hangs that from the ceiling. Of course, that occupies a lot of space. In the modification, which is patent No. 1,310,201, the pencil is held by a magnetic clutch on the paper and has the same clutch, mechanical clutch, to operate this release when the chart swings. Of course, the objection to one is identical with the objection to the other, in that that clutch is inoperative and the machine won't work. The same objection holds good in regard to the tremendous size which renders it inoperative. If the congested spaces are available in the ships,

why, then it can be used. And the third objection is that you cannot have a magnetic clutch anywhere near a magnetic compass. I don't think anybody connected with this was a seaman. He claims that this chart can be operated by a magnetic compass. Well, you can't have any magnetic clutches near a magnetic compass. Everybody knows that the moment you put a piece of steel with magnetism in it alongside a freely suspended needle such as compass, why, the needle will immediately abandon the north pole and point to the adjacent magnetism in this piece of metal.

Q Now, Commander, I show you Exhibit P. 33, which is the abandoned application of Hudson Maxim, serial number 871,883, for improvement in periscopes or position finders for submarine torpedo boats or other vessels and ask you if you have at the request of counsel for the plaintiff in this case, examined the alleged invention therein described? A I have.

Q Will you describe it to us? A There are two of these. I will have to take a moment to differentiate.

Q I will show you at this time, then, Exhibit P. 34, being abandoned application, serial number 3,489, of Hudson Maxim, for improvement in range-finding positions. Have you also examined the invention or alleged invention therein described? A Yes, sir. This is abandoned patent serial number 871,883 and it is a mechanism for combining a telescope with a photographic outfit, the idea being that the periscope, applying primarily to submarines—and, of course, I presume the inventor has in his mind the fact that submarines disclose their presence when they leave their periscope above the surface of

the water—and the basis of this is that by providing this photographic mechanism the periscope can be shoved out through the surface, a photograph taken, and then the periscope withdrawn, and that by means of the photographic outfit, the exposure of the periscope to the view of anybody that may be in the neighborhood will be very short.

Q What have you to say as to the utility of that invention for naval purposes? A I can't use language strong enough to condemn it, for this reason: I do not doubt that it can be made to work, but in the attack of a submarine boat there are three particualr conditions which the submarine commander must meet: First, when he makes what we call an approach or recognizance he is off at a considerable distance, four or five or six miles, and the danger of detection is not very great. He can use his periscope almost at will. Therefore, a photographic means is of no value to him at all, because he is not cramped for time at that stage of the game. Later when he makes the approach he must put himself in a favorable position somewhere ahead of the enemy's beam so that his torpedo will meet the mark. He must use his periscope to convey that to his mind. Now, if he trusts it to a photographic plate, then that plate must go through certain processes, chemical processes, and finally produce a photograph of some kind. Now, I am not an expert in photography, but I know something of it, and it takes some appreciable time to produce a picture.

By the Court.

Q To develop a print? A To develop a print, and produce a printed result of this ex-

posure. Well, a submarine commander is proceeding from one move to another move, and when he takes an observation he must use that observation immediately. It is obsolete two minutes later. The information is valueless. There is no object in having it two minutes after taking it. You must act instantly on what you see. It is the same way as a sportsman shooting a partridge. Now, no sportsman will take a photograph of a partridge and use the photograph to put the shotgun in such a position that the gun will hit that bird; and the same thing here. Now, finally when the submarine commander gets to the point of shooting his torpedo, the periscope is the sight of the torpedo. It is not only his eyes, but when he wants to shoot he aims the torpedo tube with the same periscope. It is the same instrument entirely. Therefore in the actual instant of discharge the photographic processes are useless. They would hamper him rather than help him.

Q Now, will you turn to the other abandoned application? A Now, this is a range finding feature.

By the Court.

Q What is the number of that? A I might say in connection with this that the patent office rejected every single claim.

By Mr. McCarter.

Q That is, in Exhibit P. 33? A That is in this Exhibit P. 33, 871, 883. The patent office rejected every single claim of novelty.

Q Now, turn to the other one, which is Exhibit P. 34, serial number 3,489, filed January

21, 1915? A Now, this is a machine in which the inventor proposes a range finding principle to the periscope. It is a well known principle of all triangulation, applied in ballistics of all kinds, that you can measure the distance of a target by getting its depression below the horizon and simply measuring the angle of displacement between the horizon and the object, and knowing the height of the observer's eye above the horizon, it is a matter of simple calculation to then compute from this same angle in here between the horizon and the object, the distance of the target. Just a similar simple explanation would be that if you went to the top of a building and looked down, that you could get a pretty good line on how far this object that you are looking at is away from the angle that you depressed your head and looked down. That is the principal of a great many range finders in use in all the armies and navies in the world. Now, this patent utilizes that principle in taking the periscope of a submarine, but he applies it to all naval vessels, and he elevates this periscope until he is able to see through the eye-piece down to a given target, and then he reflects this beam of light on a ground glass plate down inside the submarine, so that when the image falls on this ground glass plate, the distance from the image on the ground glass plate to the axis of columnation of the periscope, which is the diametric center of the periscope, the distance of this object and image of this plate away from the center of the periscope will be proportional to the angle between the line of sight to the horizon and the depressed line of sight to the object that he is aiming at. That is a mathematically correct principle. But the accuracy of the impression that

the operator of this mechanism gets depends on three things: First, the height of the periscope. If the height of the periscope varies at all, then of course the image will displace more or less away from this axis of columnation or the center of his picture. Now, by regulating the height of the periscope in the boat mechanically he can get a line on the distance from the opening or the object glass of the periscope to the plate that he is getting the image on, but the submarine is not fixed in space. Even when running on the surface, a submarine has such little buoyancy, actual, positive buoyancy, that she varies her level with the sea. I do not mean with the surface of the sea. I mean she actually varies her submersion. Of course, we then carry her up and down, too, but because she has so little reserve buoyancy she lurches under the surface and then comes up. I do not mean she disappears, but she does not follow a specific level such as an ordinary surface vessel does. A surface vessel has such tremendous buoyancy that she never sags down under the momentum of the waves like a submarine boat when she is running. A submarine boat in an attack has no buoyancy. She is then operating on a slightly negative buoyancy; that is to say, he is riding his ship with enough water so that he will sink if his rudder does not keep him up; that is to say, if he makes a mistake he won't emerge and sight himself to a ship. You can see that operating with negative buoyancy and holding himself in position with his rudders that his level is going to be continually changing. Well, if his level continually changes, then the indication of his periscope will continually change, too, and the information he gets will vary by that degree of accuracy that

he is able to regulate his height. As he will operate probably fifteen feet submerged and will not be able to keep his level within five feet of accuracy, his error will be thirty-three per cent. Now, another error that creeps into this mechanism is the fact that the ship rolls and pitches. If the ship is absolutely steady and can be held on a level, then this image will give a correct indication, but if the ships rolls, every time she rolls or pitches that throws the whole picture out, and the picture will move around on the ground glass plate just as vigorously as the ship rolls. Well, a submarine happens to be one of the worst rollers of all types of ships. It operates on an entirely different principle from a surface craft, and it is also pitching and rolling at a violent rate. The other objection is the fact that this image must be placed on a ground glass plate. Now, everybody that has ever used a telescope knows that the use of a telescope reduces the light that gets to your eye, and the only reason we can see through a telescope is the fact that all the light comes in the full diameter of the objective glass and we concentrate all that light down till it is no bigger than the retina of our eye, and that gives us plenty of light. Now, take the light that comes in a periscope and concentrate it all to the size of the retina of our eye, which is about one-sixteenth of an inch, why, you can see that the amount of illumination on the glass plate is going to be so small that it will be almost impossible to see an image. In the first place, the operator would have to be in impenetrable darkness himself. I consider that the fundamental difficulty with the machine is that a submarine boat is most valuable at dawn and dusk. In the middle of the day he is very liable to detection. In

the middle of the night he is just as blind as everybody else, but at dawn and dusk he can see as well as anybody, and he has to see a big thing whereas the other fellow has to see a little thing, so that he has a tremendous advantage over surface craft; but there is very little light. Now, I happen to know that the commander of a submarine always reduces the magnification of his periscope at dawn and dusk, because by reducing the magnification he gets better definition in the small amount of light he has available. He can make his periscope eight or ten times magnified in the middle of the day, but at dawn and dusk he will bring it down so that he can only magnify maybe one or one and a half. Now, that is the very time when this machine will dissipate all the little light that he has got. These are the prime objections.

Cross examination by Mr. Feick.

Q Commander, when did you first see these patents? A November, 1921, I think it was.

Q How did that come about? A Mr. Arkush brought them to my attention.

Q He had you to make an examination of them and give your opinion? A Yes.

Q You are not an inventor, are you? A I have invented some things, but I am not an inventor.

Q You have not invented anything of the character of these devices? A Oh, quite a number. I have not patents on them.

Q Have you ever seen these devices in actual operation? A No.

The Court: I suppose you mean the devices which he has invented?

Mr. Feick: No, sir.

The Court: Oh, these.

Q Your answer is no, you have not? A No.

Q Now, you have some very definite opinions, haven't you? You don't mean to say, though, that other people are not entitled to their opinions? A Why, of course not.

Q And it is a matter of opinion? A Well, my answer to that is that a man's opinion on the things that he is professionally qualified to express an opinion is much better than another man's opinion on those things that he is not qualified professionally to express an opinion on those things.

Q You mean that an expert's opinion is better than the opinion of a layman? A I should say yes.

Q How about the opinion of one expert as against the opinion of another expert? A I imagine then it comes down to the other people's opinion of the expert.

Q And it is a matter of opinion, isn't it? A Well, I am not an expert on that subject.

By the Court.

Q Do you know whether any of these devices have ever been manufactured and put in operation? A I don't know of my own knowledge, no, sir. I do know this, that none of them have ever been manufactured and used in the navy. I know that.

Re-direct examination by Mr. McCarter.

Q Commander, I do not know whether I phrased my question this way. What I meant to

ask you as to all your opinions was as of September, 1915. You so understand my question? A Yes.

HERBERT H. THOMPSON, sworn in behalf of plaintiff.

Direct examination by Mr. McCarter.

Q What is your profession, Mr. Thompson? A I am a patent attorney.

Q How long have you been such? A I have been in the patent business for nineteen years. The first four years I was in the Patent Office as an assistant examiner, and the last fifteen years a patent attorney.

Q Have you devoted your attention to any particular line of invention or patents especially? A During the last fifteen years I have been in charge of the patent department of the Sperry Gyroscope Company, who manufacture navigational instruments of all kinds; that is, instruments for assisting in the navigation of a ship, such as gyroscopic compasses, course recorders of various kinds.

Q I show you Exhibits P. 61 and P. 62, being two patents issued to Hudson Maxim, Nos. 1,310,200 and 1,310,201, respectively, for improvements in position indicators or recorders, and ask you if you have, at the request of counsel for the plaintiff in this case, examined the inventions or alleged inventions described in those two patents? A I have.

Q Now, we have just had these inventions described in great detail, so I am not going to ask

you to redescribe them. I merely want to ask you to state the conditions as to the prior art of the two inventions described in those patents.

Mr. Feick: If the Court please, may my objection also be noted to this?

The Court: Oh, yes, certainly.

A In my opinion the two patents are valueless, both for the reasons stated by Commander Cresap, and because they are very limited by the prior art. In fact, one of the patents in particular is invalid, in my opinion, and the other is limited to a detail; namely, the clutch mechanism described by the Commander, which is wholly inoperative.

Q Which of the two is invalid, in your opinion? A The second patent, No. 1,310,201.

Q Does the Sperry Gyroscope Company, with which you have been connected, sell commercially position recorders designed to accomplish what those two patents accomplish? A It sells such devices as they have a market for. But this type of instrument known as the dead reckoning instrument there is very little market for. In fact we have only sold a very few of this particular type of instrument shown by Maxim, in which attempt is made to rotate the chart instead of the design that is recording the course. There is no market for it at all because it is such an awkward way of doing it. Instead of turning the pencil when it turns and pointing it in a new direction, Maxim tries to turn the chart, or turn the earth. It makes a most awkward operation.

Cross examination waived.

COLONEL ROGERS BERNIE, sworn on behalf of plaintiff.

Direct examination by Mr. McCarter.

Q Colonel Bernie, what is your profession? A Retired Army officer.

Q With the rank of colonel? A With the rank of colonel.

Q Are you a graduate of West Point? A Yes.

Q What year did you graduate? A In 1872.

Q You remained in the army until when, in the active list? A Well, I remained in the active list to the age retirement of 1915, sixty-four years.

Q What branch of the service were you especially active in? A Principally in the Ordance Department. My first service was with the infantry, Camp Douglas, Utah. Then for five years with the Geographical Service in the Western country, and then in 1878 in the Ordance Department. From 1878 to 1915 I was in active service in the Ordnance Department.

Q Just what does the Ordnance Department have to do with, in order that we who were not soldiers may fully understand? A The Ordnance Department furnishes all of the munitions for the army, and it supervises the manufacture of all kinds of munitions, small arms, cartridges, projectors; supervises the manufacture of small arms and of cannon and of gun carriages, and generally what is called the armament of the troops.

Q During your career as an ordnance officer, did you have anything special to do with the operation and construction of cannons, small arms,

at proving grounds, for example? A I did. In the first place I was on duty at the West Point foundry where the first steel guns—that is, in 1888. We had been using cast iron guns formerly. Then they introduced the manufacture of steel guns, and I had charge of the experiments that led up to the methods of putting the steel guns together at West Point foundry. Then afterwards at the Sandy Hook proving ground, I was stationed there for approximately fifteen years, where we had to test all of the munitions and the various classes of armament in small arms and guns of every description, and machine guns. I would like to say that I was on duty in the early years at the Springfield Armory in charge of the Water shops, one of the establishments that manufacture infantry rifles.

Q Now, I show you Exhibit P. 14 in this case, which is United States patent No. 1,228,827, issued to Maxim Munitions Corporation for improvement in air-cooled shoulder rifle, and ask you if you have, at the request of counsel for the plaintiff in this case, examined the invention or alleged invention therein described?

The Court: Is this the Brown gun?

Mr. McCarter: That is the Brown gun, yes.

A I have.

Q Will you briefly describe it to the jury so that they can understand what it is supposed to be, and how it is supposed to act? A It is a recoil operated firearm. That means that the recoil of the barrel is utilized to eject the cartridge and to place the breach block in position to fire again. Then there is a spring in the butt

that acts in the other direction, and when you pull a trigger and release the breach block a spring in the butt forces that forward and fires the cartridge.

By the Court.

Q On the automatic principle, is it. A It is semi-automatic. It is not automatic because you have to pull the trigger each time to fire the gun. So there is a spring around the barrel and a spring in the clutch. And as I said, they operate one to act in either direction. Now, when the breach block goes forward by pulling the trigger—the breach block is composed of two parts, the sleeve or carrier and the bolt, and the bolt slides in the front part of the sleeve carrier and has a partly rectilinear and partly rotational operation. When the bolt goes forward it is sticking out of the carrier and it takes out the cartridge from the top of the mechanism and carries it towards the breach of the barrel. When it just approaches the breach the stud causes that bolt to rotate and it turns and locks. I am quite familiar with the operation in magazines and small arms. It turns and locks the bolt securely in the barrel. There are lugs and blanks for this bolt to turn and lock.

Q Is this done by the recoil or by pulling the trigger? A That is done by pulling the trigger. So that is the operation in closing. Now, when the gun is fired, the force of the cartridge acting on the face of the breach block carries it back and carries the barrel with it. The force of the recoil—the barrel is dragged back by the force of the recoil on the face of the breach of the bolt, and when the breach block—the reverse motion of this rotation and rectilinear action of the bolt

serves to release it from the barrel as it is going back. Then there is a catch in the rear piece which catches the bolt, holds the bolt out, projecting from the face of the sleeve, but there is what is called a rocking sear—and I may say that this rocking sear and the action of this bolt are the only, practically the only original features in the rifle. When the bolt passes back it passes over the sear, and the sear comes up and catches it and holds it in the rear position.

By Mr. McCarter.

Q What is the sear? A The sear is a strut, which acts as a strut to hold the bolt in a certain position.

Q Have you ever seen a model of this rifle? A Yes, I have.

Q I show you Exhibit P. 15, which has been lying on our table here for several days, and ask you if that is a model of the rifle? A I understand this to be the model. I have had it before, and the last time I saw it in the office of Mr. Arkush it was in working condition. I am very sorry to see now that it is not in working condition. Somebody who undertook to clean it, some gunmaker got the mechanism stuck so it won't work. You can't pull the trigger and make it go forward, but this illustrates the open position of the block. As I said, the block is caught by the sear, the trigger sear in the rear position, and if you could see in here, you could see that that bolt is sticking a little ways out of the sleeve.

By the Court.

Q That open space where your finger now is is where the magazine fits in? A The magazine

fits in here, and the upper cartridge is brought in line with the bolt when it goes forward. This gun has a good many features which are an infringment upon the Browning gun patented in 1900. The Browning gun, its first patent is dated in 1900.

Mr. Feick: If the Court please, my objection is noted to this entire line of testimony?

The Court: It is.

By Mr. McCarter.

Q What have you to say, Colonel, as to the practical utility of that gun for army purposes? A I should say that it would not have been adopted in the army if it had been submitted to the army for adpotion.

By the Court.

Q You see that does not quite answer the question? A I don't consider that a useful invention for military purposes.

By Mr. McCarter.

Q Is that your answer as of September, 1915? A Yes, sir.

Q Does it comply with the army requirements for small arms? A No, it does not.

Q In what respect? A In the first place, the requirements are, as everyone knows, that a rifle must be steady in firing and nothing about it to derange the aim. Now, if I could have shown you, you would see that there is quite a heavy mass, the sleeve carrier and the bolt in it going forward violently, with this thing shoving the

cartridge in, and that makes a great bang against the front, and if you were holding this gun and firing it, it would shake you like that. In the next place, all the army regulations in vogue at that time in 1915 required a gun that could be used at will, either as a single loader, or as a magazine rifle. It required that the magazine should have a cut-off so that you could shut off any number of cartridges. At any time you could shut off cartridges in a magazine, using it as a single loader, using your magazine fire for emergency. Now, this is not adapted to a single loader at all. In the first place, if you have a cartridge in the chamber there and fire that—Oh, you would have to carry the gun loaded as a single loader to be used as a single loader under emergency. Now, you can't have that gun loaded unless you have this breach down on it. You see in order to get the cartridge into the rifle at all you have to let this go forward and load it. Now, if you were carrying this gun loaded with this firing pin—I have not mentioned the firing pin, but of course there is a firing pin in the breach block—this firing pin pressing on the cartridge, on the chamber, would be a very dangerous way in which to carry it. This gun, if you were carrying it that way with the cartridge in the chamber, you have to go through this half motion and pull that back before you can fire it. And besides that, this magazine is—the gun is very much exposed to collection of dirt, which is another fundamental objection to anything connected with a military rifle.

Q Thank you very much on that, Colonel. I think we might pass on now to Exhibit P. 60, which I show you, being a patent issued to Hudson Maxim, No. 1,031,279, for an improvement in

a combined multi-barrel gun and range finder, and ask you if you examined the invention or purported invention therein described? A I have.

Q What have you to say with reference to the utility of that invention for army purposes, as of September, 1915? A I consider it nothing more than a toy, simply a little legerdemain with a drawing to illustrate something that might be done; absolutely without value at all.

Q Why? A In the first place, his claim that he has a range finder attached to the gun is absurd. He has no range finder. He simply places his eye at the rear sight and looks at this little peep hole which was described to you yesterday and gets this view tangent to the target, wherever it may be. Now, whatever may be said in patenting, his patent says—I have this so that you will see. There is no reasoning there and there is no logical deduction to say that it is a range finder.

By the Court.

Q What is the weight of this gun loaded? A It depends upon what barrel you use. I have some computations here on the load for different weights of the barrel that I can give you.

Q That may not be important. A The computations show that if you use a three-inch gun, that it has six barrels, that the weight would be something like 25,000 pounds, and that the diameter—

Q Twelve and a half tons? A Yes, and the outside diameter of the breach would be fifty inches. You see, six three-inch barrels—they are arranged circularly, but if you take and arrange them in the way he has them, six three-inch bar-

rels would necessitate an outside diameter of fifty inches, which is as large as that of a fourteen-inch gun, which would be perfectly absurd.

Q How large would it be for 30 calibre? A It would be quite within bounds for the 30 calibre, ten or twelve inches in diameter, I should think, sir. I tried it with the estimates of the three-inch fifteen-pounder gun, and for a six-pounder, and with a 24 calibre gun, because Mr. Maxim says you must have barrels with tremendous shooting power, and the reason he has to say that is because his ranging, his sighting, is absolutely dependent upon the fact that he imagines the projector, the gun barrel to be in a straight line in prolongation of the gun barrel. He imagines that. Now, if you get munitions of the velocity high enough and straight for a long distance to shoot absolutely level in the prolongation of a barrel, then you would have something that he wants to claim, but every projector of a bullet is a curve.

Q What is the smallest calibre that is effective as an anti-aircraft gun? A The 30 calibre is the one that is used. They use the infantry rifle and the 30 calibre machine guns. Of course some of the infantry rifles have a smaller bore. We are developing now a semi-automatic gun.

Q I mean at that time, 1915? A The 30 calibre machine gun and a 30 calibre rifle.

Cross examination waived.

COLMAN R. SAMPLE, sworn in behalf of plaintiff.

Direct examination by Mr. McCarter.

Q Mr. Sample, what is your profession? A I am a civil engineer.

Q And with what company are you associated? A Associated with the firm of Ford, Bacon & Davis, Inc.

Q Have you had any experience in making appraisals, including appraisals of factory buildings? A I have been engaged principally in that work for the past ten years.

Q I show you Exhibit P. 20, being the deed from Fuller Manufacturing Company to Maxim Munitions Corporation, and ask you whether you ever have examined the buildings described in that deed and made an appraisal of them? A I have.

Q I also show you Exhibit P. 21, being a map and picture of a building, and ask you if you recognize that as being a map and picture of the building which you examined. A This is the map of the property that I examined.

Q Now, I ask you please to turn to the deed and direct your attention to the part of the deed which describes the machinery and equipment, particularly that part beginning with the words, "650 feet of 2⅝ inch fire hose," which I am indicating now with a pencil, and going down to and ending with the words, "suspended near roof in middle stairway," which I also indicate with a pencil, and ask you to look at that equipment there described and tell me whether or not that is all standard equipment? A That is all standard equipment for a manufacturing plant.

Q Have you investigated the labor costs and unit costs of building materials in New Haven of and about September of 1915? A I have.

Q Now, on the basis of the inspection which you have made, as you testified to, and the investigation which you have made, and on the assumption that the main building and the power house described in these two exhibits were constructed in 1902, have you determined what, in your opinion, was the reproductive cost of the buildings and the equipment above specified and the railroad siding less depreciation, as of September, 1915? A I have.

Mr. Feick: If the Court please, I object to the testimony on the same ground as above. It is entirely irrelevant and immaterial on the question of over-valuation. Furthermore, it does not appear that he actually examined this building in 1915, or knew anything about—

The Court: In other words, that he is not qualified to answer the question.

Mr. Feick: Furthermore, on the ground that the question of reproduction is not at all an element in this case. It leaves out entirely other elements which are important in determining value.

Objection sustained.

Plaintiff's counsel prays an exception to this ruling of the Court.

Exception noted as ground of appeal.

Mr. McCarter: Now, if the Court please, I had my associate, Mr. Congleton, make an examination of the quotations of the New York Curb Exchange of the selling prices, the high and low, of the Maxim Munitions

Corporation stock in the period from September 1, 1916, to December 31, 1916, as recorded in the New York Times, and he has embodied his examination in this document I hold here, which has been checked up by Mr. Feick to insure its accuracy, and certain corrections which Mr. Feick says should be made I have now made in it. Mr. Feick has agreed that this document may be put in with the same force and effect as if Mr. Congleton testified to and had the great collection of New York Times here, and with the same force and effect as if a broker qualified to testify were to testify that the records of the Curb Market as published in the New York Times are relied upon and used by the stock brokers. He does not admit its relevancy; but under that understanding I offer this document in evidence.

Objected to as irrelevant and immaterial.

(Counsel argue.)

Objection overruled.

Defendants' counsel prays an exception to this ruling of the Court.

Exception noted as ground of appeal.

(The same is received in evidence and marked Exhibit P. 63.)

PLAINTIFF RESTS.

Mr. Feick: We have a motion, if the Court please, for a non-suit on these grounds:

We say that before an action to enforce the assessment can be brought there must be an assessment as a condition precedent.

We say furthermore that the plaintiff has failed to prove a valid assessment against

the defendant on these grounds: That the proceedings for the assessment must be brought in the courts of the State under the laws of which the corporation was organized, and neither the New York District Court or this court has any jurisdiction to make the assessment.

We say furthermore that the District Court of New York had no jurisdiction under the Bankruptcy Act in this matter, as the corporation, it appears from the evidence, was domiciled in Delaware, the place of its incorporation, and its principal place of business where its manufacturing assets were was in the State of Connecticut.

We say furthermore that the District Court of New York had no jurisdiction to make the assessment, on the ground that it involved the setting aside of the contract between the corporation and the promoters and subsequent purchasers, that the stock was full paid and non-assessable, and that this cannot be done in the bankruptcy proceeding but must be by a plenary suit. It does not come within Section 23-B of the Bankruptcy Act.

We say furthermore that the defendant was not a party to the New York proceedings, and that he was not properly brought in by service of process.

We say furthermore that to give the effect to the assessment order as being binding upon the defendant would be to hold that the defendant is bound by it without due process of law and without an opportunity to be heard, and that therefore it constitutes a violation of his rights under the Fifth and

Fourteenth Amendments to the United States Constitution, Paragraph 1 of Article I of the New Jersey Constitution, the Seventh Amendment of the United States Constitution, and Article I, Paragraph 7 of the New Jersey Constitution, and denies to the defendant his right to trial by jury.

We say furthermore that it does not appear that the Trustee in Bankruptcy in this case, who is the plaintiff, had a right to bring this suit as Trustee.

The Court: Now, I think all those points have been passed upon as the case has proceeded, haven't they? on objections to testimony. I mean, is there any new point raised by your motion for a non-suit up to this point?

Mr. Feick: No. I want to renew the point that the Statute of 1897 bars this sort of suit at law.

The Court: I did not mean to suggest that you had finished your reasons.

Mr. Feick: They are chiefly what we have already at one time or another argued.

We say furthermore that the Court has no jurisdiction, because before the suit can be brought the contract in connection with the issue of the stock must be set aside, and we say that Section 14 of the Delaware statute expressly provides that the stock shall be full paid and non-assessable.

(Counsel argue.)

Mr. Feick: We say furthermore that the proofs show the defendant's testator was not a subscriber to the stock of the company, but

a purchaser. I think that is undoubtedly admitted.

The Court: Oh, that is an admitted fact.

Mr. Feick: He bought this stock from Mr. Palmer.

The Court: No doubt about that.

Mr. Feick: The proofs further show that many years prior to the assessment and long before the adjudication of insolvency against the company, the testator sold these shares, and they were transferred on the books of the company out of his name. We say that that relieves him of any obligation for an assessment.

The Court: You think it does if at the time he purchased this stock he knew that the stock was not full paid stock?

Mr. Feick: Yes, if the corporation accepted the transfer on its books.

The Court: Oh, but this is not the corporation that is a party to this suit. It is a creditor of the corporation.

Mr. Feick: But the Trustee stands in the position of the corporation. If the creditor could not enforce it, the Trustee in Bankruptcy cannot enforce it.

The Court: The corporation itself might not be able to enforce that situation, but creditors may enforce that where the corporation itself could not, may they not?

Mr. Feick: I do not believe that a Trustee in Bankrdptcy can sue in a case of this kind for fraud—

The Court: What is his position? Does he occupy a double position? He is the

Trustee in Bankruptcy and he is the trustee for the estate, but he is also the trustee for the creditors.

Mr. Feick: Yes, but as trustee for the creditors he can do only what the creditors can do.

The Court: Oh, certainly, there is no question about that.

Mr. Feick: And I say that the creditors cannot enforce this obligation if the corporation has committed itself by accepting the transfer on the books.

The Court: I get your point.

Mr. Feick: Unless the purchaser is a subscriber. There is a difference between the subscriber and purchaser of stock.

The Court: You do not mind these interruptions, because they are prompted by my misunderstanding of your point.

Mr. Feick: We say furthermore that the plaintiff in this suit has no power to sue because he is limited territorially to the State of New York.

And then we state furthermore that under the proofs the plaintiff has failed to show his authority to sue, that he has not offered the proper record of the New York proceedings.

(Counsel argue.)

Mr. Feick: We say furthermore that the sections of the laws of Delaware provide the right to recover an assessment in such a case as this, and the remedy, and we say that that remedy is exclusive and must be pursued in the court of domicile, of Delaware. Furthermore, that those statutes require the securing of a judgment and the issuing of an exe-

cution as a condition precedent to a suit to collect, and that does not appear in this case.

The Court: Do you think that two judgments are required, first a judgment in the State of the domicile of the corporation, and then another suit to enforce that judgment in the State in which service can be obtained? Is that what you mean?

Mr. Feick: Either there or in a court of proper jurisdiction. Section 51, I think your Honor is familiar with it, "No suit shall be brought"—

The Court: Yes, it is copied in your answer.

Mr. Feick: Yes, it is set out.

Now, we say furthermore that it appears that the defendant was not a stockholder either at the time of the decree of insolvency, the institution of the proceedings in bankruptcy or the proceedings for the assessment in the bankruptcy courts, and he was therefore not properly a party to these proceedings, nor was he properly brought in on any theory by the mere mailing of notice.

We say furthermore that it does not appear that the defendant had notice, either actual or constructive, of any over-valuation. He was a bona fide purchaser, not a subscriber, and has therefore no liability.

The Court: I think all of these questions have been passed upon during the trial of the case adversely to the claim of the defendant, and therefore the Court rules now that the case presents one of fact for the jury and that the legal propositions which are now urged as grounds for non-suit, having been

passed upon adversely to the defendant during the trial of the case, the motion for a non-suit must be denied and an exception to that ruling as ground of appeal may be noted.

Defendants' counsel prays an exception to this ruling of the Court.

Exception noted as ground of appeal.

Mr. Feick: Now, Mr. McCarter has offered the Delaware statute. I do not know whether he has put all of it in or not.

Mr. Arkush: Chapter 65 is all in.

Mr. Feick: As I understand it, the entire Delaware Corporation Act is in evidence.

The Court: I so understand it, don't you?

Mr. Arkush: Yes, sir; it is.

The Court: It is admitted that it is.

DEFENDANTS REST.

(Counsel argue.)

Mr. Feick: If the Court please, may I have it noted that I also move for a direction of a verdict on the same grounds?

The Court: Oh, yes. The motion is made for the direction of a verdict upon the same grounds as for a non-suit, and the motion will be denied and an exception to that ruling may be noted.

Defendants' counsel prays an exception to this ruling of the Court.

Exception noted as ground of appeal.

Mr. Feick sums up the case in behalf of defendants.

Mr. McCarter sums up the case in behalf of plaintiff.

(At one o'clock P. M. the Court takes a recess until two o'clock P. M.)

CHARGE TO JURY.

The Court charges the jury as follows:

DUNGAN, *J.*:

Gentlemen: This has been a very interesting trial for two reasons, because it has been so pleasantly tried between the attorneys and witnesses and because the circumstances of the case are so unusual. We all recall the early days of the World War and how in all parts of this country corporations were formed for the purpose of manufacture and sale of munitions of war and ordnance and instruments of war to be sold by the various corporations to the warring nations, the United States in those early days not being a participant in that war.

The corporation involved in this case appears to be one of the corporations formed for that purpose. It was known at the outset as the Maxim Munitions Corporation and later on the Maxim Corporation. It was promoted by five or six men of whom Mr. Taylor, who was a witness in this case, was one. He says that the idea was put into effect beginning in July, 1915, resulting in the formation of the Maxim Munitions Corporation I think in August of that year, 1915. The capital stock was fixed at one million shares

of a par value of $10, of which thirty-five shares were taken by those who constituted the first board of directors. I think there were seven of them, which probably meant five shares apiece, although Mr. Taylor I think names eight members of the board of directors. The remaining nine hundred and ninety-nine thousand nine hundred and sixty-five shares were awarded to a man named Sweeney, according to the resolution which appears upon the books of this corporation, which are here in evidence, for certain property described in that resolution and in the documents which have been produced and which are referred to in that resolution. A transfer agent was appointed, which was a New York financial corporation, and this stock was put in escrow and was issued either to or upon the order of Mr. Sweeney.

The company appears not to have been successful, in its financial operations at least. Several stock syndicates appear to have been formed for the purpose of raising money to finance the corporation. One of these syndicates is what has been called the Five-hundred-ten-thousand-share syndicate, which is evidenced by an agreement dated February 10, 1916, which was a little over six months after the formation of this corporation in 1915.

Among the members of that syndicate was a man named Palmer, to whom was awarded 12,750 shares of the stock of this company. It appears that typewritten certificates were issued to the members of that syndicate, but that certificates of stock were not actually issued because of, I assume, the escrow agreement. Thereafter it appears that Mr. Theodore D. Palmer transferred the 12,750 shares in two

equal parts, one-half to Christian Fleissner and the other one-half to Otto H. Oppenheimer, each of whom thereupon became the beneficial holder or owner of 6,375 shares. From the evidence in this case it appears that the 6,375 shares were transferred to Mr. Fleissner in December, 1916, and that he continued to hold that stock until sometime in 1917.

Thereafter, after 1917 and after the disposal of this stock by Mr. Fleissner, proceedings were taken in the United States District Court of the Southern District of New York, in bankruptcy, against this company, the Maxim Corporation. This was a Delaware corporation, and it appears that by the laws of the State of Delaware in force at that time it was provided that when the whole capital stock of a corporation shall not have been paid in and the assets shall be insufficient to satisfy the claims of its creditors, each stockholder shall be bound to pay on each share held by him the sum necessary to complete the amount of the par value of such share as fixed by the charter of the company or its certificate of incorporation, or such proportion of that stock as shall be required to satisfy the debts of the company.

So notwithstanding the fact that when this stock was issued to Mr. Sweeney the directors of the corporation declared that it was issued full-paid for the property purchased, if as a matter of fact it was not fully paid, but there was such a gross discrepancy between the par value and the property which was received for that stock as to amount to a fraud, that even though the company itself, had it been successful, could never have gone to its stockholders and collected the difference, yet if the company

failed and was not a success and there were creditors to pay whom the assets of the company were not sufficient, then those creditors or any person or corporation which represented those creditors might collect any deficiency in the payment of that stock up to its full par value.

So after the company had been adjudicated a bankrupt and a receiver had been appointed, an investigation was made by the trustee, who filed a petition in the United States District Court for the Southern District of New York alleging that this stock had not been fully paid and that there was such a gross difference between the actual value of what had been given for the 999,965 shares and that amount of money, as to amount to a fraud, and he asked the action of the referee of that court for an order permitting an assessment of the stock among those who had been holders of the stock with knowledge of that fact. Thereafter such proceedings were had that the stock was assessed, and we have attached to the complaint in this case the order of the referee in bankruptcy fixing the amount which each stockholder must pay as an assessment upon his stock.

That assessment could only be made after taking into consideration certain things which the law designates and which perhaps it is unnecessary for the Court now to enumerate. However, some of them are the amounts actually paid upon the stock, the amount of the debts of the corporation at that time, the assets of the corporation at that time, deducting from the debts of the corporation the amount of the assets of the corporation which might be applied to those debts, which would leave the

shortage which should by that court be equitably apportioned among the stockholders who had not paid full value for their stock, or upon such original stock as they hold for which full value had not been paid, and then taking into consideration also the ability of certain of the stockholders to pay.

This order, after taking all those things into consideration, or it states that it did and so we must assume that it did, assesses against certain persons an arbitrary sum; for instance, against Hudson Maxim a hundred thousand dollars is assessed, against William A. Scully and Edward H. Beckert twenty-five thousand dollars each is assessed, although a pro rata assessment of their stock would amount to more than that; but the Court holds that the financial condition of each of these persons appears to be such that the assessment against them of sums in excess of the following amounts would be futile and endanger the collection of assessments from other respondents, among others of whom is Mr. Taylor, who is a witness here, against whom no assessment was made because no collection could be made from them. Then as to others there seem to be a pro rata assessment. I say, "a pro rata assessment,"—an assessment after taking into consideration all of these principles I have stated, of certain amounts named in this order of the referee in the Federal Court. Among others is an assessment against Christian Fleissner of $19,572.97, and it might be well for some one or more gentlemen of the jury to take down that amount because that is the basis of the plaintiff's claim in this case, $19,572.97.

This order was filed on August 24, 1926, and notice of this assessment was sent as required by law to Mr. Fleissner, directed to 125 New Jersey Railroad avenue, Newark, New Jersey.

On what date?

Mr. Arkush: Two days afterward, September, 1926, a few days after the—

The Court: The only importance of that is as a date from which to figure interest.

Mr. Arkush: Before the date on which interest is claimed in the complaint, which is September 6th.

The Court: (Continuing) before September 6, 1926.

After the proceedings were taken and this notice sent to Mr. Fleissner, and after this suit was brought, he died, and the suit was revived against his executors and is now proceeding against his executors. If he was liable for the payment of this assessment, then his executors now representing his estate are liable for this assessment.

It has been decided by a number of decisions in the Federal and State courts that the court which has the authority to levy such an assessment (and I charge you that the bankruptcy court has the power to levy the assessment in this case) may take into consideration and should take into consideration in their decision of the matter all matters which are general to all the stockholders, and that after the assessment has been levied the only defenses which can be interposed are those defenses which are peculiar to the individual himself who is being sued for the assessment; and that is substan-

tially what is stated in the order of the referee in bankruptcy.

The last paragraph and the ninth paragraph in this order holds this, which is along the lines of those decisions which I have cited, "That this order is and shall be deemed without prejudice to the right of any person named in said Schedule A"—that is, the persons against whom the assessment has been made—"or his representatives who may hereafter be sued in any court of competent jurisdiction for the collection of the respective sum herein above assessed against him to make any defense to said suit personal to himself."

Two principal defenses are suggested in this suit only which are personal. I say "suggested". I mean suggested by what has taken place in this trial or suggested by the evidence, which are purely personal to Mr. Fleissner, or since his death to his representatives, who stand in his shoes in this case; and one is that he paid full value for the stock and the other is that he had no notice of the assessment against him or of the proceedings which resulted in the assessment against him.

Taking up the first one only because Mr. Baker, Juror No. 10, has raised that question by asking the amount which Mr. Fleissner paid for his stock and not because it is now insisted upon by the defendants, I will say that I recall no testimony in this case as to the amount which Mr. Fleissner paid for the stock. The proofs show that Mr. Palmer received for the sum of $5,000, 12,750 shares, which would be a trifle less than 40 cents a share. Under date of February 19, 1917, which was when Messrs. Davis and Durkin came into the matter, there was

signed a document which is in these words: "In consideration of the acceptance by Messrs. Davis and Durkin"—their full names are given —"of a certain proposition to be made to them to become directors, officers, and actively interested in the Maxim Munitions Corporation, we, the undersigned, hereby authorize and empower you to hold for their account and benefit, to be issued to them when the stock is released, one-half of the stock of the said Maxim Munitions Corporation, which you hold in our account in accordance with a certain syndicate agreement dated February 10, 1916, signed by the respective members of the said syndicate" —By the way, I neglected to state that this is directed to J. Campbell Thompson, trustee, who was the syndicate manager or the person who was to hold this stock in escrow. Then it continues: "It being understood that said stock so held for the account and benefit of Messrs. Davis and Durkin is to be held subject to the same conditions and released when and under the same conditions as our stock to be held and released to us. It is understood and agreed that this agreement is effective only when all the original subscribers to the syndicate agreement dated February 10, 1916, have signed." This is signed by a number of persons, among whom is Christian Fleissner.

Now, to the left of his name appear the figures $2,500. Whether that means that he paid to Mr. Palmer $2,500, or, since he had half of the stock which was issued to Mr. Palmer, that that was half the amount which Mr. Palmer had paid for it, does not appear by any evidence in this case at all. So I say to you that there is no proof in this case as to what Mr. Fleissner

paid for this stock. Of course, if the undisputed proof was that he paid full value for this stock, then I would be obliged to charge you that that was a defense which would prevent the plaintiff from recovering, but that is not the proof, and indeed in his admissions in this case, the attorney for the defendant has admitted that that question is not involved and that the only question involved in this case is the other one which I have mentioned; that is, whether or not the greater weight of the evidence shows that notice of the fact that this was not fully paid stock was had by Mr. Fleissner at the time he purchased it.

Much of the rest I shall have to say is embodied in the requests to charge in this case. For my comment upon when that knowledge must be had by Mr. Fleissner, I will read you the defendants' fifth request.

"5. In determining whether or not the defendant had knowledge that the stock which he purchased was issued for property at a gross overvaluation and was not full paid and non-assessable, you must confine your inquiry as to whether he had knowledge of such overvaluation at the time that he purchased the stock"—"at the time he purchased the stock," those are the important words—"or at least that he had notice of such facts at that time as would put a reasonable man on inquiry, and that if such inquiry had been made by him, he would have discovered the fact that the stock had been issued in purchase of property at a gross overvaluation." If you find that he did not have such knowledge, or to put it more accurately than the request states, unless the greater weight of the evidence shows that he did not

have that knowledge, or notice of facts as would put a reasonable man on inquiry, at the time that he purchased the stock, the fact that he later acquired such knowledge or such notice of facts as would put a reasonable man on inquiry, will not render the defendant liable and your verdict must be for the defendant.

In other words, it must have been the knowledge that he had at the time that he acquired the stock or the knowledge which he might then have obtained, and not the knowledge which he afterwards acquired, which will make him liable in this case.

Now, he had more stock than the stock which he acquired from Mr. Palmer, but the plaintiff's claim is admittedly only in connection with the purchase of the stock of the defendant from Theodore Palmer, and there is no claim for any assessment against the defendant in connection with the purchase of any other stock of the company. It is only with reference to those 6,375 shares which came to him from Palmer.

I told you that I would confine what I had to say principally to the requests to charge. So I will now take up the plaintiff's requests to charge and charge those which have not been withdrawn.

The first request. "Owners of shares of the capital stock of a Delaware corporation, the par value of which has not been fully paid, in cash or property, to the corporation, who did not purchase such shares for value without notice of the fact that the shares were not fully paid, may be held liable ratably for the amount necessary to pay the debts of the corporation, with interest, and the expenses of administration."

By "ratably" I assume the plaintiff's attorney means to take into consideration the equitable principles upon which this stock must be assessed, and that being so, with that modification that is a proper request, and I shall charge it.

Now, it is insisted in this case on behalf of the defendants generally that, because it appears without dispute in this case that at the time the assessment was made upon this stock Christian Fleissner was not the holder of that stock, he had sold it before that time; therefore I charge you the plaintiff's twelfth request, which is, "The fact that Christian Fleissner was not the holder of record of the 6,375 shares mentioned in the complaint does not defeat the action in whole or in part, since the liability may be incurred by beneficial owners," that is, those who may not be owners of the stock at that time, but who have the beneficial interest in it, "as well as record holders of unpaid stock in a corporation."

That is a correct statement of the law applicable to this case on that subject.

I think I have already charged the eighteenth, have I not, in what I have said?

Mr. Arkush: I think you have.

Mr. McCarter: Yes, in effect.

The Court: Now, then, I shall charge the plaintiff's requests as the proper law in this case, numbers 23, 24, 25, 26, 27 and 28 and these are:

"If Christian Fleissner acquired beneficial ownership of 6,375 shares of the capital stock of Maxim Corporation under circumstances which would have induced a reasonable man to inquire

whether such shares had been fully paid, he is chargeable with knowledge of all facts which a reasonable inquiry would have disclosed.

"Among the circumstances to be considered by you in finding whether Christian Fleissner was under a duty to make further inquiry when he acquired his interest in the syndicate of February 10, 1916, are the following:

"The difference between the price per share paid by the syndicate and the par value of the stock"—the par value of the stock being $10, the price paid by the syndicate being 40 cents a share—"the difference between the total par value of the issued stock and the apparent value of the assets of the corporation; whether the stock was purchased by the syndicate in the open market or by direct negotiation with the previous owners; whether a sufficient time had elapsed since the formation of the company to explain the difference between the par value of the stock and the price paid by the syndicate," the formation of the company being in August, 1915, and this syndicate being formed by the agreement of February 10, 1916; "whether the stock acquired by the syndicate had become a seasoned article of daily merchandise on the stock market; whether the price paid by the syndicate was approximately the market price for the stock."

"If you find that Christian Fleissner became a member of the syndicate of February 10, 1916, then he was chargeable with notice of all the facts stated in the recitals of the syndicate agreement of that date, although he did not sign the original syndicate agreement."

But you probably have already observed that this syndicate agreement of February 19th that

I have read to you and which is signed by Fleissner, speaks of the syndicate agreement, and the last paragraph is, "It is understood and agreed that this agreement is effective only when all the original subscribers to the syndicate agreement of February 10, 1916, have signed," and this as I say, has been signed by Christian Fleissner. So if you find that Christian Fleissner became a member of the syndicate of February 10, 1916, then he was chargeable with notice of all the facts stated in the recitals of the syndicate agreement of that date, although he did not sign the original syndicate agreement.

"If Christian Fleissner acquired the 6,375 shares mentioned in the complaint under circumstances which would have put a reasonable man on inquiry as to whether the stock were fully paid or not, then he was not entitled to rely upon the statement appearing in the stock certificates to the effect that the stock was fully paid and non-assessable," although of course you have a right to take into consideration the fact that it was so stated in that stock certificate which he obtained for that stock.

"If Christian Fleissner was under a duty to make reasonable inquiry as to whether the stock acquired by him was fully paid or not, he was chargeable with knowledge of all the facts which would have been disclosed by examination of the corporate records and such further reasonable investigation as an examination of the corporate records would have induced.

"A duty to make inquiry as to whether the shares of Maxim Corporation were fully paid would not have been discharged by examining the proceedings of the directors as shown in the minutes of September 4, 1915, appearing in the

minute book," although of course if he did examine those books that would be a circumstance in his favor perhaps which you might take into consideration.

I will start this again because my interruption there has spoiled the continuity of the request.

"A duty to make inquiry as to whether the shares of Maxim Corporation were fully paid would not have been discharged by examining the proceedings of the directors as shown in the minutes of September 4, 1915, appearing in the minute book, without a further investigation as to the nature and value of the items appraised by the directors at the valuation of $9,999,650."

Now, taking up the defendants' requests to charge, I would say that:

"3. Even if you find that the directors issued the stock to the promoters at a valuation grossly in excess of its true value, and that this fact was known to the directors, the defendant is not liable for any further assessment if he purchased his stock without actual notice at the time of the purchase that it was issued in part payment of property acquired by the corporation at a gross overvaluation, or that the defendant had notice of such facts at the time that he purchased his stock as would have put a reasonable man on inquiry, and that if such inquiry had been made by him he would have discovered the fact that the stock had been issued in purchase of property at a gross overvaluation."

I have charged in almost your exact words the fifth and sixth. I have incorporated them in the former part of my charge.

"9. The proofs show that the defendant was not a subscriber to the company for the stock

which he acquired from Palmer, but that he purchased these shares from Palmer and it is only in case you find actual or constructive notice"—constructive notice means the kind I have mentioned; that is, that the facts were such as to have put a reasonable man on inquiry—"actual or constructive notice on the part of the defendant of a gross overvaluation by the directors of the property for which the shares were originally issued that you can find in favor of the plaintiff."

"12. In determining whether or not the defendant had actual notice of the fact that the stock of the company was originally issued for property at a gross overvaluation or notice of such facts as would have put him on inquiry, you may take into consideration that the certificates for the stock purchased by the defendants expressly recited on their face that they were full paid and non-assessable."

As I recall it, no certificate of stock was ever issued, however, to Mr. Fleissner for the 6,375 shares of stock. The only certificate that was ever issued to him was for 957 shares of stock, and that statement does appear in that certificate, and of course you may take that into consideration as suggested by the request I have just charged.

"13. The defendant cannot be held liable for any assessment for any shares of stock which he purchased from Theodore Palmer"—I decline to charge that.

The next one then is the 17th. I am not going to charge it, but I want to comment on it, and that is the reason I shall read it.

"The order for assessment made in the bankruptcy proceedings in the United States District

Court for the Southern District of New York is not conclusive or binding upon the defendant as to the number of shares for which the defendant can be assessed."

Now, that is so as a matter of law, but there is no proof in this case that he did not own or have a beneficial interest in these 6,375 shares. Therefore, I decline to charge that one.

"18. If you find that the defendant purchased his stock from Theodore Palmer without notice of the fact that it was originally issued for property grossly overvalued, or without notice of such facts as would have put a reasonable man upon inquiry, then you must find for the defendant notwithstanding the order for assessment made in the United States District Court for the Southern District of New York."

"25. The fact that the company was adjudged insolvent in the United States District Court for the Southern District of New York in June, 1919, should not be considered by you in determining whether the property acquired by the company from the promoters in August or September of 1915 in return for its capital stock was grossly overvalued by the directors at the time it was acquired."

I would rather put that in this way. The fact that the company was adjudicated bankrupt may or may not have to do with the fact that this stock was issued at an overvaluation, at a great overvaluation. That is, the mere fact that this company went into bankruptcy in 1919 is not of itself proof that the stock which was issued in 1915 was for property which was excessively overvalued by them.

"26. The fact that the defendant purchased the shares of stock of a member of the syndicate

under the agreement of February 10, 1916, is not of itself sufficient to charge the defendant with notice of any overvaluation by the board of directors in connection with the original issue to the promoters."

That I charge you.

"27. A purchaser of stock in a corporation is not charged with knowledge of the facts shown by the minute books of that corporation as of a time prior to his purchase."

Well, I would say that is a correct request to charge provided he did not know what was in the minute book at that time. I would not say that as a matter of law he is obliged to examine the minute books, but if he is charged with inquiry, if the facts were such as to put him on inquiry, then he would be obliged to examine all data known to him which would give him information upon the subject, even though that included the books of account of the corporation.

That concludes the requests to charge.

Now, the burden of proof is upon the plaintiff to establish its case by the greater weight of the evidence; that is, to establish the fact in this case, because that is the only defense or fact which you are called upon to determine, that Christian Fleissner either had actual notice, of which there is no proof in this case—that is, there is no proof in this case that anybody went to him and told him that there was a gross overvaluation of the property which was taken in exchange for these 999,000 shares of stock—or that they even told him facts from which that should be inferred. But the burden is upon them of showing from all the circumstances and conditions of the case, circumstances under which he

bought the stock, the contents of these syndicate agreements to which he is a party, that he either knew, or that a reasonable man would have been put upon inquiry and would have learned from such inquiry that this stock was issued for a gross overvaluation of property purchased by him. Now, if that appear in this case by the greater weight of the evidence, then the plaintiff is entitled to your verdict.

If the plaintiff is entitled to your verdict, this is a case in which there can be no compromise verdict by you. This is a suit for this assessment. There has nothing been shown in this case which would entitle you to reduce this assessment. The assessment as I have already stated, is $19,572.97. Notice of this assessment was sent to Mr. Fleissner prior to September 7, 1926. Therefore interest is due, if the plaintiff is entitled to a verdict, upon this $19,572.97 from September 7, 1926, to this 24th day of April, 1929, which amounts, according to the figures which have been submitted to me by the attorneys of the plaintiff, to $3,089.19. You might verify that when you go to the jury room—interest from September 7, 1926, to April 4, 1929, at six per cent.

The total of the principal and interest should be the amount of your verdict if you find that the plaintiff is entitled to your verdict. Otherwise, if you find that the evidence does not show that notice, either actual or constructive, was given, your verdict should be for the defendant.

The Foreman of the Jury: Is the interest calculated annually or semi-annually?

The Court: For the whole time. Do not compound it at all. Figure it just for the straight time.

(The jury retired.)

The Court: I want to dictate for the record my action on these various requests. Plaintiff's requests numbers 1, 12, 18, 23, 24, 25, 26, 27 and 28 have been charged by the Court.

Requests numbers 2, 3, 4, 5, 6, 7, 8, 9 10, 11, 13, 14, 15, 16, 17, 19, 21 and 22 have been withdrawn.

I omitted to comment upon No. 20, but I think I have charged it in my charge. I think I have covered it substantially. So as far as the requests are concerned I think there is nothing for the plaintiff to except to.

Now, as to the defendant, I have charged numbers 1, 3, 5, 6, 9, 12, 18, 25, 26 and 27, the 26th I think with a modification.

There have been withdrawn numbers 2, 20, 21, 23 and 24.

No. 22 is a repetition of No. 5, a little shorter, but in almost the exact words.

I decline to charge except as I have charged numbers 4, 7, 8, 10, 11, 13, 14, 15, 16, 17 and 19; and an exception to the refusal of the Court to charge than specifically as requested will be noted upon the minutes.

Exception noted as ground of appeal.

Counsel for the defendants except to the charge of the Court in the following respects: In so far as the Court charged that the certificate for the six thousand odd shares was transferred to Fleissner and that he continued to hold this stock until 1917, the proofs being that the certifi-

cates for the six thousand shares were never transferred to Fleissner and what he got was merely a certificate from the syndicate manager or trustee.

To so much of the charge that says that notwithstanding the fact that the stock was issued and the directors declared the stock was full paid, if there was such gross overvaluation as to amount to a fraud, and even though the company could not have gone to the stockholders if successful—that is, if the company had been successful—yet if the company failed, the creditors might recover the balance up to the par value of the stock.

Furthermore so far as the Court said in the charge that it has been decided by a number of decisions in the Federal and State courts that the Court which has the authority to levy the assessment has the authority to do it, and the Court charged the jury to that effect. The Court charged the jury that the bankruptcy court had jurisdiction to make the assessment, and that after the levy of the assessment, the only defenses which should be interposed are those peculiar to the defendant.

Furthermore, in so far as the Court charged that there were only two principal defenses suggested which were personal, one that he paid full value for the stock, which the Court eliminated, and two, that he had no notice of the assessments or of the proceedings leading up to the assessment.

Exceptions noted as grounds of appeal.

Mr. Feick (Referring to the last point mentioned): Now, that leaves out of consideration the fact that he had no notice of overvaluation. Your Honor may have meant to say that, but No.

2 was that he had no notice of the assessment. Of course, the main defense is that we say he had no notice of the overvaluation. It is true that later on you covered the question of notice, but you specifically say here that there are only two personal defenses, one of which relates to notice of the assessment and of the proceedings leading up to the assessment.

The Court: Now, if the minutes verify that statement perhaps I ought to correct that.

Mr. Feick: I want to draw your Honor's attention to that.

Mr. McCarter: We have no exceptions, your Honor.

(The jury returns.)

The Court: Gentlemen, my attention has been called to an error on the part of the Court in stating to you the issues in this case. This is very important, and an examination of the minutes verifies the mistake.

I said to you, "Two principal defenses are suggested in this suit which are personal." One is that Mr. Fleissner "paid full value for the stock, and the other is that he had no notice of the assessment made against him or of the proceedings which resulted in the assessment against him."

In the intricacies of this case the last statement is not an accurate statement at all. What I should have said is that the one is that he paid full value for the stock, which defense I eliminated subsequently, you will recall, as not being a defense in this case at all, and called attention to the fact that it was only mentioned because that had been suggested by Mr. Baker in

his inquiry as to the amount which Mr. Fleissner paid for the stock. I ought to have said that the only question, therefore, which you have to consider in the case, which is the second of the two defenses I mentioned, is this, that Fleissner had no notice of the issue of the stock of the company for property at a valuation greatly in excess of its true value, or of facts which would have put a reasonable man upon inquiry.

I desire to withdraw these words: "and the other is that he had no notice of the assessment made against him or of the proceedings which resulted in the assessment against him." This I desire to withdraw as an issue in this case. They have been raised in the case, but they are not the questions which you have to decide. The question which you have to decide is, as I have just suggested, whether or not notice of the issue of the stock of the company for property at a valuation greatly in excess of its true value or facts which would have put a reasonable man upon inquiry were at the time of the purchase of this stock within the knowledge of Mr. Fleissner.

Is that a satisfactory correction, satisfactory to both sides?

I think, perhaps, gentlemen, that what I have just told you was made perfectly plain in other portions of the charge, but this was the first statement of the Court to you as to the issues in the case, and there seems to be no good excuse as to why it should have been as inaccurately stated as it was. I think from other portions of the charge that there will be no misunderstanding of the true issues. You may now retire.

(The jury again retires.)

PLAINTIFF'S REQUESTS TO CHARGE.

1. Owners of shares of capital stock of a Delaware corporation, the par value of which has not been fully paid, in cash or property, to the corporation, who did not purchase such shares for value without notice of the fact that the shares were not fully paid, may be held liable ratably for the amount necessary to pay the debts of the corporation, with interest, and the expenses of administration.

2. A proper procedure for enforcing such liability is two-fold: first, an assessment proceeding to which all stockholders and creditors are parties; second, actions at law against the various stockholders to enforce the assessment.

3. When a Delaware corporation has been adjudicated bankrupt, the bankruptcy court is the proper tribunal before which the asssessment proceedings should be instituted.

4. The right to enforce an assessment levied on the unpaid capital stock of a bankrupt Delaware corporation vests in the trustee in bankruptcy, and, therefore, the plaintiff was the proper person to bring this action.

5. The bankruptcy court had jurisdiction to make the order of assessment of August 24, 1926.

6. Notice by mail to Christian Fleissner was sufficient notice of the assessment proceeding in the bankruptcy court.

7. The defendants have the burden of proof under their fourth separate defense of establishing that the cause of action accrued more than six years before the commencement of this action.

8. This action is not barred by the Statute of Limitations.

9. The fact that Christian Fleissner was not a subscriber to the capital stock of Maxim Corporation does not relieve the defendants from liability in this action.

10. The defendants' sixth separate defense is no defense to this action.

11. The defendants' eighth separate defense is no defense to this action.

12. The fact that Christian Fleissner was not the holder of record of the 6,375 shares mentioned in the complaint does not defeat the action in whole or in part, since the liability may be incurred by beneficial owners as well as record holders of unpaid stock in a Delaware corporation.

13. If Christian Fleissner at one time was the beneficial owner of 6,375 shares of the stock of Maxim Corporation, the fact that at various times he disposed of his interest in all of such shares prior to the bankruptcy does not defeat the action in whole or in part.

14. The order of the bankruptcy court, dated August 24, 1926, levying the assessment here sued on, is conclusive against the defendants in this action as to the necessity and propriety of an assessment on the capital stock of Maxim Corporation.

15. The order of the bankruptcy court, dated August 24, 1926, levying the assessment here sued on, is conclusive against the defendants in this action as to the principal and interest of the debts of the corporation and the estimated ex-

penses of administration, for the defraying of which debts and expenses an assessment was necessary.

16. The order of the bankruptcy court, dated August 24, 1926, levying the assessment here sued on, is conclusive against the defendants in this action as to the amount of the deficiency in the assets of the bankrupt estate available for the payment of the debts and the expenses of administration.

17. The order of the bankruptcy court, dated August 24, 1926, levying the assessment here sued on, is conclusive against the defendants in this action as to the omission from assessment of any shares by reason of the financial irresponsibility of the owners or any individual defenses that such owners appeared to have.

18. The order of the bankruptcy court, dated August 24, 1926, levying the assessment here sued on, is conclusive against the defendants in this action as to the fact that 999,965 shares were originally issued with no substantial value being given therefor.

19. The order of the bankruptcy court, dated August 24, 1926, levying the assessment here sued on, is conclusive against the defendants in this action as to the credits allowable on any of the shares of the bankrupt corporation by reason of payments made to the corporation with respect to such shares after the original issue thereof.

20. The order of the bankruptcy court, dated August 24, 1926, levying the assessment here sued on, is conclusive against the defendants in this action as to the amount remaining unpaid

on the shares of the capital stock of the bankrupt corporation or any thereof.

21. The order of the bankruptcy court, dated August 24, 1926, levying the assessment here sued on, is conclusive against the defendants in this action as to the shares on which an assessment was properly levied.

22. The order of the bankruptcy court, dated August 24, 1926, levying the assessment here sued on, is conclusive against the defendants in this action as to the rate per shares of the assessment.

23. If Christian Fleissner acquired beneficial ownership of 6,375 shares of capital stock of Maxim Corporation under circumstances which would have induced a reasonable man to inquire whether such shares had been fully paid, he is chargeable with knowledge of all facts which a reasonable inquiry would have disclosed.

24. Among the circumstances to be considered by you in finding whether Christian Fleissner was under a duty to make further inquiry when he acquired his interest in the syndicate of February 10, 1916, are the following:

The difference between the price per share paid by the syndicate and the par value of the stock; the difference between the total par value of the issued stock and the apparent value of the assets of the corporation; whether the stock was purchased by the syndicate in the open market or by direct negotiation with the previous owners; whether a sufficient time had elapsed since the formation of the company to explain the difference between the par value of the stock and the price paid by the syndicate; whether the

stock acquired by the syndicate had become a seasoned article of daily merchandise on the stock market; whether the price paid by the syndicate was approximately the market price for the stock.

25. If you find that Christian Fleissner became a member of the syndicate of February 10, 1916, then he was chargeable with notice of all the facts stated in the recitals of the syndicate agreement of that date, although he did not sign the original syndicate agreement.

26. If Christian Fleissner acquired the 6,375 shares mentioned in the complaint under circumstances which would have put a reasonable man on inquiry as to whether the stock were fully paid or not, then he was not entitled to rely upon the statement appearing in the stock certificates to the effect that the stock was fully paid and non-assessable.

27. If Christian Fleissner was under a duty to make reasonable inquiry as to whether the stock acquired by him was fully paid or not, he was chargeable with knowledge of all of the facts which would have been disclosed by examination of the corporate records and such further reasonable investigation as an examination of the corporate records would have induced.

28. A duty to make inquiry as to whether the shares of Maxim Corporation were fully paid would not have been discharged by examining the proceedings of the directors as shown in the minutes of September 4, 1915, appearing in the minute book, without a further investigation as to the nature and value of the items appraised by the directors at the valuation of $9,999,650.

DEFENDANTS' REQUESTS TO CHARGE.

1. The burden of proof is on the plaintiff.

2. If you find from the evidence before you that the stock purchased by the defendant was issued by the corporation for property which was valued by the directors in the honest exercise of their judgment at an amount which they believed to be equivalent to the par value of the stock issued therefor, then you must find in favor of the defendant.

3. Even if you find that the directors issued the stock to the promoters at a valuation grossly in excess of its true value, and that this fact was known to the directors, the defendant is not liable for any further assessment if he purchased his stock without actual notice at the time of the purchase that it was issued in part payment of property acquired by the corporation at a gross overvaluation, that the defendant had notice of such facts at the time that he purchased his stock as would have put a reasonable man on inquiry, and that if such inquiry had been made by him he would have discovered the fact that the stock had been issued in purchase of property at a gross overvaluation.

4. If you find that the defendant purchased his stock without actual notice of the fact that the property for which the stock was originally issued was grossly overvalued at the time of his purchase, then you must find for the defendant.

5. In determining whether or not the defendant had knowledge that the stock which he purchased was issued for property at a gross overvaluation and was not full paid and non-assessable, you must confine your inquiry as to whether

he had knowledge of such overvaluation at the time that he purchased the stock or at least that he had notice of such facts at that time as would put a reasonable man on inquiry, and that if such inquiry had been made by him, he would have discovered the fact that the stock had been issued in purchase of property at a gross overvaluation. If you find that he did not have such knowledge, or notice of facts as would put a reasonable man on inquiry, at the time that he purchased the stock, the fact that he later acquired such knowledge or such notice of facts as would put a reasonable man on inquiry, will not render the defendant liable and your verdict must be for the defendant.

6. The plaintiff's claim is admittedly only in connection with the purchase of the stock by the defendant from Theodore Palmer and there is no claim for any assessment against the defendant in connection with the purchase of any other stock of the company.

7. Even if you find that the defendant had actual knowledge of the fact that the stock which he purchased from Theodore Palmer was originally issued to the promoters in return for property at a gross overvaluation, or notice of such facts as would put a reasonable man on inquiry, the defendant is not liable for any assessment on any shares so purchased by him which he later sold and which were actually transferred on the books of the company prior to the time that the company was decreed insolvent in the bankruptcy proceedings in the United States District Court for the Southern District of New York.

8. In determining whether the defendant's shares or any part of them were transferred out of his name on the books of the company, you must consider the transfer sheets and ledger sheets which are in evidence and marked Exhibits P. 35 and P. 37-1.

9. The proofs show that the defendant was not a subscriber to the company for the stock which he acquired from Palmer but that he purchased these shares from Palmer and it is only in case you find actual or constructive notice on the part of the defendant of a gross overvaluation by the directors of the property for which the shares were originally issued that you can find in favor of the plaintiff.

10. In determining the number of shares purchased by the defendant from Theodore Palmer for which the assessment is asked by the plaintiff, you must deduct those shares which he sold for the benefit of the company and the proceeds of which he loaned to the company.

11. The defendant cannot be assessed on those shares of stock which he originally purchased from Theodore Palmer but which you find under the evidence he subsequently sold or permitted to be sold for the benefit of the company lending the proceeds to the company in return for its notes where the transfers of the shares so sold were made on the books of the company prior to the decree of insolvency in the bankruptcy proceedings.

12. In determining whether or not the defendant had actual notice of the fact that the stock of the company was originally issued for property at a gross overvaluation or notice of such facts

as would have put him on inquiry, you may take into consideration that the certificates for the stock purchased by the defendant expressly recited on their face that they were full paid and non-assessable.

13. The defendant cannot be held liable for any assessment for any shares of stock which he purchased from Theodore Palmer but which were never transferred into his name on the books of the company.

14. The defendant cannot be held liable for any assessment on any of the shares of stock which he purchased from Theodore Palmer but which subsequently he returned to the treasury of the company prior to the decree of insolvency in the United States District Court for the Southern District of New York.

15. The order for assessment made in the bankruptcy proceedings in the United States District Court for the Southern District of New York is not conslusive and binding upon the defendant upon the question of whether or not the stock was full paid and non-assessable.

16. The order for assessment made in the bankruptcy proceedings in the United States District Court for the Southern District of New York is not conclusive and binding upon the defendant upon the question of whether or not the stock was originally issued by the company at a gross or fraudulent overvaluation by the directors, or whether the defendant had notice of such overvaluation.

17. The order for assessment made in the bankruptcy proceedings in the United States District Court for the Southern District of New

York is not conclusive or binding upon the defendant as to the number of shares for which the defendant can be assessed.

18. If you find that the defendant purchased his stock from Theodore Palmer without notice of the fact that it was originally issued for property grossly overvalued, or without notice of such facts as would have put a reasonable man upon inquiry, then you must find for the defendant notwithstanding the order for assessment made in the United States District Court for the Southern District of New York.

19. If you find that the defendant sold the shares of stock which he purchased from Theodore Palmer and that these shares of stock were transferred to the purchaser or purchasers on the books of the company prior to the decree of insolvency made in the United States District Court for the Southern District of New York, then you must find for the defendant notwithstanding the order for assessment made in the District Court.

20. If you find from the evidence before you that the defendant did not receive notice of the proceedings in the United States District Court for the Southern District of New York to assess the stock of the company, then you must find in favor of the defendant.

21. In the absence of actual fraud, the valuation placed upon the property acquired by the company from the promoters for which the stock of the company was issued as full paid and non-assessable, is conclusive as to the value of such property and the stock purchased by the defendant is not liable to a further assessment.

Defendants' Requests to Charge.

22. You must find for the defendant unless you find from the evidence before you that the defendant at the time he purchased his stock from Theodore Palmer actually knew of this fraudulent overvaluation or had notice of such facts as should have put him on inquiry and that such inquiry would have disclosed such fraud. The fact that he later knew of such overvaluation will not render him liable.

23. If you find that the directors of the company acted honestly in purchasing the property for the company in return for the issuance of its capital stock and in fixing the value of that property, then you must find for the defendant even though in your judgment the property was not worth the amount fixed by the board of directors.

24. Evidence of what some of the property acquired by the company from the promoters in August or September of 1915 was sold for by the company at a later date should not be considered by you in determining the value of this property at the time it was acquired by the company from the promoters.

25. The fact that the company was adjudged insolvent in the United States District Court for the Southern District of New York in June, 1919, should not be considered by you in determining whether the property acquired by the company from the promoters in August or September of 1915 in return for its capital stock was grossly overvalued by the directors at the time it was acquired.

26. The fact that the defendant purchased the shares of stock of a member of the syndicate

under the agreement of February, 1916, is not in itself sufficient to charge the defendant with notice of any overvaluation by the board of directors in connection with the original issue to the promoters.

27. A purchaser of stock in a corporation is not charged with knowledge of the facts shown by the minute books of the corporation as of a time prior to his purchase.

INDEX TO EXHIBITS

		Off'd	P't'd
P. 1.	Certificate of Incorporation of Maxim Munitions Corporation	58	283
P. 2.	Chapter 65 of the Revised Code of Delaware, 1915	59	283
P. 3.	Minutes of Directors' Meeting, September 4, 1915	61	286
P. 4.	Letter—September 3, 1915. Robert Sweeny to Maxim Munitions Corporation	61	290
P. 5.	Letter—August 26, 1915. Hudson Maxim to Robert Sweeny	62	292
P. 6.	Assignment by J. H. Brown to Robert Sweeny of Brown Air-cooled Shoulder Machine Rifle	64	297
P. 7.	Assignment by Robert Sweeny to Maxim Munitions Corporation of Brown Air-cooled Shoulder Machine Rifle	65	298
P. 8.	Agreement—Fuller Manufacturing Company and The Maxim Munitions Corporation, dated September 3, 1915	65	298
P. 9.	Agreement—Hudson Maxim and Maxim Munitions Corporation, September 9, 1915	65	303
P. 10.	Agreement—Hudson Maxim and Maxim Munitions Corporation, September 22, 1915	66	310
P. 11.	Minutes of Executive Committee Meeting, September 9, 1915	67	313
P. 12.	Minutes of Executive Committee Meeting September 30, 1915	67	315
P. 13.	Minutes of Special Meeting of Directors, December 10, 1915	67	317
P. 14.	Letters Patent No. 1228827 for Recoil-Operated Firearms	68	319
P. 15.	Model of Brown Air-cooled Shoulder Machine Rifle (Not Printed)	68	
P. 16.	Letter—September 4, 1915. J. H. Brown to Maxim Munitions Corporation	69	322
P. 17.	Letter—September 4, 1915. Beckert to J. H. Brown	69	324
P. 18.	Letter—December 16, 1915. Maxim Munitions Corporation to United States Mortgage & Trust Co.	70	325
P. 19.	Minutes of Executive Committee Meeting, November 8, 1915	73	326
P. 20.	Warranty Deed. Fuller Manufacturing Company to Maxim Munitions Corporation	75	329
P. 21.	Map and picture of land and buildings of Fuller Manufacturing Company (Not Printed)	76	
P. 22.	Letter—January 5, 1916. Maxim Munitions Corporation to United States Mortgage & Trust Co.	80	330
P. 23.	Minutes of Executive Committee Meeting, September 9, 1915	81	331
P. 24.	Letter—December 15, 1915. Maxim Munitions Corporation to United States Mortgage & Trust Co.	84	334
P. 25.	Balance Sheet as of December 31, 1915	87	335
P. 26.	Journal, September 1, 1915	87	336
P. 27.	Trial Balance, December 31, 1915	87	337
P. 28.	Ledger Sheet No. 31	88	339
P. 29.	O'Bannon Syndicate Agreement	91	339
P. 30.	Participation Certificate	93	344

		Off'd	P't'd
P. 31.	Pages 6, 8 and 12 of Cash Book	94	346
P. 32	for Identification—(Not Printed)	96	
P. 33.	Abandoned Application of Hudson Maxim, Serial No. 871,883	102	348
P. 34.	Abandoned Application of Hudson Maxim, Serial No. 3489	104	375
P. 35.	Stock Transfer Sheets of United States Corporation Company, Transfer Agent for Maxim Munitions Corporation	107	392
P. 36.	Stock Certificate of Maxim Corporation	107	398
P. 37.	Escrow Agreement—Taylor-Alcorn Syndicate	137	399
P. 38.	40,000 share Syndicate Agreement	137	403
P. 39.	Ledger Sheets (same as D. 2 for Identification offered in evidence at page 110)	144	409
P. 40.	Receipt for Escrow Certificate from Otto H. Oppenheimer	150	410
P. 41.	Agreement to donate stock to Davis & Durkin	152	411
P. 42.	Letter—July 20, 1917 in re consent to donate stock to Davis & Durkin	154	413
P. 43.	Agreement of May 28, 1917 and Receipt dated July 2, 1917	155	414
P. 44.	Agreement of August 10, 1917	156	418
P. 45.	Summary of Notes Issued to Christian Fleissner	158	420
P. 46.	List of checks of Maxim Corporation payable to Christian Fleissner	160	421
P. 47.	Pages 77, 82 and 154 B of Journal of Maxim Munitions Corporation	162	422
P. 48.	Letter—August 21, 1916. Hudson Maxim to J. W. O'Bannon	163	423
P. 49.	Agreement—Laurence Angel and Maxim Munitions Corporation, November 18, 1916	166	424
P. 50.	Certificate of Change of Name to Maxim Corporation	192	430
P. 51.	Certified Copy of Order adjudicating Maxim Corporation a bankrupt	193	430
P. 52.	Certified Copy of Order of Reference to Referee in Bankruptcy	194	430
P. 53.	Petition of Trustee for Assessment on Stock	195, 200	431
P. 54.	Order to Show Cause upon Petition for Assessment	196, 200	452
P. 55.	Answers to Petition for Assessment	197, 200	457
P. 56.	Order levying Assessment on Capital Stock	197, 200	458
P. 57.	Demand for payment of Assessment	203, 207	459
P. 58.	Proof of Claim of Christian Fleissner	204	460
P. 59.	Return Receipt	205	461
P. 60.	Letters Patent issued to Hudson Maxim July 7, 1912, No. 1,031,279	208	462
P. 61.	Letters Patent issued to Hudson Maxim July 15, 1919, No. 1,310,200	214	466
P. 62.	Letters Patent issued to Hudson Maxim July 15, 1919, No. 1,310,201	215	470
P. 63.	List of quotations of stock of Maxim Munitions Corporation, September 1, 1916 to December 31, 1916	241	474
D. 1.	Transfer sheet	108	475

Exhibits P. 1, P. 2.

EXHIBIT P. 1.

[Exemplified copy of Certificate of Incorporation of Maxim Munitions Corporation, as filed in the Office of the Secretary of State of Delaware August 24, 1915.]

EXHIBIT P. 2.

(Revised Code of Delaware 1915)

"CHAPTER 65.

* * * * *

"CORPORATIONS—Article 1.

General Provisions Respecting Corporations.

* * * * *

"1928. Sec. 14. Issuance of Stock for Labor or Real or Personal Property:—Subscriptions to, or purchase of, the capital stock of any corporation organized or to be organized under any law of this State may be paid for, wholly or partly, by cash, by labor done, by personal property or by real property or leases thereof; and the stock so issued shall be declared and taken to be full paid stock and not liable to any further call, nor shall the holder thereof be liable for any further payments under the provisions of this Chapter. And in the absence of actual fraud in the transaction, the judgment of the Directors, as to the value of such labor, property, real estate or leases, shall be conclusive.

22 Del. Laws, Ch. 166, §1; 23 Del. Laws, Ch. 155, §1."

* * * * * *

Exhibit P. 2.

"1934. Sec. 20. Stockholders Liability for Part Paid for Stock:—When the whole capital stock of a corporation shall not have been paid in, and the assets shall be insufficient to satisfy the claims of its creditors, each stockholder shall be bound to pay on each share held by him the sum necessary to complete the amount of the par value of such share as fixed by the charter of the company or its certificate of incorporation, or such proportion of that sum as shall be required to satisfy the debts of the company, which said sum or proportion thereof may be recovered as provided for in Section 49 of this Chapter, after a writ of execution against the corporation has been returned unsatisfied, as provided for in Section 51 of this Chapter.

21 Del. Laws, Ch. 273, §14; 22 Del. Laws, Ch. 166, §1."

* * * * * *

"1963. Sec. 49. Liability of Officers &c; Actions for:—When the officers, directors or stockholders of any corporation organized under this Chapter shall be liable by the provisions of this Chapter to pay the debts of the corporation, or any part thereof, any person to whom they are liable may have an action on the case against any one or more of them, and the declaration shall state the claim against the corporation, and the ground on which the plaintiff expects to charge the defendants personally; or the person to whom they are liable may have his remedy by bill in Chancery.

21 Del. Laws, Ch. 273, §44; 22 Del. Law, Ch. 166, §2."

* * * * * *

Exhibit P. 2.

"1965. Sec. 51. No Suit Against Director or Stockholder Until Judgment Against Corporation:—No suit shall be brought against any director or stockholder for any debt of a corporation organized as aforesaid, of which he is such director or stockholder, until judgment be obtained therefor against such corporation and execution thereon returned unsatisfied.

21 Del. Laws, Ch. 273, §46; 22 Del. Laws, Ch. 166, §3."

* * * * * *

"1996. Sec. 82. Amendment or Repeal of This Chapter; Effect of:—This Chapter may be amended or repealed, at the pleasure of the Legislature, but such amendment or repeal shall not take away or impair any remedy against any corporation under this Chapter, or its officers, for any liability which shall have been previously incurred; this Chapter and all amendments thereof shall be a part of the charter of every such corporation except so far as the same are inapplicable and inappropriate to the objects of such corporation.

22 Del. Laws, Ch. 166, §40."

* * * * * *

EXHIBIT P. 3.

MINUTES OF DIRECTORS' MEETING MAXIM MUNITIONS CORPORATION

held at office of the Company, 52 Broadway, New York City, September 4, 1915, at 9:30 A. M.

President Mr. Scully called the meeting to order.

Mr. Taylor, Secretary, recorded

Mr. Scully presented waiver of notice signed by all the directors of the Company except Hudson Maxim whose resignation was presented at the same time, having been in the hands of the Secretary prior to the date of this meeting. The waiver, together with the resignation of Mr. Maxim as a director, was ordered spread upon the next free page of the minutes.

All the members of the board of directors being present at the meeting the resignation of Mr. Maxim was accepted.

On motion duly made, seconded and carried

Mr. Winfield P. Porter was ~~elected~~ appointed director of the Company in place and stead of Mr. Maxim resigned. Mr. Porter, being Present, he accepted such election, having previously qualified by the ownership of the shares of stock requisite for membership on the board, immediately entered upon his duties.

The Secretary presented the certificate of the Secretary of State of New York showing the compliance by this corporation with the requirements of law to authorize it to do business in this State. The same was ordered filed in the minutes.

Exhibit P. 3.

The Secretary presented a letter, dated September 3rd, 1915, addressed to the board of directors of the Company signed by Robert Sweeny; attached to said letter was a letter dated August 26th, 1915, signed by Hudson Maxim, an assignment by J. H. Brown to Robert Sweeny of all right, title and interest in and to "Brown Air-cooled Shoulder Machine Rifle" and a further assignment of Robert Sweeny to this corporation covering the same property, both dated and acknowledged September 4, 1915; also an agreement, dated September 3rd, 1915, between Fuller Manufacturing Co., and this corporation fully executed by the Fuller Manufacturing Co., and not yet executed by this corporation; and also check of Robert Sweeny for $10,000 drawn to the order of this corporation.

Upon the presentation of his letter Mr. Sweeny withdrew from the room. The said letter of Mr. Robert Sweeny addressed to this corporation was read in full at the meeting together with the papers and communications attached thereto.

After full and lengthy consideration and discussion among the members of the board of directors as to the value of and advisability of accepting Mr. Sweeny's offer contained in said letter, dated September 3, 1915, the following resolution was adopted:

WHEREAS, the offer made by Robert Sweeny dated September 3, 1915, to this corporation to turn over certain properties as outlined in said letter and the papers attached thereto in exchange for $9,999,650 in cash or full paid capital stock of this corporation contains matters with which several members of this board are familiar, and refers to inventions, patents and services

Exhibit P. 3.

of individuals which, it is the sense of this board, are very valuable, and

WHEREAS, the properties, rights and privileges proposed to be transferred to this Company the terms of said proposition, are in the judgement of this Board of Directors, suitable and appropriate for the purposes of this Company and it is the judgement of the Directors, after due consideration and discussion, that it is necessary and advantageous and for the best interest of this Company, that it purchase and acquire said property and that the consideration and purchase price mentioned in said written proposition is the fair value of said property which this Board hereby adjudges and declares by the passage of these preambles and resolutions.

WHEREAS, it is the unanimous opinion of this board of directors that it is to the best interest of the corporation to accept Mr. Sweeney's offer upon the terms set forth therein, making payment in stock instead of cash, however. Now, therefore, be it

RESOLVES that this board hereby accepts on behalf of this Corporation the proposition submitted by Robert Sweeny in writing under date of September 3, 1915, upon the terms and conditions therein set forth, and the proper officials of the Company are hereby authorized, empowered and directed to consummate the same as speedily as possible.

IT IS FURTHER RESOLVED that the Secretary be and he hereby is instructed to advise Mr. Sweeny in writing of the acceptance of said offer.

The Secretary forthwith communicated with Mr. Sweeny who thereupon returned to the

Exhibit P. 3.

meeting and was advised of the action of the board as set forth above.

On motion duly made and carried it was

RESOLVED that the Secretary be instructed to spread copies of the offer of Mr. Sweeny, together with the papers and exhibits attached thereto upon the next free pages of these minutes, retaining the originals in his custody.

On motion duly made and carried the proper officials of the Company were instructed to consummate the agreement previously executed by the Fuller Manufacturing Co. as party of the first part with this corporation, dated September 3, 1915, which said agreement was submitted as part of Mr. Sweeny's offer. There being no further business coming before the meeting it was on motion duly carried adjourned.

B. F. TAYLOR,
Secretary.

EXHIBIT P. 4.

MAXIM MUNITIONS CORPORATION
FIFTY-TWO BROADWAY
NEW YORK

September 3, 1915.

Board of Directors,
Maxim Munitions Corporation,
New York City.

Gentlemen:

I am, as you know, familiar with the organization of your corporation, the Maxim Munitions Corporation, with a capital of $10,000,000 divided into 1,000,000 shares of a par value of $10. As I am aware that your company is incorporated for the purpose among others, of manufacturing munitions of war, I make you herewith the following proposition.

I will transfer, set over and assign to your corporation all right, title and interest in and to a certain invention and improvement known as the "Brown Air Cooled Shoulder Machine Rifle" which is designed to accomplish practically the result of a machine gun and weighs little more than the ordinary rifle, being shot from the shoulder.

I have also made arrangements to secure for the services of your corporation the organization headed by Edward H. Beckert, who has, during the last few months, built up an organization technically equipped for the manufacture of munitions of war and in particular, ordnance. Mr. Beckert's organization of which I shall give you the advantage, comprises among others, Edwin B. Hotchkiss, an eminent expert in armament, Professor Charles E. Pellew of

Exhibit P. 4.

Columbia University, Dr. Darlington and many others, well known for their technical ability in the special line in which this company will engage together with an organization of master mechanics and mechanics skilled for this particular work. The consideration for the procurement of this organization other than necessary salaries and retainers will be provided by me.

In addition I will transfer to you the benefits of my understanding and agreement with Mr. Hudson Maxim whose reputation as an expert is well-known to your board. I attach to this offer a letter from Mr. Maxim which explains itself and provides a method by which this company can secure exclusive licenses to many valuable inventions of Mr. Maxim, and future inventions as well as his services as a Consulting Engineer as is more fully set out in the attached letter. I may add that the offer contained in this letter has been verbally extended for a period of two weeks from Tuesday, September the 7th, with an option on the part of Mr. Maxim for another two weeks. In the event that your company wishes to complete the arrangement with Mr. Maxim, I undertake to provide for him the stock which is mentioned as a consideration in Mr. Maxim's offer, providing your company accepts the proposition I make you herewith.

In addition I have negotiated the purchase of an Assembling Factory and Plant located at New Haven, Conn. which has been selected and recommended by the Technical organization above mentioned as the most suitable obtainable. I shall secure the benefits of this contract for your company if the offer contained in this

letter is accepted and for the purpose of permitting the company to take advantage of this contract to purchase the Assembling Plant, I shall advance to the company $10,000 in cash forthwith upon your acceptance of this offer.

As a consideration for my transfer to your company as above set out, I will accept $9,999,650 or in lieu thereof an equal amount in par value of your company's stock. I assure you that in the event that your board accepts this offer I shall co-operate for the best interests of the company. I am awaure that many members of your board are familiar with the value of the rights and organization which are the subject of this offer.

Awaiting your early consideration and decision, I am,

Very truly yours,

ROBERT SWEENY.

RS-S

EXHIBIT P. 5.

New York, N. Y. August 26th, 1915.

Mr. Robert Sweeney,
56 Broadway,
New York, N. Y.

Dear Sir:—

I, the undersigned, Hudson Maxim, hereby agree that I will assign to you or to the Maxim Munitions Corporation, a Delaware corporation with a capital stock of Ten Million Dollars ($10,000,000) par, divided into shares of Ten Dollars ($10) each, exclusive licenses for the

Exhibit P. 5.

United States and foreign countries of the patents and inventions described in a schedule hereto attached and marked Schedule *"A"*, upon the accomplishment of the following conditions:

First: The said licenses shall be transferred in their entirety to said corporation.

Second: Similar and exclusive licenses to the inventions and patents of Brown for improvements knows as the "Brown Air Cooled Shoulder Machine Rifle" shall be assigned to said corporation.

Third: An agreement shall be procured by you and signed by parties of financial responsibility satisfactory to me, agreeing to pay into the treasury of said corporation the sum of Two million dollars ($2,000,000) as needed by said corporation for its corporate purposes and upon demand of its proper officers.

Fourth: Stock of said corporation, organized as above described, full paid and non-assessable, to the extent of Ninety-three thousand nine hundred ninety-six (93,996) shares of the par value of Ten Dollars ($10) each shall be delivered to me.

Fifth: A contract, satisfactory to me, shall be executed between said corporation and myself providing the following:

(a) That the company will not enter the manufacture of explosives while I am connected with it, either as an officer or otherwise.

(b) That I shall act as Consulting Engineer for a period of five years, giving such time and attention to the business of the corporation as may reasonably be necessary to instruct the employees thereof in regard to the operation of

Exhibit P. 5.

the various inventions included in Schedule *A* hereto attached, but I shall not be required to reside in America permanently nor to devote my entire time and attention to this work.

(c) That the company shall pay me a salary of Twenty-five thousand dollars ($25,000) a year in cash, in equal monthly instalments, for a period of five years beginning at the date of the contract.

(d) That I will serve as President of the company for one (1) year.

(e) That during the five years succeeding the first five years I will further act as Consulting Engineer with the limitations above mentioned at a salary of Twelve thousand five hundred dollars ($12,500) a year, and thereafter the company shall pay me Twelve thousand five hundred dollars ($12,500) a year during such period as it shall retain the licenses under any of the inventions mentioned in Schedule *A* or in the following clause (f).

(f) That I will give the company an exclusive license to any future inventions made by me in relation to guns, projectiles, aerial torpedoes, periscopes and position indicators, to extend during such period as the payments hereinbefore referred to are made to me, said inventions to be patented through my patent attorneys, if I desire, but at the expense of the company. The company to elect in what countries patents shall be taken, and if the company does not notify me in writing that it desires such patents to be taken out for its benefit within thirty (30) days of the time that I may disclose such inventions to the Company and request its decision as to whether it wants patents to be taken out for its benefit, then and in that event I shall

be at liberty to take out such patents for my own benefit and at my expense, and shall at all times be at liberty to take out patents for such inventions at my own expense and for my own benefit in such countries as the Company does not elect to be protected in.

(g) That the company will take such steps as may be reasonably necessary to develop and work out and market or turn to account each invention in Schedule *A* hereto attached or that shall be subject to license under the preceding clause "f" within one (1) year from the time I may request the Company to do so, failing which the invention involved shall be released from the operation of the agreement and the license in respect thereto shall be cancelled and such patent shall become my property as if this agreement had not been made.

(h) That out of the first Fifteen million dollars ($15,000,000) of orders which the company may receive for property in which it deals from General Hermonius, Colonel S. Khatunzeff, Ivan Narodny, Mr. Harold Roberts, or the Importing & Exporting Trading Company, Duke Pugliatti, Comte du Tar, Commander Pfister, N. C. Adossides, or from parties whom they represent, or who may represent them, there shall be paid to me from the funds of the company Five percent. (5%) of the total amount of the purchase price of said property from time to time as said amounts are received by the corporation and until I shall have received the full amount of Five percent. (5%) on Fifteen Million Dollars ($15,000,000).

(i) That the company shall secure the payment to me of the first one hundred thousand dollars ($100,000), whether of salary or of said

Exhibit P. 5.

Five percent. (5%) on account of said contracts, which ever may first become due me, by a bond with sufficient surety, or by deposit of One hundred thousand dollars ($100,000) in cash in some Bank under an escrow agreement, satisfactory to me.

Sixth: When the above matters and things shall have been fully accomplished, or co-incidentally therewith, I will grant said licenses either to you or to the corporation, as you may request, and will also consent on my part to the use of the name "Maxim" in the name of the corporation.

Seventh: In case the above conditions are not accomplished on or before the 3rd day of September, 1915, this offer shall be considered to be withdrawn.

Very truly yours,

HUDSON MAXIM.

SCHEDULE "A"

Improvements in Position Indicators
Two applications for United States, Letters Patent on which have been filed.

Improvements in Periscopes
Two applications for United States, Letters Patent on which have been filed.

Improvements in Range Finding Guns, which have been patented in the United States.

Aerial Torpedoes,—Patent not applied for.

Bomb Throwing Devices for Trench Work, Patent not applied for.

Exhibit P. 6.

EXHIBIT P. 6.

For value received, receipt whereof is hereby acknowledged, I hereby sell, assign, transfer and set over unto ROBERT SWEENY the full and exclusive right to a certain invention known as "Brown Air-cooled Shoulder Machine Rifle" as fully set forth and described in the specification to be prepared and executed by me, preparatory to obtaining letters patent of the United States therefor; and I do hereby authorize and request the Commissioner of Patents to issue the said letters patent to said ROBERT SWEENY as the assignee of my entire right, title and interest in and to the same for his sole use and behoof; this assignment conveying all right, title and interest of any nature whatsoever in said invention, other than that now and heretofore owned by said ROBERT SWEENY.

IN WITNESS WHEREOF, I have executed this assignment this 4th day of September, 1915.

J. H. BROWN.

[Acknowledgment]

Exhibits P. 7, P. 8.

EXHIBIT P. 7.

For value received, receipt whereof is hereby acknowledged, I hereby sell, assign, transfer and set over unto the MAXIM MUNITIONS CORPORATION the full and exclusive right to a certain invention known as "Brown Air-cooled Shoulder Machine Rifle" as fully set forth and described in the specification to be prepared and executed preparatory to obtaining letters patent of the United States therefore; and I do hereby authorize and request the Commissioner of Patents to issue the said letters patent to said MAXIM MUNITIONS CORPORATION as the assignee of my entire right, title and interest in and to the same for its sole use and behoof;

IN WITNESS WHEREOF, I have executed this assignment this 4th day of September, 1915.

ROBERT SWEENY.

[Acknowledgment]

EXHIBIT P. 8.

AGREEMENT made at New Haven, Connecticut, this third day of September, 1915, between THE FULLER MANUFACTURING COMPANY, a corporation organized under and pursuant to the laws of the State of Connecticut, and located in the Town of New Haven, in said State of Connecticut, party of the first part, and THE MAXIM MUNITIONS CORPORATION a corporation organized under and pursuant to the laws of the State of Delaware, party of the second part, in manner following:

Exhibit P. 8.

The said party of the first part, in consideration of the payment to it, of five thousand dollars, by said party of the second part, (the receipt whereof is hereby acknowledged) hereby agrees to sell to said party of the second part, all that certain piece or parcel of land, with the factory building and the appurtenances thereto belonging, located in said Town of New Haven, and bounded: SOUTH by Peck Street, about five hundred and seventy-four feet; WEST by Blatchley Avenue, about two hundred and fifty-seven feet; NORTH by land of the New York, New Haven and Hartford Rail Road Company, about seven hundred and fifty-four feet; EAST by land formerly of Hiram Camp, about sixty-one feet; SOUTH again by land formerly of Hiram Camp, about seventy-four feet; and EAST again by land formerly of Hiram Camp, in part and in part by land formerly of Thomas Sault, in all, about four hundred and sixty-five and one-half feet; Said real estate is subject to a right of way sixteen feet in width, running along the last described East line; together with all the general machine tools but in no wise to include the special machinery and tools, fixtures and appliances used in the special business of said party of the first part;

And said party of the second part hereby agrees to purchase said premises, and to pay for the same, in addition to the amount already paid, the sum of two hundred and forty-five thousand dollars, as follows: ten thousand dollars, on or before sixty days from the date of this agreement; ten thousand dollars, on or before ninety days from the date of this agreement, and upon the payment to said party of the first part of said last described ten thou-

Exhibit P. 8.

sand dollars, on or before ninety days from the date of this agreement, said party of the first part, will execute and deliver to said party of the second part, a good and sufficient warranty deed, at its own proper cost and expense, containing all the covenants usual in the State of Connecticut, conveying to them, the title to said property above described in fee simple, free from all incumbrances whatsoever, except building lines and taxes on the List of 1915, and upon the delivery to said party of the second part of said warranty deed, said party of the second part, will execute, acknowledge and deliver to said party of the first part, a mortgage deed of the premises hereby agreed to be sold, which mortgage shall be for two hundred and twenty-five thousand dollars, securing five several notes, as follows: the first of said to be for the sum of twenty-five thousand dollars, and payable on or before six month from the date of this agreement; the second of said notes to be for the sum of twenty-five thousand dollars, and payable on or before nine months from the date of this agreement; the third of said notes to be for the sum of twenty-five thousand dollars, and payable on or before twelve months from the date of this agreement; the fourth of said notes to be for the sum of twenty-five thousand dollars, and payable on or before eighteen months from the date of this agreement; and the fifth of said notes to be for the sum of one hundred and twenty-five thousand dollars, and payable on or before ten years from the date of this agreement, and all of said notes drawing interest at the rate of five per cent. per annum, payable semi-annually, and each and all of said notes shall contain a proviso, that if

Exhibit P. 8.

the payment of interest, of one, any or all of said notes shall remain in arrears and unpaid for the period of thirty days after the same shall become due, the principal of said note or notes shall immediately thereafter at the option of the holder thereof, become due and payable on demand.

Said mortgage deed to contain a clause that said party of the second part shall keep said premises insured and payable to the party of the first part, at all times, in an amount which shall equal the amount remaining unpaid upon said mortgage.

Said party of the first part hereby agrees to give said party of the second part, immediate possession of such portions of the premises above described as are not needed by said party of the first part to complete said contracts above described, and said party of the second part agrees to allow said party of the first part the use of all machines so far as may be necessary for a period of sixty days from the date of this agreement, in order that said party of the first part may complete all contracts now in process of completion, and the further period of thirty days to remove from said building, the property excepted and not hereby agreed to be transferred by said party of the first part.

Said party of the first part hereby reserves possession of the building known as the Store Room, for a period of five months from the date of this agreement, and it is hereby agreed by and between the party of the first part and the party of the second part, that said party of the second part will not interfere in any way with the work of said party of the first part while said party of the first part occupies said premises above described.

Exhibit P. 8.

All taxes, insurance premises, water rates, and all other kindred matters to be adjusted to the date of the transfer of said property.

And it is understood that the stipulations, and agreements, as aforesaid are to apply to and bind the successors and assigns of the respective parties.

In Witness Whereof, the parties have hereunto set their hands and seals, this 3rd day of September, 1915, said corporation, The Fuller Manufacturing Company, by E. C. Fuller its President and said The Maxim Munitions Corporation by Robert Sweeny its Vice President

THE FULLER MANUFACTURING COMPANY,

by E. C. Fuller
its President

In presence of,

Albert Widmann
George Leete Rich

THE MAXIM MUNITIONS CORPORATION

by Robert Sweeney [in pencil]
its Vice President

B. F. Taylor [in pencil]
Secretary

EXHIBIT P. 9.

THIS AGREEMENT made and entered into this 9th day of September, 1915, by and between HUDSON MAXIM, hereinafter referred to as Maxim, Party of the First Part, and THE MAXIM MUNITIONS CORPORATION, a corporation existing under the laws of the State of Delaware, hereinafter referred to as Corporation, Party of the Second Part,

WITNESSETH:

WHEREAS, the Corporation is desirous of securing the services of Maxim in a consulting and advisory capacity relating to munitions of war, and also as the president of the Corporation; and

WHEREAS, Maxim is willing to serve the Corporation upon the terms and conditions hereinafter expressed,

NOW, THEREFORE, for and in consideration of the sum of One Dollar ($1) and other valuable considerations from each to the other moving, the receipt of which is hereby acknowledged, and in consideration of the faithful performance of the mutual covenants and obligations hereinafter mentioned, it is covenanted and agreed as follows, to wit:

1. The Corporation agrees to employ and does hereby employ Maxim, and Maxim agrees to serve the Corporation during the term of this agreement as consulting engineer and adviser relating to munitions of war, but it is specifically agreed and understood that Maxim shall not be obliged to reside permanently in America and shall not be required to devote his entire time and attention to the work, but only such

time and attention as may be necessary to give counsel and advice to the officers of the Corporation concerning the same.

2. Maxim agrees to apply for and to use his best endeavors to obtain at the request and expense of the Corporation letters patent in the United States of America and in such other countries as the Corporation may elect on any and all inventions which he may make during the continuance of this agreement relating to war munitions, with the following exceptions, viz: fuses and explosive compounds and explosive materials, high explosives and gunpowder, ingredients entering into their composition, and all processes and apparatus of every name and nature for their manufacture.

3. Maxim further agrees to grant and does hereby grant to the Corporation the exclusive right and license to use during the term of this agreement together with power to grant sublicenses to use during said term, but subject to the conditions of this agreement, the said inventions mentioned in a schedule annexed hereto, and all inventions which he may make during the continuance of this agreement relating to war munitions, with the exceptions recited in Clause 2 hereof.

4. The Corporation shall during the continuance of this agreement pay the cost of making and protecting all applications for patents in the United States of America and elsewhere which it shall elect to have Maxim apply for and prosecute, and it shall pay all costs and expenses of keeping all such patents in force in the United States of America and elsewhere.

5. Maxim shall have the option and right to choose his own patent attorneys for the execu-

tion of said patent work, but the said Corporation may have its own attorney consult with said patent attorneys in reference to said patent work.

6. Upon the submission by the said Maxim to the Corporation of any such invention the Corporation shall notify Maxim within thirty days in writing after such submission as to whether or not it desires to have said applications made and patents taken out, and if it does so desire, in what countries it wants such patents to be taken out, and in the absence of such notification the Corporation waives all right to any such invention and in and to the patents that may be obtained thereon.

7. Maxim hereby reserves the right to apply for and to patent in any and all countries at his own expense for his own use and behoof and the use of his legal representatives and assigns, any and all inventions which he may invent relating to the manufacture of war munitions, and to the production of war munitions, which the Corporation may not elect to have applied for and patented at its own expense, as herein provided. If the Corporation shall elect to have certain of said inventions patented in certain countries and not in others, the said Maxim may likewise at his own expense and for his own use and behoof, and the use of his legal representatives and assigns, take out patents thereon in any and all other countries.

8. The Corporation shall pay Maxim during the period of five years from the delivery of this contract for his services as consulting engineer and adviser, as herein specified, the sum of Twenty-five thousand dollars ($25,000) a year payable in equal monthly instalments of

Exhibit P. 9.

Two thousand and eighty-three and thirty-three one hundredths Dollars ($2,083.33) per month at the end of each and every month; and for the following period of five years the sum of Twelve thousand five hundred dollars ($12,500) a year in equal monthly instalments of One thousand forty-one and 66/100 Dollars ($1,041.66) each payable at the end of each and every month; and thereafter, so long as the Corporation or its assigns, shall own or employ any of Maxim's said inventions or shall retain or its licensees shall retain licenses for the same, the sum of Twelve thousand five hundred dollars ($12,500) a year payable in monthly instalments of One thousand forty-one and 66/100 Dollars ($1,041.66) each payable at the end of each and every month.

9. The Corporation shall, as a further consideration for these presents, pay to Maxim out of the first Fifteen Million Dollars ($15,000,000) of orders that it may receive for the sale of property in which it deals from General Hermonius, Colonel S. Khatunzeff, Ivan Narodny, Harold Roberts, or the Importers & Exporters Trading Corporation, Duke Pugliatti, Comte du Tar, Commander Pfister, N. C. Adossides, or from parties whom they represent, or who may represent them, from the funds of the Corporation five percent (5%) of the total amount of the purchase price of said property from time to time as said contracts are made and payments under them received by the Corporation, and until said Maxim shall have received the full amount of five percent (5%) on Fifteen Million Dollars ($15,000,000).

10. After Maxim shall have received the sum of One Hundred Thousand Dollars ($100,000)

under this contract, he will, at the option of the corporation, assign to the corporation the title to the present and future patents and inventions covered by this contract.

11. In the event from any cause of the Corporation being unable to pay or failing to pay Maxim the said monthly payments or any other of the said payments for a period of three months, then upon the written demand of Maxim, the Corporation shall reassign to him any patents or inventions theretofore assigned to the Corporation, and all licenses which shall have been granted by this agreement to the Corporation shall immediately cease and determine and the Corporation shall forthwith at its own expense assign, transfer and set over to Maxim all its right, title and interest in and to the same and in and to any and all licenses for the use of the said inventions which the Corporation shall have granted, and all such licenses granted by the Corporation shall specifically provide that they are subject to this and all other provisions of this contract.

12. The Corporation shall reimburse Maxim for all money expended by him for hotel bills, traveling expenses and other expenses which shall or may be incurred by him in connection with his services to the Corporation made at the request of the Corporation.

13. The Corporation shall have the right at its own expense, and Maxim shall have the right at his expense, to sue and prosecute and recover from infringers of the said inventions and patents. But neither Maxim nor the corporation by these presents agrees to prosecute infringers.

14. The Corporation will not, while the said Maxim is connected with it, either as an officer

Exhibit P. 9.

or consulting engineer, enter into the manufacture of or deal in any of the matters or things mentioned in the exception embodied in Clause 2 of this contract.

15. It is mutually covenanted and agreed that all the provisions of this contract shall bind and inure to the benefit of the heirs, executors, administrators and assigns of the said Maxim, and to the successors and assigns of the said Corporation.

In Witness Whereof, this contract has been executed in duplicate the day and year first above written.

HUDSON MAXIM (L. S.)

THE MAXIM MUNITIONS
CORPORATION,

by Wm. A. Scully
President

[CORPORATE SEAL]

Attest:

B. F. Taylor
Secretary

Exhibit P. 9.

SCHEDULE "A"

Applications for United States Patent

Improvements in Periscopes Serial No. 871,883
Filed Nov. 13, 1914

Improvements in Position Indicators or Recorders Serial No. 877,328
Filed Dec. 15, 1914

Improvements in Range Finding Position Indicator Combined with Periscope
Serial No. 3489 of 1915
Filed Jan. 21, 1915

Improvements in Position Indicators or Recorders Serial No. 879,466
Filed Dec. 29, 1914

UNITED STATES PATENT

Combined multi-barrel Gun and Range-finder No. 1,031,279
Patented July 2, 1912
HUDSON MAXIM.

EXHIBIT P. 10.

THIS AGREEMENT made and entered into this 22nd day of September, 1915, by and between HUDSON MAXIM, hereinafter referred to as Maxim, Party of the First Part, and the MAXIM MUNITIONS CORPORATION, a Delaware corporation, hereinafter referred to as the Corporation, Party of the Second Part,

WITNESSETH:

WHEREAS, heretofore a certain contract under date of September 9th, 1915, was entered into between the parties hereto and was put in escrow with other documents and securities to be delivered upon the happening of certain events; and

WHEREAS, the parties to said escrow agreement have agreed that said contract shall be delivered contemporaneously herewith; and

WHEREAS, it is the desire of the parties hereto to modify the terms of said contract of September 9th, 1915, in certain regards:

NOW, THEREFORE, in consideration of the premises and of other valuable considerations, the receipt whereof by each party from the other is hereby acknowledged, it is agreed:

First: The corporation shall not be under obligation to begin the payments mentioned in Paragraph Eighth of said contract of September 9th, 1915, to said Maxim until such time as the corporation shall have accepted contracts or orders to the extent of Three Million Dollars ($3,000,000) in some one period of twelve months, but thereupon said payments shall begin. Prior thereto said Maxim shall be paid the sum of Five Hundred Dollars ($500) a month beginning at the date that said corporation accepts

Exhibit P. 10.

its first order or contract for the furnishing of war munitions or other property, and payments at the rate of Five Hundred Dollars ($500) a month shall be made to said Maxim until such time as said contracts or orders shall amount to Three Million Dollars ($3,000,000).

Second: Instead of the amounts mentioned in Paragraph Ninth of said contract of September 9th, 1915, said Maxim shall be paid the sum of four and one-third percent (4 1-3%) upon the total amount of the purchase price under the first orders or contracts for the sale of any property in which the corporation deals until said Maxim shall have received four and one-third percent (4 1-3%) upon the full sum of Fifteen Million Dollars ($15,000,000) regardless of the sources from or through which the said corporation accepts said contracts or orders, the said amount to be paid said Maxim only in case there is an average profit to the corporation to the extent of at least Five Hundred Dollars ($500) in every Seventeen Hundred Dollars ($1700) of the price paid under the aggregate total of said orders or contracts. In case there is a lesser profit then and in that event said Maxim shall receive four and one-third percent (4 1-3%) upon the profits from the first fifteen million dollars ($15,000,000) in amount of said orders and contracts. By profit as used in this clause of this contract, is meant profit over and above cost of material and shop labor, excluding general overhead and selling expenses.

Third: If the corporation accepts no contracts or orders within seven (7) months from the date hereof said Maxim shall at that time only be at liberty to cancel this contract together with the contract of September 9th, 1915,

Exhibit P. 10.

if he so desires, by written notice of such election, delivered to the Secretary of the Company, accompanied by the return to Robert Sweeny of the ninety-three thousand nine hundred and ninety-six (93,996) shares of stock issued to Hudson Maxim as set forth in the letter of escrow dated September 9th, 1915, addressed to Honorable Alton B. Parker.

Fourth: Said Maxim agrees not to engage directly or indirectly in any business relating to machine guns or guns except for said corporation,—but nothing herein shall prevent said Maxim from rendering direct service to the United States on any Government board.

Fifth: Said contract of September 9th, 1915, is to remain in full force and effect except as herein provided.

In Witness Whereof, this contract has been executed in duplicate the day and year first above written.

HUDSON MAXIM (L. S.)

MAXIM MUNITIONS CORPORATION,
by Edward Beckert,
1st V P & G. Manager

[CORPORATE SEAL]

Attest:

B. F. Taylor
Secretary

Exhibit P. 11.

EXHIBIT P. 11.

Meeting of the Executive Committee of Board of Directors of Maxim Munitions Corporation, held at the office of the Company, #52 Broadway, September 9th, 1915, at 11.30 A. M., pursuant to written waiver:—

All the members of the Executive Committee being present, Mr. Beckert called the meeting to order and Mr. Taylor, the Secretary of the Company recorded. Secretary presented the waiver of notice of call of this meeting, signed by all the members of the Committee. The same was ordered spread upon the minutes.

[Waiver of Notice]

There was presented to the meeting a proposed contract between the corporation and Hudson Maxim in reference to procuring the services of said Maxim as Consulting Engineer and otherwise and licenses to certain patents in said contract mentioned, all as set forth in said contract, and after discussion, upon motion duly made and seconded, it was unanimously

Resolved: That said contract be executed and delivered as and for the act and deed of this corporation.

There was also presented to the meeting a form of bond to be executed by this corporation, as principal, and Robert Sweeny, as surety, to said Maxim, to the extent of One hundred thousand dollars ($100,000) to secure to said extent the performance of said contract with Maxim.

Exhibit P. 11.

Upon motion duly made and seconded, it was unanimously

RESOLVED: That said bond be executed and delivered as and for the act and deed of this corporation.

It was stated to the meeting that the contract with Hudson Maxim and the bond to be given said Hudson Maxim in reference to said contract are not to be delivered until this corporation procures a contract for war munitions or other articles to the extent of Three million dollars ($3,000,000),

WHEREUPON, upon motion duly made and seconded, it was unanimously

RESOLVED: That the said proposed contract of this date, after it shall have been executed by this corporation and by said Maxim, and the said bond, after it shall have been executed by this corporation and said Sweeny, shall, together with other considerations going to the said Maxim, be deposited with Honorable Alton B. Parker to be held by him for delivery upon the fulfillment of said conditions, all in accordance with a certain letter presented to the meeting to be signed by said Hudson Maxim, Robert Sweeny and this corporation, and it is further

RESOLVED: That the proper officers of this corporation be and they hereby are authorized and directed to sign said letter and deposit said contract and said bond with said Parker.

There being no further business coming before the meeting, it was—a motion duly carried—adjourned.

B. F. TAYLOR,
Secretary.

EXHIBIT P. 12.

Meeting of the Executive Committee of Board of Directors of Maxim Munitions Corporation, held at the office of the Company, 52 Broadway, September 30th, 1915, at 11:30 a. m., pursuant to written waiver:

All the members of the Executive Committee being present, Mr. Beckert called the meeting to order and Mr. Taylor, the Secretary of the Company, recorded. Secretary presented the waiver of notice of call of this meeting, signed by all the members of the Committee. The same was ordered spread upon the minutes.

[Waiver of Notice]

There was presented to the meeting an agreement made September 22nd, 1915, between Hudson Maxim and the Maxim Munitions Corporation regarding the license by Maxim to the Corporation of the use of a certain Maxim automatic gun, Model 1904, #42, which, upon motion duly made, seconded and carried, was ratified and declared the deed and act of the Corporation.

The Secretary presented to the meeting an agreement dated September 22nd, 1915, between the Corporation and Hudson Maxim, executed on behalf of the Corporation by First Vice President and Secretary, which agreement modifies the agreement of September 9th between the Corporation and Hudson Maxim, and provides for the compensation to Mr. Maxim for his services to the Company and the transfer of his licenses and patents.

Exhibit P. 12.

After extended discussion and on motion duly made and seconded, the following resolution was adopted:

RESOLVED: That the contract of September 9th, 1915, and a modification of the contract, dated September 22nd, 1915, between this Corporation and Hudson Maxim be, and the same hereby is ratified, approved and confirmed, and

BE IT FURTHER RESOLVED: That the action of the officers of this company in executing be, and the same is hereby ratified and confirmed and declared to be the act and deed of this Corporation. On motion duly made, seconded and carried, the following resolution was adopted, Mr. Sweeny not voting:

WHEREAS, Robert Sweeny has heretofore advanced sums of money to the Corporation to be used for its corporate purposes.

NOW THEREFORE BE IT RESOLVED: That all advances heretofore made or to be made by Robert Sweeny to the Corporation, be placed to the credit of Robert Sweeny on the books of the Company and to be repaid to him as and when funds are received for the credit of the Corporation.

There being no further business coming before the meeting it was, on motion duly carried, adjourned.

B. F. TAYLOR SECRETARY

Exhibit P. 13.

EXHIBIT P. 13.

SPECIAL MEETING OF THE BOARD OF DIRECTORS OF MAXIM MUNITIONS CORPORATION

Pursuant to call of the President and upon written notice served by the Secretary upon each member of the Board, pursuant to the by-laws and upon written waiver of notice and consent to the meeting signed by each member, a special meeting of the Board of Directors of MAXIM MUNITIONS CORPORATION was held at the office of the Company, #120 Broadway, New York City, this tenth day of December, 1915, at three o'clock p. m.

All of the Directors were present except Mr. J. H. Brown.

The President, Mr. Hudson Maxim, presided and the Assistant Secretary, Benjamin F. Taylor kept the record of the meeting.

The Assistant Secretary presented to the meeting a copy of written notice thereof signed by him, of which one copy was addressed to and served upon each of the Directors more than two days before the meeting, and also presented a written waiver of notice signed by all the Directors of the Corporation, * * *.

* * * * *

The minutes of the proceedings of the first meeting of the incorporators of the MAXIM MUNITIONS CORPORATION, held on the 25th day of August, 1915, including By-Laws of the Corporation adopted at said meeting; the first meeting of the Board of Directors held on the 25th day of August, 1915; the meeting of the Board of Directors held on the 4th day of Sep-

Exhibit P. 13.

tember 1915; the meeting of the Executive Committee held on the 9th day of September, 1915; the second meeting of the Executive Committee held on the 9th day of September, 1915; the meeting of the Executive Committee held on the 29th day of September, 1915; the meeting of the Executive Committee held on the 30th day of September, 1915; the meeting of the Executive Committee held on the 22nd day of October, 1915; the meeting of the Executive Committee held on the 29th day of October, 1915; the meeting of the Executive Committee held on the 8th day of November, 1915; the meeting of the Board of Directors held on the 12th day of November, 1915, and the meeting of the Executive Committee held 8th day of December, 1915, were read at length and on motion duly make and seconded, it was unanimously—

VOTED, that the said minutes and all of them be and the same are hereby approved, ratified and confirmed, and that the proceedings of the Board of Directors and of the Executive Committee transacted at said meetings, and all of them, as recorded herein, be and the same are hereby ratified and confirmed and declared to be the acts of this Corporation.

And the meeting adjourned.

B. F. TAYLOR
Assistant Secretary

Exhibit P. 14.

EXHIBIT P. 14.

No. 1228827

THE UNITED STATES OF AMERICA

To All to Whom These Presents Shall Come:

WHEREAS OLIVER BERRY SAALFIELD,
of
West Hoboken, New Jersey,

has presented to the COMMISSIONER OF PATENTS a petition praying for the grant of Letters Patent for an alleged new and useful improvement in

RECOIL-OPERATED FIREARMS,

He having assigned his right, title, and interest in said improvement to Maxim Munitions Corporation, of New York, N. Y., a corporation of Delaware,

a description of which invention is contained in the specification of which a copy is hereunto annexed and made a part hereof, and has complied with the various requirements of LAW in such cases made and provided, and

WHEREAS upon due examination made the said Claimant is adjudged to be justly entitled to a patent under the LAW.

Now Therefore these LETTERS PATENT are to grant unto the said Maxim Munitions Corporation, its successors or assigns for the term of SEVENTEEN years from the fifth day of June, one thousand nine hundred and seventeen, the exclusive right to make, use and vend the said invention throughout the United States and the Territories thereof.

Exhibit P. 14.

IN TESTIMONY WHEREOF, I have hereunto set my hand and caused the (SEAL) seal of the PATENT OFFICE to be affixed at the City of Washington this fifth day of June, in the year of our Lord one thousand nine hundred and seventeen, and of the Independence of the United States of America the one hundred and forty-first.

F. W. H. CLAY
Acting Commissioner of Patents.

O. B. SAALFIELD.

RECOIL OPERATED FIREARM.

APPLICATION FILED AUG. 8, 1916.

1,228,827.

Patented June 5, 1917.

2 SHEETS—SHEET 2.

FIG. 4.

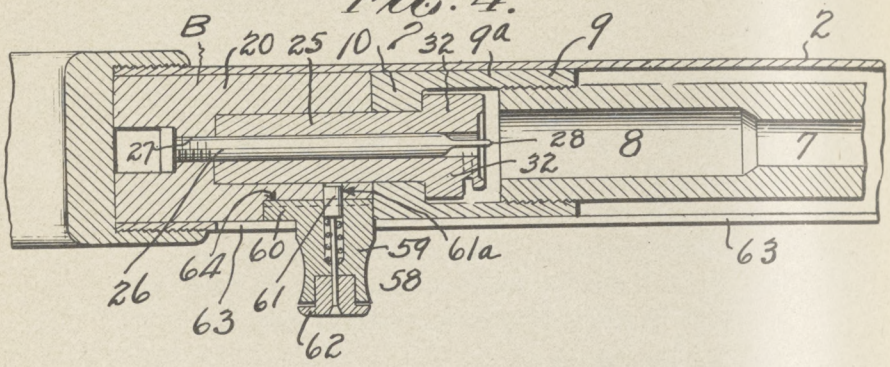

FIG. 5.

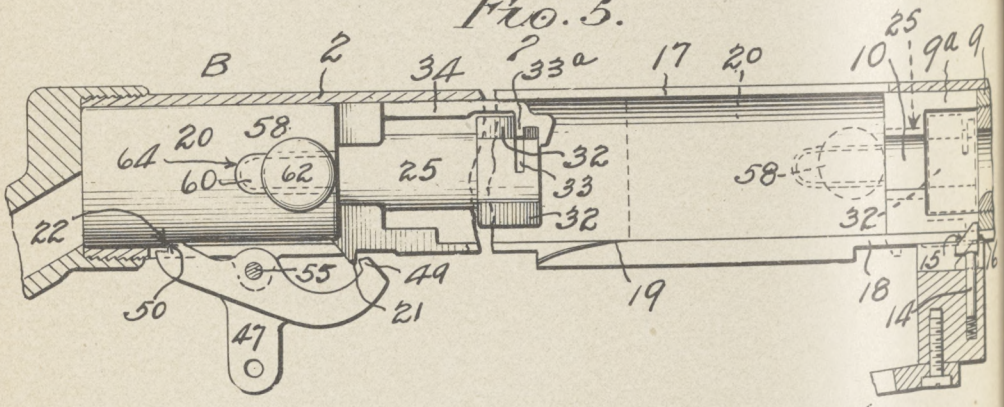

FIG. 8.

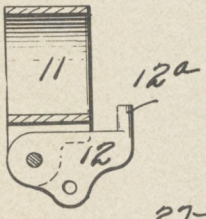

FIG. 6.

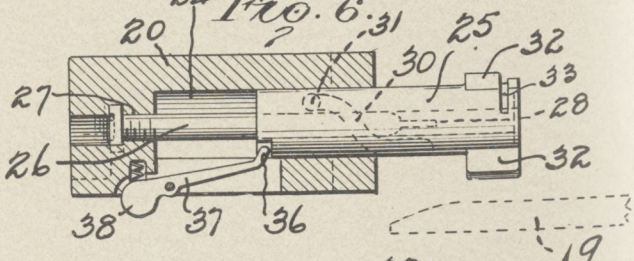

FIG. 9.

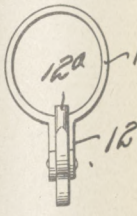

FIG. 7.



Inventor

OLIVER B. SAALFIELD

BY

Robert B. Brown

Attorney

O. B. SAALFIELD.

RECOIL OPERATED FIREARM.

APPLICATION FILED AUG. 8, 1916.

1,228,827.

Patented June 5, 1917.

2 SHEETS—SHEET 1.

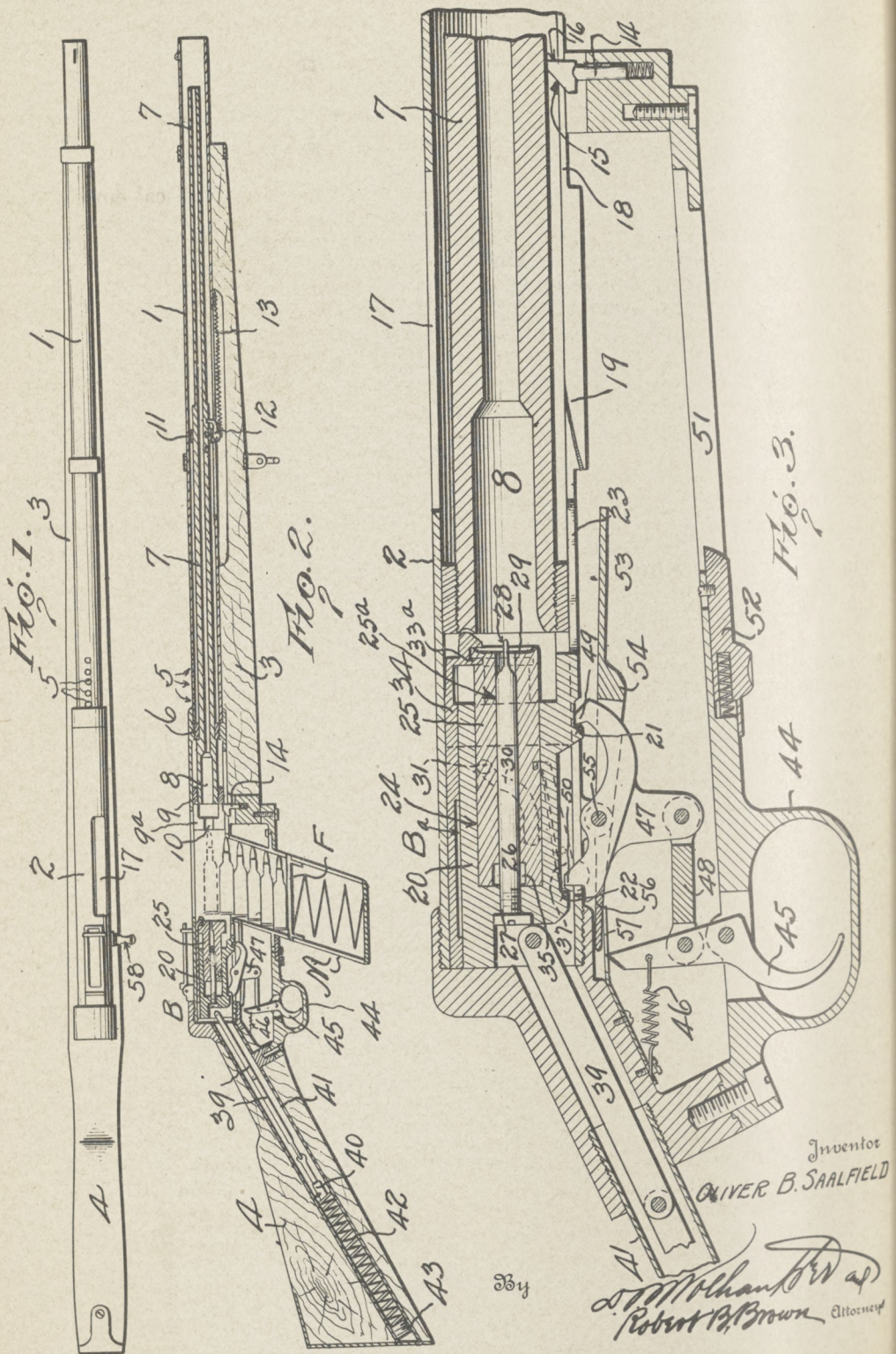

UNITED STATES PATENT OFFICE.

OLIVER BERRY SAALFIELD, OF WEST HOBOKEN, NEW JERSEY, ASSIGNOR TO MAXIM MUNITIONS CORPORATION, OF NEW YORK, N. Y., A CORPORATION OF DELAWARE.

RECOIL-OPERATED FIREARM.

1,228,827. Specification of Letters Patent. **Patented June 5, 1917.**

Application filed August 8, 1916. Serial No. 113,808.

To all whom it may concern:

Be it known that I, OLIVER BERRY SAALFIELD, a citizen of the United States, residing at West Hoboken, in the county of Hudson and State of New Jersey, have invented certain new and useful Improvements in Recoil-Operated Firearms, of which the following is a specification.

This invention relates to magazine firearms, and more especially to a novel improvement in automatic shoulder rifles of the recoil-operated type.

Primarily the invention contemplates a rifle of this character having a minimum amount of recoil, and capable of being fired rapidly from the shoulder without unduly deranging the aim of the firer. That is to say, the invention has in view a rifle employing novel instrumentalities which not only absorb the impact of the recoil to a certain extent, thereby enabling the firer to hold the gun steady, but which also utilize the recoil to readjust the mechanism to recock the gun for firing the next shot, and to automatically eject the fired cartridge.

Another object of the invention is to provide a novel construction and arrangement for feeding the cartridges from the magazine into the firing chamber of the gun barrel by means of a spring-actuated breech assembly, which is so arranged with relation to the breech end of the gun barrel, that in its forward movement to position the cartridge therein, it automatically becomes locked with the barrel and detonates the cartridge, and at the same time unlocks the barrel so that the latter will be free to be acted upon by the recoil.

A further object of the invention is to provide a gun that will remain reasonably cool during rapid fire, and with this end in view, the invention proposes to provide a novel and practical cooling means to keep the temperature of the gun barrel within reasonable limits.

With the above and other objects in view which will more readily appear as the nature of the invention is better understood, the same consists in the novel construction, combination and arrangement of parts hereinafter more fully described, illustrated and claimed.

A preferred and practical embodiment of the invention is illustrated in the accompanying drawings, in which—

Figure 1 is a top plan view of the improved firearm.

Fig. 2 is a vertical sectional view thereof with the mechanism cocked.

Fig. 3 is an enlarged detail sectional view of the breech end of the gun showing the relative position of the several parts thereof when the recoil of the barrel has pushed the breech-bolt to its extreme backward position for engagement with the trigger mechanism.

Fig. 4 is an enlarged horizontal sectional view showing the relative positions of the several parts shown in Fig. 3.

Fig. 5 is an enlarged vertical sectional view showing the breech-bolt in cocked position in full lines and the normal position of the barrel also in full lines, the dotted lines indicating the bolt interlocked with the barrel when the cartridge is detonated.

Fig. 6 is an enlarged detail sectional view of the breech-bolt carrier showing more clearly the breech-bolt, and how the same is locked in extended position when the gun parts are in normal position.

Fig. 7 is a detail plan view of the breech-bolt.

Fig. 8 is an enlarged detail view partly in section of the spring attaching clip used in connection with the barrel-returning spring.

Fig. 9 is an end elevation of the clip shown in Fig. 8.

Similar reference characters designate corresponding parts throughout the several figures of the drawings.

As previously indicated, the present invention has in view a recoil operated gun, wherein the breech-bolt and the gun barrel are normally spaced apart, so that a cartridge from the magazine will normally lie in the feeding zone between these two elements. Upon the release of the spring-actuated breech-bolt, the same moves forward toward the relatively fixed gun barrel to place the cartridge therein and in its forward flight, the breech bolt is caused to become interlocked with the gun barrel substantially simultaneously with the unlocking of the latter from its relative fixed po-

sition and the detonation of the cartridge, whereupon the recoil from the explosion will cause both barrel and breech-bolt to move backward to again recock the gun. After the interlocked parts have reached their backward limit of movement, the breech-bolt is held in place by the sear of the trigger device, and the barrel moves forward to its relatively fixed firing position to thus eject the fired cartridge and to be reset and relocked in firing position.

Accordingly, in carrying out the invention, it is proposed to employ a gun casing 1 having at one end thereof a breech casing 2, which are respectively mounted in the conventional manner on the forearm 3 and stock piece 4. The casing 1 is of relatively large diameter and may be provided adjacent its breech end with a plurality of air intake openings 5, and an interior abutment and guide collar 6 against which the gun barrel 7 arranged within the casing may strike to limit its forward movement. The said gun barrel 7 is thus mounted to have a free sliding movement in the casing 1 through the guide 6, and has a relatively large air space or cooling jacket between the outer surface thereof and the interior of the casing to provide an air cooling chamber.

With further reference to the gun barrel 7, it will be observed that the muzzle end thereof terminates short of the mouth of the gun casing 1, so that when a cartridge is fired, the products of the explosion issuing from the muzzle of the barrel will create a partial vacuum thereat and thus draw in cool air through the ports 5 and cool the gun barrel. The breech end of the gun barrel 7 is provided with a firing chamber 8 and a keeper yoke 9 fitted to the end of the barrel and having the opposite rearwardly projecting yoke-arms 9^a provided with the inturned holding lugs 10. At an intermediate point, the barrel has adjustably fitted thereon an attaching clip 11 having a pivotally mounted arm 12 to which is connected one end of a barrel retracting spring 13, the other end of which is made fast to the forearm 3. As will be apparent from Figs. 2, 8, and 9 of the drawings, the arm 12 of the clip is provided with an upstanding lug 12^a for engaging with a radial hole in the barrel, to maintain the correct relative position of the clip to the fixed point of the spring.

The upper part of the breech casing 2 forms a continuation of the gun casing 1, while the lower part thereof constitutes a framework for supporting the magazine and trigger mechanism. The portion of the breech casing adjacent the forearm 3 is provided with a spring-pressed detent 14, which has one face beveled as at 15 as clearly shown in Figs. 2 and 3 of the drawings, whereby cartridges from the magazine may be assisted into the firing chamber 8 of the gun, while the flat side 16 of the head of the detent engages with the end of the barrel to hold the same in its relatively fixed firing position.

The portion of the breech-casing in which the breech mechanism B slides is also provided at its top side with a cartridge ejecting opening 17 arranged to one side of the central longitudinal axis of the casing to direct the empty shell away from the face of the firer. At its underside, the said breech-casing is provided with a relatively large slot or freeway 18 in which a portion of the breech bolt travels. One edge of this slot 18 is provided with a longitudinal fixed cam 19 for engaging with the device which holds the breech-bolt in locked position, to thereby release the same in the forward flight of the breech-bolt whereby the bolt and gun barrel may become interlocked as will hereinafter more fully appear.

Referring now to the breech-bolt device B, it will be observed that the same includes a bolt carrier and breech-bolt fitted thereto. The breech-bolt carrier 20 is of substantially cylindrical formation and is provided at its lower side with a check shoulder 21 and a cocking shoulder 22 adapted to be engaged by the sear of the trigger mechanism as will presently appear. The body of the bolt carrier is also provided with a forwardly extending detent engaging fork 23 clearly shown in Fig. 2, and which travels in the slot 18 so that in the forward movement of the carrier 20, the same depresses the head of the detent 14 to thus unlock, at the proper time, the barrel 7 from its relatively fixed firing position.

The bolt carrier 20 is formed with a central bore or socket portion 24 which slidably accommodates the breech or cartridge positioning bolt 25. This bolt is formed with a central longitudinal guiding bore 25^a in which slidably works the firing pin 26 secured at one end as at 27 to the bolt carrier, and provided with the cap detonating point 28 at its other end, which latter may project into the recessed cartridge seat 29 of the firing bolt as clearly shown in Figs. 3 and 4.

The firing bolt 25 is provided on its periphery with a spiral slot 30, which receives a pin 31 inserted radially through the body of the bolt carrier, so that the movement of the bolt may be both rectilinear and rotary. The forward end of the bolt 25 is provided with the oppositely located locking projections 32 for engaging with the holding lugs 10 of the keeper yoke 9 when the breech-bolt moves forward to position the cartridge in the firing chamber of the barrel. One of the projections 32 may be provided with a circumferential groove 33 clearly shown in Figs. 5, 6, and 7 of the drawings for engaging with the holding and guiding rib 33^a of a suitable bolt steadying element 34 which is

slidably mounted in a groove *a* in the upper portion of the bolt carrier 20. The rear end of the firing bolt 25 is provided with a transverse recess 35 which receives the locking end 36 of a spring pressed locking pawl 37 pivotally mounted between its ends in the bolt carrier 20 as clearly shown in Fig. 6 of the drawings. This locking pawl is provided with an enlarged normally exposed terminal contact head 38 at one end for engaging with the cam 19 of the breech casing in the forward movement of the breech bolt carrier so that the breech or firing bolt 25 becomes unlocked.

In this connection, it may be noted that in its normal position, that is, the position the bolt assumes when the gun is cocked, the firing bolt is extended, as shown in Figs. 2, 5, and 6 of the drawings. When the bolt is thus extended, or in other words, projects considerably forward from the end of the carrier, the locking end 36 of the detent 37 is in engagement with the transverse locking recess 35. The purpose of having the cartridge positioning bolt 25 locked is to displace the cartridge from the cartridge zone into the firing chamber of the barrel, and the initial movement of the bolt carrier, in its forward flight, displaces the cartridge from its position at the top of the cartridge compartment into practically its full position in the firing chamber. At the instant the cartridge is pushed into the firing chamber, the portion 38 of the detent 37 engages the cam 19 and thus releases the end 36 of the detent from the recess 35 to permit the rotation of the bolt 25 due to the provision of the recess and pin 30—31. Thus, when the cartridge is placed in the cartridge chamber, the cartridge positioning breech bolt rotates and the projections 32 thereof become engaged behind the holding lugs 10 of the yoke on the gun barrel.

When the bolt 25 becomes released from its lock 37, the bolt carrier is free to follow up the path of the breech bolt, to thereby push the firing pin through the bolt and detonate the cartridge held locked in the firing chamber by the breech-bolt which has become turned as above indicated. Then the recoil from the explosion of the cartridge causes the locked barrel and breech mechanism to move rearwardly together. This action becomes possible because the barrel has previously been unlocked by the engagement of the fork 23 with the detent 14, and causes the engagement of the breech-bolt with the trigger mechanism as will more fully appear.

With further reference to the breech mechanism B, it will be observed that the same also includes a hinged or jointed bolt pusher consisting of suitable toggle links 39 which connect with the bolt carrier 20 and with a spring pressed plunger 40 that rides in a spring guide 41 in the stock 4 of the gun. This plunger 40 is engaged by a relatively stout coil spring 42 constituting the main spring of the gun and the compression of which may be adjusted by means of a suitable nut 43 in the butt of the stock. It is this spring that absorbs the shock of the recoil upon the firing of the gun, and also actuates the breech bolt upon the release thereof by the trigger mechanism which will now be referred to in detail.

As will be observed from the drawings, the lower portion of the breech casing 2 is provided with a trigger guard 44 which has pivoted therein a trigger 45 that is placed under the tension of the coiled sear spring 46 clearly shown in Fig. 3 of the drawings. This trigger 45 is connected with the sear element 47 by a link 48, and as the trigger 45 is under the tension of the spring 46, it will be apparent that upon rearward finger pressure on the trigger 45, the link 48 between the trigger and sear will be pushed forward. The sear 47 is of substantially T-shaped formation, the shank portion thereof being pivotally connected with the link 48, while the head thereof is formed at its front end with a hook 49 for temporarily checking a bolt carrier, and the heel portion thereof is provided with a rearwardly placing shoulder 50 for engaging with the cocking shoulder 22 of the bolt carrier.

When the gun is fired, the force of the recoil will carry the locked barrel and breech mechanism backward through to the limit of the breech casing very rapidly, ordinarily before the firer can remove his finger from the trigger. Thus, owing to the hook and shoulder formation of the sear, the check shoulder 21 of the bolt carrier is first engaged with the hook 49 of the sear while the trigger is in retracted condition, that is, before the operator removes his finger therefrom after firing a shot. However, upon removing finger pressure from the trigger, the spring 46 pulls the arm 47 rearwardly and pushes the shoulder 50 up into the path of the cocking shoulder 22 and pulls the hook 49 out of the path of the shoulder 21. With this construction of sear, a double engagement of the breech mechanism is insured, so that there is no possibility of the bolt carrier moving forward under the pressure of the spring 42 after it has been driven back to its normal position by the force of the recoil.

The cartridge magazine M may be inserted in the lower portion or framework of the breech casing 2 in the slot 51, where it is held in place by a suitable spring-pressed latch element 52 to properly feed the cartridges into the feed zone between the breech mechanism and the firing chamber of the gun barrel. The magazine is so constructed as to receive the free end portion 53

of a trigger stop lever 54 which is pivotally mounted on the sear axis 55 and has the rear end 56 pressed upward by a spring 57. This spring 57 holds the end 56 of the trigger guard normally clear of the upper end of the trigger 45 so that the latter will always be operative as long as the magazine contains more than one cartridge. However, when the last cartridge is in the feed zone, between the breech mechanism and the barrel, the magazine follower F engages the end 53 of the trigger stop-lever and pushes the same upward, thus pushing the end 56 down against the tension of the flat spring 57 into the path of the upper end of the trigger 45 so that the same cannot be moved a sufficient distance to operate the sear and thus release the breech mechanism. This construction provides for announcing that the magazine needs refilling and also locks the breech mechanism in cocked position to facilitate the placing of a full magazine in the gun.

Fig. 2 of the drawings shows the position of parts when the gun is cocked or ready for firing. As will be observed from this figure, the breech mechanism B, including the breech bolt 25 and bolt carrier 20, are held at the extreme rear end of the breech casing 2, by means of the sear 27 of the trigger mechanism against the tension of the spring 42. The barrel 1 is locked between the guide and abutment member 6 and the spring-pressed detent 14, and a cartridge from the magazine M occupies the feeding zone between the breech mechanism and the firing chamber of the relatively fixed gun barrel 7. Upon pulling the trigger 45 against the tension of the spring 46, the sear 47 is rocked on its axis 55, so that the hook 50 is released from engagement with the shoulder 22 on the breech bolt carrier. This latter element, as previously described in the normal condition of the apparatus, has the cartridge positioning breech bolt 25 locked in an extended position as shown in Figs. 2, 5, and 6. Thus, when the shoulder 50 disengages the shoulder 22, the entire breech mechanism is rapidly thrust forward by the main spring 42 with the breech bolt in extended position to thereby sweep a cartridge from the feed zone into the firing chamber 8 of the barrel 7.

In the forward flight of the breech mechanism, up to a point where the cartridge is finally seated in the cartridge chamber 8 of the gun barrel, the bolt 25 remains locked by the pawl 37 in its extended position. However, at the instant the cartridge is finally seated, or perhaps a fractional period in advance thereof, the head 38 of the pawl 37 engages the cam 19 to unlock the bolt 25 and permit the same to rotate due to the provision of the spiral slot 30 and pin 31. This rotation of the bolt 25 brings the locking projections 32 into interlocking engagement with the holding lugs 10 of the yoke 9 secured to the rear end of the barrel 7, and as soon as the projections 32 are fully behind the lugs 10 by a quarter turn of the bolt, the bolt carrier having the firing pin 26 rigid therewith, continues to advance and compel the end 28 of the firing pin to detonate the cap of the cartridge. In this connection, it will be noted that the slot 30 is provided with a substantially straight portion at its forward end, so that after a quarter turn has been given to the bolt 25 by the pin 31 riding in the curved part of the slot, the final movement of the bolt carrier is in a substantially straight line to thereby thrust the firing pin through the bolt to detonate the cartridge cap.

Simultaneously with the detonation of the cartridge, the fork 23 depresses the detent 14 and unlocks the barrel 7, so that the recoil will drive the breech mechanism backward against the absorbing tension of the main spring 42. At this time, as previously indicated, the firer not having removed his finger from the trigger, the carrier 20 will be engaged and checked by the hook 49 of the sear, but as soon as finger pressure is released from the trigger, the shoulder 50 of the sear will engage with the cocking shoulder 22 of the bolt carrier. When the recoil takes place, it will be clear that both the barrel and breech mechanism, being interlocked by the lugs 10 and projections 32, the bolt 25 will remain fully housed within the socket 24 as shown in Fig. 3. That is to say, since the recoil forces both the barrel and breech bolt to the rear of the casing in a locked condition, it will be clear that the locking projections on the breech bolt 25 will be in a horizontal position and engaged behind the inturned holding lugs 10. However, as soon as the sear preliminarily engages the bolt carrier at 21, the barrel will be pulled forward by means of the barrel retracting spring 13, whereupon the barrel automatically becomes disengaged from the bolt by the turning of the latter due to the provision of the slot 30 and pin 31. When the barrel 7 starts its forward return movement, the end 36 of the pawl 37 rests idly on the surface of the bolt 25. Therefore, the bolt is free to rotate a quarter turn when pulled by the barrel to bring the projections 32 from their horizontal position behind the lugs 10 to a vertical position to clear the same, and thereby permit the barrel to return unhindered to its position behind the lug 14, and at the same time pulling the bolt 25 out of the socket 24 in the carrier to the position as shown in Figs. 2, 5, and 6.

It will, of course, be apparent that when both the barrel and bolt carrier are thrust back by the recoil, the pawl 37 is removed from the surface of the cam 19, and then

the locking end 36 thereof rides on the periphery of the bolt 25 as above indicated until the bolt is pulled to its outward limit from the socket 24, at which time the said end 36 will engage with the transverse recess 35 and again hold the bolt locked in its extended position.

The forward movement of the barrel permits the ejection of the fired cartridge through the opening 17 in the top of the breech casing and permits a fresh cartridge to come into the feed zone, and when the barrel has reached its forward limit under the influence of the spring 13, it again becomes engaged behind the detent 14, and thereby assumes a relatively locked position.

A further novel feature of the invention resides in the provision of a detachable breech-bolt knob designated generally as 58. This knob essentially comprises a body 59 having a bolt carrier engaging foot portion 60 which is substantially of T-shape in cross section, and a spring-pressed locking lug 61 which is controlled through an exposed finger button 62. This knob may be inserted in a longitudinal slot 63 in the side of the breech casing 2 as shown in Fig. 4 of the drawings and then inserted in the T socket 64 of the bolt carrier 20 whereby the lug 61 will snap into the locking hole 61^a and hold the knob locked to the carrier. When the knob is thus held to the carrier it is guarded in the slot 63 to compel the breech bolt to move in a rectilinear path in the breech casing. That is to say, the detachable knob 58 acts as a sliding element to compel the breech bolt to move rectilinearly and prevents the rotation thereof, and at the same time constitutes a detachable retaining element for holding the breech bolt in place in the breech casing. Owing to its construction, the knob may be readily removed to take the gun apart. Furthermore, in case the gun becomes jammed, or the main spring temporarily refuses to work, this knob being exposed through the casing constitutes a convenient means for operating the breech bolt by hand.

The magazine M shown in the drawings is only one form of magazine that may be utilized in connection with the present firearm, since the improved mechanism described in the foregoing specification is intended to be available for use with any type of magazine that may be fitted to the gun. Furthermore, any conventional ejector means may be employed for removing the empty shells from the feed zone between the breech bolt and firing chamber of the gun barrel.

Without further description, it is thought that the many features and advantages of the present invention will be readily apparent, and it will, of course, be understood, that various changes in the form, proportion, and minor details of construction may be resorted to without departing from the spirit of the invention or scope of the appended claims.

I claim:

1. In an automatic firearm, a recoil-operated barrel, a spring actuated breech-bolt device including a tubular bolt carrier, a firing pin coaxially arranged within the carrier and rigidly connected at one end thereto, a cartridge positioning bolt slidably mounted in the bolt carrier and slidable upon the firing pin, and an automatic device for temporarily locking the bolt to the carrier, and means for automatically locking the bolt to the barrel and releasing it therefrom.

2. An automatic firearm including a recoil operated barrel, locking means for holding said barrel in a relatively fixed position, a spring actuated breech bolt having means for placing a cartridge in the barrel and also having means for releasing said locking means to permit the recoil of the barrel, and a trigger device having means engaging and releasing the breech bolt.

3. An automatic firearm including a spring tensioned barrel, locking means for holding the barrel in firing position, a spring actuated breech bolt having cartridge positioning means, and also having means for releasing said locking means to permit recoil of the barrel, holding lugs carried by the rear end of the barrel adapted to automatically engage said cartridge positioning means, and a trigger device for engaging and releasing the breech bolt.

4. An automatic firearm including a tubular casing, a rifle barrel in the casing, means for holding the barrel in firing position, a spring actuated breech bolt slidable in the casing, means for automatically locking said breech bolt to the barrel and releasing it therefrom, and a trigger device for engaging and releasing said breech bolt.

5. An automatic firearm including a tubular casing, a rifle barrel in the casing, a spring for positioning the barrel in the casing, a barrel locking detent, a spring actuated breech-bolt device slidable in the casing, said device including a bolt carrier having means for automatically releasing said barrel locking detent, a rectilinearly and rotatably movable breech-bolt having a locking engagement with the barrel, and means for locking the breech-bolt in an extended position, and a trigger device for engaging and releasing said breech-bolt device.

6. An automatic firearm including a tubular casing, a rifle barrel in the casing, inturned holding lugs at the loading end of said barrel, a spring for positioning the barrel in the casing, a spring pressed detent for engaging the loading end of the barrel to hold the same in firing position, a spring actuated breech bolt device including a bolt carrier having means for engaging said

spring pressed detent to release the barrel, and also having a rectilinearly and rotatably movable breech bolt having means for engaging with said holding lugs on the end of the barrel, a firing pin carried by the bolt carrier and projecting axially through the bolt, means for engaging and releasing the breech bolt to permit movement thereof, and a trigger device for engaging and releasing the carrier of the breech bolt device.

7. In an automatic firearm, a tubular casing, a rifle barrel in the casing, inturned holding lugs carried by the loading end of said barrel, a spring for positioning the barrel within the casing, a spring-pressed detent for engaging the loading end of the barrel to hold the same in firing position, a spring actuated breech bolt device including a bolt carrier having means for engaging said spring pressed detent to release the barrel, said breech bolt device also including a movable breech bolt having oppositely disposed locking projections for engaging said holding lugs at the end of the barrel, a firing pin carried by the bolt carrier and projecting axially through the bolt, a spring pressed pawl carried by the bolt carrier for locking the said movable bolt in extended position, a cam carried by said casing for engaging with said pawl to release said bolt, and a trigger device for engaging and releasing the carrier of the breech bolt device.

8. In an automatic firearm, a tubular casing, a rifle barrel therein, inturned holding lugs carried by the loading end of said barrel, a barrel retracting spring, a spring-pressed detent for holding the barrel in firing position, a spring actuated breech bolt device including a bolt carrier having means for engaging said spring pressed detent, and also having a socket, a breech bolt fitting in said socket and having a spiral slot in its periphery, a pin projecting through the body of said carrier and fitting in said slot, said breech bolt also having oppositely disposed locking projections for engaging said holding lugs at the end of the barrel, a firing pin carried by the bolt carrier and projecting axially through the bolt, means for locking said bolt in extended position, a cam carried by said casing for engaging said means to release the bolt, and a trigger device for engaging and releasing the carrier of the breech bolt device.

9. An automatic firearm including a recoil operated barrel, a spring-projected breech bolt device having a releasable interlocking connection with the barrel and provided with spaced shoulders, a rocking sear having separate elements respectively engaging said spaced shoulders of the breech bolt device, and a spring-retracted trigger having an operating connection with the sear.

10. An automatic firearm including a recoil operated barrel, a spring projected breech bolt having a releasable interlocking connection with the barrel and provided with a shoulder located adjacent each end thereof, a rocking sear having separate elements respectively engaging said shoulders of the breech bolt, and a spring retracted trigger member having a link connection with the sear.

11. An automatic firearm including a recoil operated barrel, a spring projected breech bolt having a releasable interlocking connection with the barrel and provided with a check shoulder located adjacent its front end and a cocking shoulder located adjacent its rear end, a rocking sear having separate elements for respectively engaging said check and cocking shoulders of the breech bolt, and a spring-retracted trigger member having a link connection with the sear.

12. An automatic firearm including a recoil operated barrel, a spring projected breech bolt having a releasable interlocking connection with the barrel and provided with spaced shoulders, a rocking sear having double means for engaging said shoulders in successive order, and a spring retracted trigger member having an operative connection with the sear.

13. In an automatic firearm, the combination with a breech mechanism and a sliding gun barrel, of a clip fitted to the barrel and having a hinged attaching member interlocking with the barrel, and a retracting spring connecting with said element and a fixed point of attachment.

14. In an automatic firearm, the combination with the stock and breech mechanism, of a tube fitted in the stock, a main spring arranged in the tube, a tension device for the main spring accessible through the butt end of the stock, and an operating connection between the main spring and the breech mechanism.

In testimony, that I claim the foregoing as my invention, I have signed my name in presence of two subscribing witnesses.

OLIVER BERRY SAALFIELD.

Witnesses:
LAURANCE ANGEL,
CHAS. E. WALTON.

Copies of this patent may be obtained for five cents each, by addressing the "Commissioner of Patents, Washington, D. C."

Exhibit P. 14.

Exhibit P. 16.

EXHIBIT P. 15.

(Model of Brown Air-cooled Shoulder Machine Rifle.)

EXHIBIT P. 16.

September 4, 1915.

Maxim Munitions Corporation,
52 Broadway,
New York City.

Dear Sirs:

After a conference with Mr. Edward Beckert, the Vice President of your corporation I have decided that I will sign the agreements, assigning, transfer and setting over all my right and titles, etc. to the Brown Air-Cooled Shoulder Machine Rifle to Robert Sweeny on the following conditions.

That I am to be appointed as Consulting Engineer to the Advisory Board of your company at a salary of not less than $6000.00 per year, contract to cover a period of not less than three years; that in the event that I am called upon to make any trips of inspection to various factories that I am to receive my full travelling expenses and first-class accomodations therewith.

For the above consideration I am prepared to give as much time as is reasonably required to assist you in every way possible, but retain privilege of accepting consultation and other mechanical work along the lines of my profession so long as it does not compete with the interests of your corporation.

Exhibit P. 16.

In addition to the above compensation this salary will be paid on the first day of each and every month unless it is so arranged by your corporation that pay days come on some other day. The first salary payment due under this consideration to be paid October 1st, 1915.

As a further consideration for the transfer of the above mentioned rights and patents it is agreed that I will accept a reasonable amount of stock of the Maxim Munitions Corporation in full payment, said amount to be decided by your Mr. Beckert, Mr. Sweeny and Capt. Angel. It is understood that I look forward to a generous arrangement but wish only to be fair.

Trusting that this arrangement will be satisfactory, I remain.

Very truly yours,

J H BROWN

Exhibit P. 17.

EXHIBIT P. 17.

September 4th, 1915.

J. H. Brown, Esq.,
30 Church Street,
New York City.

Dear Sir:

I am in receipt of your kind favor of this day and have noted contents and fully appreciate the value of the transfer that you offer to make for the considerations named in your letter.

In reply allow me to say that I accept the conditions mentioned by you regarding your employment as one of the Consulting Engineers of the Advisory Board at a salary of $6000 a year, compensations to begin the first day of October, 1915. I further appreciate your offer in regard to the stock arrangement and will take this matter up with Capt. Angel and Mr. Sweeny who I have every reason to believe that they will deal fairly in the matter, as they have already given me their assurances to that effect.

Very truly yours,

BECKERT [in pencil]

Exhibit P. 18.

EXHIBIT P. 18.

HUDSON MAXIM, President Telephone RECTOR 956

MAXIM MUNITIONS CORPORATION
EQUITABLE BUILDING
ONE HUNDRED TWENTY BROADWAY
NEW YORK

Cable Address:
MAXIMUNICO-NEW YORK
Codes:
A B C—4th EDITION
WESTERN UNION

December 16th, 1915.

United States Mortgage & Trust Co.
55 Cedar Street,
New York City.

Dear Sirs:

I hereby authorize and direct you to deliver to John H. Brown, c/o Maxim Munitions Corporation, 120 Broadway, N. Y., upon the termination of the present escrow agreement, or upon the termination of any subsequent escrow agreement that may be executed by me and other stockholders of the Maxim Munitions Corporation, Certificate Nos. 244/258 inclusive, aggregating 1500 shares of the Capital Stock of the Maxim Munitions Corporation, of the par value of $10.00

Very truly yours,

ROBERT SWEENY

RS/SEF.

New Jersey State Library

EXHIBIT P. 19.

Meeting of the Executive Committee of Board of Directors of Maxim Munitions Corporation held at the office of the Company 120 Broadway, New York City, November 8th, 1915, at 3:00 P. M. pursuant to written waiver:

All the members of the Executive Committee being present, Mr. Beckert called the meeting to order and Mr. Taylor, the Secretary of the Company, recorded. Secretary presented the waiver of notice of call of this meeting, signed by all the members of the Committee. The same was ordered spread upon the minutes.

* * *

Mr. Robert Sweeny orally stated at the meeting that he was willing to turn over to the Company, three hundred thousand (300,000) shares of stock for treasury purposes, in consideration of the cancellation of his contract of September 9th, 1915.

A full discussion of this proposal followed and Mr. Sweeny absented himself from the room.

Whereupon, the following RESOLUTION being moved and seconded was unanimously carried, Mr. Sweeny being absent and not voted.

WHEREAS this corporation entered into an agreement with Mr. Robert Sweeny, dated September 9th, 1915, wherein and whereby said Robert Sweeny agreed to advance funds to the extent of Two Million ($2,000,000) Dollars to this corporation, upon certain terms and conditions, one of which conditions was that the said contract does not become operative and no advance of any sort be required thereunder

Exhibit P. 19.

unless and until this corporation should have first actually have secured a valid and profitable contract for the supply of munitions, ordinances or other war materials, calling for a payment under said contract in the sum of Ten Million ($10,000,000) dollars, and

WHEREAS, this corporation has not secured a contract or contracts sufficient to make ~~the operation~~ of such agreement with Robert Sweeny operative, and

WHEREAS Mr. Robert Sweeny, by oral declaration has offered to turn into the Treasury of this corporation, for such disposition as the Board of Directors by its Executive Committee shall deem best for the corporate interests, three hundred thousand shares of the capital stock of this corporation, without further or other consideration from this corporation than the cancellation of the agreement heretofore made between this corporation and him, dated September 9th, 1915, and

WHEREAS it is the unanimous opinion of the members of this Board that it is most advantageous to this corporation to take advantage of the offer made by Mr. Robert Sweeny, in view of the fact that the corporate affairs can be more readily adjusted and its business more advantageously handled through the use of the said three hundred thousand shares of capital stock for business purposes,

NOW THEREFORE, it is unanimously RESOLVED (Mr. Sweeny having absented himself from the meeting and taking no part in the adoption of this resolution), that the said oral offer by Mr. Robert Sweeny to transfer to the treasury of this corporation, for disposition by its officers (under the direction of the executive committee)

Exhibit P. 19.

three hundred thousand shares of the capital stock of this corporation, upon condition that the same be used for corporate purposes as and when the best judgment of the Board or the Executive Committee thereof shall determine, in exchange for the cancellation by this corporation of that certain agreement, dated September 9th, 1915, between this corporation and Mr. Robert Sweeny, be and the same hereby is accepted and the proper officers of this corporation are hereby authorized, empowered and directed to deliver said agreement and any and all memoranda thereof to Mr. Robert Sweeny for his cancellation immediately upon the delivery by Mr. Robert Sweeny of three hundred thousand shares of the capital stock of this corporation, properly endorsed so as to place the same in the treasury of this corporation for its corporate uses.

Upon motion duly made, seconded and unanimously carried, it was—

RESOLVED that the proper officers of this corporation be and they hereby are authorized, empowered and directed to re-pay to Mr. Robert Sweeny, any and all sums which may have been heretofore advanced by him to this corporation, out of the first funds available for that purpose.

* * *

There being no further business the meeting adjourned.

B. F. TAYLOR
Asst. Secretary

Exhibits P. 20, P. 21.

EXHIBIT P. 20.

[Warranty deed, dated November 22, 1915, executed and acknowledged on behalf of The Fuller Manufacturing Company, conveying to Maxim Munitions Corporation land and buildings described in Exhibit P. 8, also certain general machine tools and machinery then contained and used in the building conveyed.]

EXHIBIT P. 21.

[Map and picture of land and buildings of The Fuller Manufacturing Company.]

Exhibit P. 22.

EXHIBIT P. 22.

HUDSON MAXIM, President Telephone RECTOR 956

MAXIM MUNITIONS CORPORATION
EQUITABLE BUILDING
ONE HUNDRED TWENTY BROADWAY
NEW YORK

Cable Address:
MAXIMUNICO-NEW YORK

Codes:
A B C—4th EDITION
WESTERN UNION

January 5th, 1916.

United States Mortgage & Trust Co.
55 Cedar Street,
New York City.

Dear Sir:

SUBJECT:

I hereby authorize and direct you to deliver to B. F. Taylor, c/o Maxim Munitions Corporation, 120 Broadway, New York, upon the termination of the present escrow agreement or upon the termination of any subsequent escrow agreement that may be executed by me, and other stockholders of the Maxim Munitions Corporation, Certificate No. 326 for 5000 shares of the Capital stock of the Maxim Munitions Corporation, of the par value of $10.00.

Very truly yours,

ROBERT SWEENY.

RS/SEF.

EXHIBIT P. 23.

Meeting of the Executive Committee of Board of Directors of Maxim Munitions Corporation, held at the office of the Company, #52 Broadway, September 9th, 1915, at 4.00 P. M., pursuant to written waiver:—

All the members of the Executive Committee being present, Mr. Beckert called the meeting to order and Mr. Taylor, the Secretary of the Company, recorded. Secretary presented the waiver of notice of call of this meeting, signed by all the members of the Committee. The same was ordered spread upon the minutes.

[Waiver of Notice]

There was presented to the meeting, the resignation of Winfield P. Porter, as Director, to take effect immediately, and on motion duly made, seconded and carried, the resignation of Mr. Porter was accepted.

The name of Hudson Maxim was proposed as Director, to take the place of Mr. Porter, and on motion duly made and carried, Mr. Maxim was unanimously elected Director; and the Secretary was instructed to advise him of his election.

The resignation of Mr. Wm. A. Scully, as President, was presented, and on motion duly made and carried, Mr. Scully's resignation was accepted with regrets and thanks. The Secretary was instructed to advise Mr. Scully of the acceptance of his resignation.

The name of Hudson Maxim was presented, to act as President in place of Mr. Scully, and

Exhibit P. 23.

on motion duly made, seconded and carried, Mr. Maxim was unanimously elected President, of the Maxim Munitions Corporation; and the Secretary was instructed to advise Mr. Maxim of his election.

There being no further business coming before the meeting, it was—on motion duly carried —adjourned.

B. F. TAYLOR
Secretary.

New York, September 9, 1915.

To the Board of Directors of the
Maxim Munitions Corporation,
52 Broadway, New York City.

Gentlemen:—

I hereby resign as a Director of the Maxim Munitions Corporation, said resignation to take effect immediately.

Very truly yours,

WINFIELD P. PORTER

Exhibit P. 23.

Contracts Accepted Subject To Contingencies Beyond Our Control. Quotations Subject to Change Without Notice.

MILTON BRICK COMPANY
Manufacturers of
Red Shale Paving Blocks
Rough Texture and Smooth Face Building Bricks

Factory and General Office Milton, Pa.

New York Office Marbridge Building 47 W. 34th Street Greely 1166

New York Office, 47 West 34th St.,

September 9th 1915.

Maxim Munition Corporation,
52 Broadway, New York.

Gentlemen:—

I hereby resign as President of the Maxim Munitions Corporation.

With best wishes for the success of the company, I beg to remain

Very truly yours,

WM. A. SCULLY.

Exhibit P. 24.

EXHIBIT P. 24.

HUDSON MAXIM, President Telephone RECTOR 956

MAXIM MUNITIONS CORPORATION
EQUITABLE BUILDING
ONE HUNDRED TWENTY BROADWAY
NEW YORK

Cable Address:
MAXIMUNICO-NEW YORK

Codes:
A B C—4th EDITION
WESTERN UNION

December 15th, 1915.

United States Mortgage & Trust Co.
55 Cedar Street,
New York City.

Dear Sirs:

I hereby authorize and direct you to deliver to W. A. Scully, c/o Maxim Munitions Corporation, 120 Broadway, N. Y., upon the termination of the present escrow agreement, or upon the termination of any subsequent escrow agreement that may be executed by me and other stockholders of the Maxim Munitions Corporation, Certificate 331 for 1000 shares of the Capital stock of the Maxim Munitions Corporation, of the par value of $10.00 each.

Very truly yours,

ROBERT SWEENY

RS/SEF.

Exhibit P. 25.

EXHIBIT P. 25.

MAXIM MUNITIONS CORPORATION
Statement as of December 31, 1915.

ASSETS		
Cash on hand & deposit	$ 231,677.32	
Accounts Receivable	4,436.91	
Merchandise	271.35	
Plants & Equipment	404,980.82	
Furniture & Fixtures	2,605.10	
Organization & Development	60,996.29	
Patents, Goodwill, etc.,	9,999,650.00	
Unexpired Insurance	1,307.21	
	$10,705,925.00	
LIABILITIES		
Mortgages & Notes Payable	$ 310,000.00	
Accounts Payable	33,000.00	
Capital Stock	10,000,000.00	
Surplus	362,925.00	
	$10,705,925.00	

Exhibit P. 26.

EXHIBIT P. 26.

SEPTEMBER 1st 1915

3	Legal Exp			
	U. S. Corpo. Co.....	635.00		
	Mary C. Hyatt.....	22.98	657.98	
5	Furniture & Fixtures.....		200.00	
	David Kramer			
7	General Expense		14.	
	Oliver T. W. Co.....	4.00		
	Petty Cash	10.00		
I	To Robert Sweeney...			871.98

SEPT. 3, 1915

21	Salaries	300.	
I	To Robert Sweeney...		300.
	Adv. to Capt. Angel 200 8/27		
	Adv. to Capt. Beckert 100 9/3		

SEPT. 14

18	Edward Beckert Expense a/c	500.	
I	To Robert Sweeny....		500.
	Cash advanced		

SEPT. 15

18	Edward Beckert Expense a/c	100.	
21	To salaries		100.
	$100 advanced to Beckert 9/3		
	& chgd. to salaries		

SEPT. 4

31	Patents, Property, Inventions & G. W.....$9,999,650		
32	Directors stock	210	
33	Treasury stock	140	
34	To Capital Stock		10,000,000

see Minute book of Sept. 4th meeting

Exhibit P. 27.

EXHIBIT P. 27.

MAXIM MUNITIONS CORPORATION

TRIAL BALANCE

December 31, 1915.

Account	Dr. Dr.	Cr.
Legal Expense	$ 3,560.13	$
Furniture & Fixtures	2,488.85	
General Expense	4,964.49	
Stock Certificate	296.00	
Transferring & Registering	272.50	
Plant a/c Fuller Plant	250,000.00	
Edward H. Beckert Expense a/c	1,100.00	
Traveling Expense	846.78	
Salaries	8,138.98	
Revenue Stamps	5,219.00	
Brown Air Cooled Shoulder Rifle	777.27	
Hiram Percy Maxim Guarantee	25,000.00	
Working Models	2,055.07	
Surplus		$ 362,925.00
Patents, Property, Inventions & Goodwill	9,999,650.00	
Capital Stock		10,000,000.00
Insurance	224.33	
Drafting Room Labor	2,499.54	
Cash	52,830.86	
Interest Discount & Exchange		63.82
Drawings & Paterns	1,003.70	
Drafting Room Expense	12.79	
Factory Pay Roll	12,450.60	
Sample Guns	1,773.14	
Drafting Room Equipment	579.03	
Cartridge Plant Machinery	33,500.00	
" " a/c	75,000.00	
" a/c Expense	433.52	
" Plant Salaries	510.43	
" " Bond Expense	11,900.00	
Tools, Jigs & Dies	357.06	
Petty Cash	20.73	
Stores, Drop Forge Plant	1,933.35	
Syndicate Managers		25,000.00
Factory Equipment	8.25	
Advertising	635.00	
Forging Plant	24,836.76	
Drop Forging Plant Freight & Drayage	41.53	

Exhibit P. 27.

	Drop Forging Plant Sales.....		3,464.51
	International Aircraft Co.....	900.00	
	E. J. DeSabla.....	575.00	
	Bills Payable Fuller Plant.....		225,000.00
	Cartridge account Travelling...	76.30	
	Drop Forging Payroll.....	3,009.03	
	" " Plant Ins.	91.09	
	" " Expense	246.79	
10	" " Discount	6.29	
	Petty Cash	29.43	
	Listing Expense	25.00	
	General Sales Expense.....	200.00	
	Forward $10,530,079.62		$10,616,453.33

SHEET No. 2

	Account	Dr. Dr.	Cr.
	Brought Forward.....$10,530,079.62		$10,616,453.33
	Factory Expense	607.87	
	Cartridge a/c expense.....	235.00	
20	Drop Forging Traveling Expense	44.70	
	" " Customers	2,961.91	
	Stationery & Printing.....	260.25	
	Telephone & Telegrams.....	248.06	
	Main Plant Machinery,.....	1,914.45	
	" " Freight & Drayage.	1.50	
	" " Insurance	1,082.88	
	" " Furniture & Fixtures	116.25	
	" " Petty Cash	48.30	
	" " Traveling Expense.	11.25	
	Maryland Casualty Co.....	100,000.00	
	International Machine & T. Corp.	17,489.82	
30	Victor Typewriting Co.....	300.00	
	U. S. Mortgage & Trust Co.....	53,750.00	
	Consolidated Rolling Mill & Fdy. Co.	81.60	
	Commissions		8,000.00
	Ousatonic Water Power Co.....		70,000.00
	Union & New Haven Trust Co...		15,000.00
	Purchasing Dept.	75.00	
	Edw. H. Beckert.....	118.50	
	Main Plant Stores.....	29.37	
		$10,709,453.33	$10,709,453.33

40

Exhibits P. 28, P. 29.

EXHIBIT P. 28.

[Ledger of Maxim Munitions Corporation, September, October, November and December, 1915.]

Patents, Property Inventions & Good Will

1915			1915		
Sept. 4	To Cap. Stock J1	$9,999,650.	Nov. 16	By Treas. Stock J2	$3,000,000.
Dec. 31	Treas. Stock J7	3,000,000.			

EXHIBIT P. 29.

THIS AGREEMENT, made and entered into this tenth day of February, Nineteen hundred and sixteen, by and between BENJAMIN F. TAYLOR, of the City of New York, hereinafter called the "Syndicate Manager," party of the first part, and the subscribers hereto severally, parties of the second part, of whom each is hereafter called the "Subscribers," and all of whom together with the said party of the first part constitute the Syndicate.

WITNESSETH:

WHEREAS, on or about the 24th day of August, 1915, the MAXIM MUNITIONS CORPORATION, was duly organized under the Laws of the State of Delaware, with a capital stock of Ten Million Dollars ($10,000,000), divided into One Million (1,000,000) shares of the par value of Ten Dollars ($10.) each, and

WHEREAS, the said corporation began business in the City of New York and obtained from the Secretary of the State of New York authority to do business therein, and

WHEREAS, the said MAXIM MUNITIONS CORPORATION acquired in the City of New Haven and

Exhibit P. 29.

suburbs three (3) plants known respectively as the "Fuller Plant," "Seward Plant," and the "Secor Plant," the title thereto vesting in the said MAXIM MUNITIONS CORPORATION, upon which substantial amounts have been paid on account of the purchase price thereof, and

WHEREAS, thereafter, and on or about the 15th day of November, 1915, the said MAXIM MUNITIONS CORPORATION entered into a contract with the Danish Government for Thirty million (30,000,000) cartridges, against which an established credit was fixed by the said Danish Government with the National City Bank of the City of New York, and in addition a payment of Three hundred and forty-five thousand Dollars ($345,000.) made available to the MAXIM MUNITIONS CORPORATION, for the purpose of purchasing materials in connection with the said contract, and

WHEREAS, about forty-nine thousand (49,000) shares of said MAXIM MUNITIONS CORPORATION was turned over to J. ROBINSON DUFF, a member of the New York Stock Exchange and placed by him on the curb market and dealt in and is now selling for about Eight Dollars ($8.) per share, and

WHEREAS, the balance of the entire capital stock of said MAXIM MUNITIONS CORPORATION, now escrowed, is available to the party of the first part with the exception of about Two hundred and twenty thousand shares now in the Treasury of said MAXIM MUNITIONS CORPORATION, and about Fifty-two thousand shares which are escrowed, and

WHEREAS, the MAXIM MUNITIONS CORPORATION is about to sign an order with the Russian Government for One thousand (1,000) machine guns,

Exhibit P. 29.

with an option to the Russian Government to purchase nine thousand (9,000) more, and

WHEREAS, the Greek Government is negotiating for the purchase of Five hundred (500) guns, and

WHEREAS, the Italian Government is likewise negotiating for two thousand (2,000) guns, and

WHEREAS, these orders, according to the judgment of experts employed by the MAXIM MUNITIONS CORPORATION, are very profitable to it, and

WHEREAS, it is necessary to raise from One hundred thousand to two hundred thousand dollars in order to comfortably arrange for the handling of the aforesaid contracts, and

WHEREAS, said one hundred thousand to two hundred thousand dollars is to be placed in the treasury of the MAXIM MUNITIONS CORPORATION for this purpose and none other, and

WHEREAS, it is impossible to sell any stock of the MAXIM MUNITIONS CORPORATION which it has escrowed, and

WHEREAS, the proceeds of any sold for the treasury would be for the benefit of the Company and no other, and

WHEREAS, with the exception of five hundred and ten thousand (510,000) shares hereinafter set forth and the stock now escrowed and on the market as above set forth, the balance of said stock shall be escrowed until December 31st, 1916, or for a longer period in the judgment of the Syndicate.

NOW, THEREFORE, in consideration of the premises, and the sum of One Dollar by each of the parties to the other in hand paid, the receipt whereof is hereby acknowledged, the subscribers hereto agree with one another as follows:

Exhibit P. 29.

The Subscribers hereby form a Syndicate for the purposes herein expressed, with a maximum obligation of Two hundred thousand Dollars ($200,000) for which the Syndicate will receive fifty-one per cent. (51%) of the entire capital stock of the MAXIM MUNITIONS CORPORATION, or five hundred and ten thousand (510,000) shares, which will be escrowed for such a period as in the judgment of the Syndicate is proper, and it will then apportion the same among each of the subscribers hereto according to the amount which he will subscribe, in the proportion that his subscription bears to the entire amount needed, namely, One hundred thousand ($100,000), or Two hundred thousand Dollars ($200,000), as the Syndicate may determine, and on that basis each subscriber for himself and not for any other, hereby agrees to purchase and take from the Syndicate and the Syndicate agrees to deliver the amount of stock of the MAXIM MUNITIONS CORPORATION in whatever proportion according to his contribution each subscriber may be entitled thereto on the aforesaid basis, one half of said subscription by each subscriber to be paid upon the execution of this instrument, and the balance as, when and if needed by the syndicate, of which the syndicate shall be the sole judges.

Nothing contained in this agreement or otherwise, shall constitute the subscribers partners with or agents for one another or for the syndicate manager or render them liable to contribute in any event more than is hereinafter set forth.

This agreement shall be in all things binding upon and inure to the benefit of the heirs,

Exhibit P. 29.

executors, administrators, successors and assigns of the parties hereto.

In Witness Whereof, the Syndicate Manager, party of the first part, and the subscribers, parties of the second part, have subscribed this agreement on and after the day and year first above written.

BENJAMIN F. TAYLOR
Syndicate Manager.

Subscribers Address	Par Value of Stock Subscribed	Amount to be Paid
J. W. O'Bannon, 12 W 44 New York	$1,275,000.	$ 50,000.
Robert Sweeny, Hotel Netherland, NY	637,500.	25,000.
Gaston, Williams & Wigmore, Inc. 140 Bway, by R. M. Lee Martin, Sec'y.	637,500.	25,000.
Esmond P. O'Brien, 26 Beaver St.	739,500.	29,000.
Geo. W. Sanborn, Utica, N. Y.	127,500.	5,000.
T. D. Palmer, Syracuse, N. Y.	127,500.	5,000.
C. J. Gleason, 111 Broadway	382,500.	15,000.
William P. Maloney, 41 Wall	127,500.	5,000.
Herbert Lowell Dillon, 71 B'way	127,500.	5,000.
William T. Koch, c/o Koch Dept Store 125 St.	127,500.	5,000.
Chas. A. Wimpheimer, 450-460 Fourth Ave.	255,000.	10,000.
Julius Siegbert, 114 Green St. NY	76,500.	3,000.
J. Campbell Thompson, as atty. for a client	127,500.	5,000.
Saml. Zucker, 715 B'way	76,500.	3,000.
J. Campbell Thompson, as atty. for a client	127,500.	5,000.
J. B. Spencer, Syracuse, N. Y.	63,750.	2,500.
A. J. Hoffman, Syracuse, N. Y.	63,750	2,500.
	$5,100,000.	$200,000.
James S. Laing, Trustee	25,500 shares	

Exhibit P. 30.

EXHIBIT P. 30.

KNOW ALL MEN BY THESE PRESENTS, that for and in consideration of the sum of One Dollar and other good and valuable considerations unto me moving from the subscribers to the Syndicate Agreement hereinafter mentioned, receipt of which is hereby acknowledged, I, J. Campbell Thompson, 63 Wall Street, New York City, DO HEREBY CERTIFY, that, pursuant to a syndicate agreement dated February 10th, 1916, between Benjamin F. Taylor, syndicate manager, and others, copy of which you have, I now hold in my possession as trustee, subject to the terms of said syndicate agreement, Five hundred and ten thousand (510,000) shares of the capital stock of Maxim Munitions Corporation, of which you are entitled to
shares subject to the terms of said syndicate agreement.

Under the terms of such agreement neither the said stock, nor any part thereof, nor this certificate, is saleable, negotiable or transferable, or capable of being mortgaged or pledged, until December 31, 1916, or such later date as may be fixed by the subscribers to said syndicate agreement; and the holder hereof, to wit:

covenants and agrees that he will not sell, assign or transfer this certificate or the said stock or any part thereof, or offer for sale for present or for future delivery or otherwise, or make any contract, written or oral, for the loan, mortgaging or pledge of the same until the said 31st day of December, 1916, or such later date as may be fixed by the subscribers to said syndicate agreement.

Exhibit P. 30.

The receipt of this certificate by the person entitled to the above number of shares, to wit: shares is a sufficient acceptance and confirmation of the covenants and agreements herein contained.

IN WITNESS WHEREOF, I have hereunto set my hand and seal this day of April, 1916.

.....L. S.

STATE OF NEW YORK,
COUNTY OF NEW YORK, } *ss.*
CITY OF NEW YORK.

On this day of April, 1916, before me personally appeared J. Campbell Thompson, to me known and known to me to be the person described in and who executed the foregoing instrument, and he duly acknowledged to me that he executed the same.

Exhibit P. 31.

EXHIBIT P. 31.

[Cash book of Maxim Munitions Corporations, 1916.]

Cash Receipts—February, 1916.

Date		Received from		Folio***	Credits. General Ledger ****
1916					
		* * * * *			
Feb.	23	***			
	"	Surplus		372	$ 8,750.—
		Esmond P. O'Brien.....	2,500.		
		A. J. Hoffman.....	1,250.		
		T. D. Palmer.....	2,500.		
		H. L. Dillon.....	2,500.		
		* * * * *			
	"	Surplus		372	2,750.—
		Esmond P. O'Brien.....	1,250.		
		Sam'l Zucker	1,500		
		* * * * *			
	25	Surplus		"	2,500.—
		Esmond P. O'Brien.....	2,500.		16,250.—
		Gaston Williams & Wigmore	12,500.		
		J. B. Spencer.....	1,250.		
		* * * * *			

Cash Receipts—March, 1916.

Date		Received from		Folio***	Credits. General Ledger ****
		* * * * *			
1916					
Mar.	1	***			
	"	Surplus, Esmond P. O'Brien		372	$ 5,000.—
	"	" Robert Sweeny		"	12,500.—
		* * * * *			

Exhibit P. 31.

4	***				
"	Surplus			372	15,250.—
	Julius Siegbert	750.			
	C. A. Wimpfheimer.....	2500.			
	C. J. Gleason.....	3750.			
	Gaston, Williams & Wigmore	6250.			
	Sam'l Zucker	750.			
	Esmond P. O'Brien.....	1250.			
	* * * * *				
6	***				
"	Surplus			372	12,500.—
	W. T. Koch.....	1250.			
	H. L. Dillon.....	1250.			
	Wm. P. Maloney.....	1250.			
	J. Campbel Thompson, atty for a client.....	1250.			
	" "	1250.			
	Robert Sweeny	6250.			
	* * * * *				
8	****				
"	Surplus			372	
	Geo. W. Sanborn.....	1250.			1,250.—
	* * * * *				
"	Surplus			372	1,875.—
	Esmond P. O'Brien.....	1250.			
	" " "	625.			
9	Surplus			372	1,250.—
	T. D. Palmer.....	1250.			
	* * * * *				

Cash Receipts.

Date	Received from		Folio***	General Ledger ****
	* * * * *			
Mar. 24	***			
"	Surplus			
	A. J. Hoffman.....	625.	372	625.—
	* * * * *			
"	Surplus			625.—
	Esmond P. O'Brien.....	625		
	* * * * *			
31	Surplus T. D. Palmer.....		372	1,250.—
	* * * * *			

EXHIBIT P. 32.

For Identification.

[Not printed.]

EXHIBIT P. 33.

DEPARTMENT OF COMMERCE

UNITED STATES PATENT OFFICE

To all persons to whom these presents shall come, Greeting:

THIS IS TO CERTIFY that the annexed is a true copy from the records of this office of the File Wrapper and Contents, with the exception of Paper 8; and Drawings, in the matter of the Abandoned Application of

Hudson Maxim,

Filed November 13, 1914, Serial Number 871,883, for

Improvement in Periscopes or Position Finders for Submarine Torpedo Boats or Other Vessels.

IN TESTIMONY WHEREOF I have hereunto set my hand and caused the seal (SEAL) of the Patent Office to the affixed, at the City of Washington, this sixth day of March in the year of our Lord, one thousand nine hundred and twenty-six and of the Independence of the United States of America the one hundred and fiftieth.

THOMAS E. ROBERTSON
Commissioner of Patents.

Attest:
D. E. WILSON,
Chief of Division.

[Letter of Transmittal.]

[Petition]

Exhibit P. 33.

SPECIFICATION.

To All Whom It May Concern:

Be it known that I, Hudson Maxim, a citizen of the United States, residing in the Borough of Hopatcong, Sussex County and State of New Jersey, have invented certain new and useful improvements in Periscopes or Position Finders for submarine torpedo boats or other vessels, of which the following is a description:

Heretofore it has been necessary to employ a position finder or periscope fixed with respect to the submarine with the periscope, when taking a view, projecting above the surface of the water to a definite height, so that it not only can be seen by the enemy, but also forms a conspicuous target, and furthermore produces a wake or ripple even when wholly submerged, which enables the enemy to locate the submarine running beneath the surface of the water.

My invention consists, in its simplest form, of a periscope tube vertically movable with respect to the submarine, and in its more complete form, in the combination of a periscope and photographic apparatus; in other words, of a periscope or periscopic camera adapted to be projected telescopically above the surface of the water from a submarine while in a wholly submerged position to take a view or photographic snapshot of the surrounding scene or seascape with objects thereon, and be quickly drawn down again beneath the surface of the water. This device may be adapted to be operated either by hand, electricity or compressed air. The process of taking a view or photograph of the view of this method requires but a fraction of a sound; the operation of projecting the periscope

Exhibit P. 33.

above the water and retiring it being so quick as to escape observation of the most watchful enemy, unless, perchance, he happens to be looking exactly at the spot where the uplift of the periscope takes place. Even in that case the enemy would not know whether it were a submarine taking observations or a fish jumping out of the water.

Heretofore the seascape has been reflected by the mirror or mirrors of the permanently supported periscope downward upon a table or screen in the cabin of the submarine where the image is studied. By the present method, without the submarine rising, not only may the picture be seen, but a photograph of the image may also be taken of the picture that had been under the observation of the officers. This may be done by means of any suitable mirror and photographic lens. The photograph may be taken of small dimensions, developed, and then thrown many times enlarged on a table or screen by a strong light. In fact, a moving picture may be taken of the surrounding country, and then reproduced in the usual manner and thrown upon the screen or table under the eyes of the officers.

The invention will be better understood from a detailed description thereof in connection with the accompanying drawings, in which:

Figure 1 is a vertical central sectional elevation, showing the periscope or periscopic camera in its elevated position, the view being foreshortened to accommodate it to the sheet.

Figs. 2 and 3 are cross-sections of the same taken on the lines 2, 2 and 3, 3 of Figure 1.

Exhibit P. 33.

Figure 4 is an elevation of the upper portion of the periscope, showing a familiar form of mirror.

Figures 5 and 6 are vertical central sectional elevations of modifications of the periscope camera in its down position, illustrating also different modes of elevating and retiring the periscope. Fig. 7 is a further modification.

Referring to said drawings, the periscope tube A is mounted to slide vertically through a gland or stuffing box B, provided in the upper shell of a submarine C, from its down position shown in Figs. 5 and 6 to its up position shown in Fig. 1, and return to its down position.

In the structure shown in Figs. 1 and 5, the periscope A telescopes and slides on an inner tube D, which forms the lower extension of the tube A—the tube D being held in a fixed position within the cabin of the submarine by suitable stanchions 20; while, as shown in Fig. 6, the periscope tube is guided within an outer stationary tube E.

The periscope tube A, near its upper end, is surrounded by a glazed aperture or apertures 21, interrupted by a plurality of stiffening stiles 22, which, when the periscope is in its down position is guarded by a surrounding upwardly extending flange 23, projecting from the upper shell of the submarine.

Within the upper end of the periscope tube A, and coincident with the glazed apertures 21, is mounted a suitable mirror or mirrors 24, receiving the picture and reflecting it downwardly through the tube onto a stationary mirror table 25, arranged at the lower end of the stationary tube D. As indicated in Figs. 1 and 2, there are four such mirrors 24, hence would simul-

taneously reflect four pictures onto the stationary mirror table 25; while in the modification shown in Fig. 4, wherein the use of a parabolic mirror 24a is indicated, the entire horizon, lacking the width of the stiles 22, will be reflected by that mirror downward onto the stationary mirror table. For purposes hereinafter described the mirror or mirrors 24, is or are supported by a suitable carrier 18, shaped to fit the interior of the periscopic tube A, and rotatably movable with respect thereto.

For taking a photograph of the picture reflected by the mirror or mirrors, a suitable lens or lenses 26, will preferably be interposed between the upper mirror or mirrors of the periscope and the lower stationary mirror 25; and above the stationary mirror there will also be interposed a sensitised plate or film 27, which, associated with a suitably arranged and operating shutter 28, will take the picture reflected by the upper mirror or mirrors 24, so that the sensitised plate or film, on being subsequently developed in the usual way, may be used for reflecting the picture upon a screen, for range calculations or other purposes.

The photographic lens or lenses 26, of which there are four in this illustration of the invention are carried by a suitable holder 29, within the stationary tube D; and the sensitised plate or film 27, is carried by a holder 30, removably mounted in guides in a housing 31, formed at the lower end of said tube D. The lens or lenses 26, instead of being mounted directly within the tube D, may be carried as indicated by dotted lines in Fig. 1, by depending tubes 19, supported by the mirror carrier 18, and movable with the tube A down into the lower

extension tube D when the periscope is retired to its down position.

Different from the parabolic mirror 24a, of Fig. 4, the mirror or mirrors 24 of the other forms of the periscope shown in Figs. 1 and 5 and 6, reflect only a portion of the surrounding sea or landscape, and hence provision is made to rotate or partially rotate the mirror carrier 18, so that a partially complete or complete all-round picture may be viewed and photographically taken.

Thus the carrier 18 is supported by a vertical rod or spindle 17, projecting through the head 16, of the periscope tube and sustained by ball-bearings 15, to permit freedom of rotation.

In the telescopic form shown in figs. 1 and 5, the rod 17 telescopes with a splined tubular rod 14, the upper end of which carries the holder 29, supported on ball bearings, carried by a ledge 11, of the lower tube D, while the lower end of the tubular rod is secured to a rotatable disc 13, immediately overlying the sensitised plate, and having openings coincident with the lenses and mirrors; a suitable handle 12, or other device, being provided to move the disc, lenses and mirrors as unit.

In the structure shown in figs. 1 and 2, employing four mirrors 24, four images will be reflected and four photographs taken simultaneously of four points of the compass, so that to complete the viewing or taking of substantially the entire horizon the disc, lenses and mirrors will be rotated about one-eighth of a turn.

In the structure shown in fig. 6, employing a single mirror and lens, a complete rotation of the disc 13a and mirror and lens carrier 18, is needed, to accomplish which the disc is

formed with a toothed edge or rim, engaged by a toothed wheel 10, which may be rapidly rotated by a suitable spring motor 9, or by hand through a handle 8, as shown in fig. 5. In fig. 6, the spring motor is held wound by a latch 7, which, when the periscope reaches its high position, is tripped by contact by some fixed object such as the head of the bolt 5, to be released to cause the mirror, lens and disc to rotate a complete turn.

In the fig. 5 arrangement, two mirrors and lenses are supported by the carrier 18, so that only a half rotation of the carrier and disc will be needed to view or take the entire horizon.

Many methods of quickly moving the periscope tube into and out of position-finding position may obviously be adopted. Thus, as shown in fig. 5, a lazy tongs 30, a pair of them in fact, arranged on opposite sides of the periscope, one point pivoted to the movable tube A, and another point to a fixture, such as the mirror table 25, with an arm 31, engaged by the slotted end of the piston rod of a suitable air cylinder 32, and controlled by the operator in any usual manner. In fig. 6, is represented an endless steel sprocket band 33, stretched around pulleys 34, 35, and attached to the movable tube A at a point 6, so that rotations imparted to the pulley 35 by for instance an electric motor will cause the rapid projection and retiring of the periscope whenever desired.

The partial sectional elevation, fig. 7, shows the movable periscope tube A, provided with a surrounding sleeve 4, to wholly protect the glazed apertures 21, while immersed in the sea. When the tube and sleeve have been projected a proper distance above the water line, further

upward movement of the sleeve is prevented while the tube A continues to move to its up position, exposing its mirror or mirrors to the surrounding seascape. On the down movement of the tube A, the glazed apertures are again covered by the sleeve, and then the tube and sleeve move as a unit wholly down. The upper edge of the sleeve may have a rubber wiping strip 3, to clear the glass during the movements of the tube with respect to the sleeve.

What is claimed is:

1. A submarine or other vessel having a vertically movable periscope.

2. A submarine having a vertically movable periscope and a receiving mirror.

3. A submarine having a vertically movable periscope, and a photographic camera.

4. A periscope having a mirror, a lens and a photographic sensitised surface.

Sub B¹ 5. A periscope having a reflecting mirror, a lens, a photographic sensitised surface and a receiving mirror.

6. A periscope having a rotatable reflecting mirror, a lens and a photographic sensitised surface.

7. A periscope having a rotatable reflecting mirror, a rotatable lens and a photographic sensitised surface.

8. A periscope vertically movable with respect to its support, a rotatable reflecting mirror and lens supported within the periscope and a photographic sensitised surface.

9. A periscope vertically movable with respect to its support and having a reflecting mirror, a lens fixed with respect to the vertical

Exhibit P. 33.

movement of the mirror, and a photographic sensitised surface.

10. A periscope having a stationary inner tube carrying a lens, an outer vertically movable tube carrying a mirror and means for moving the movable tube.

per B Insert B² 6 B ~~11.~~ A periscope having a stationary inner tube carrying a lens, an outer vertically movable reflector tube carrying a ~~mirror, and a sensitised surface.~~

Sub A¹ ~~12.~~ A submarine having a vertically movable periscope tube, and fixed surrounding flange on the submarine, protecting the glazed upper portion of the tube when in its down position.

13. A periscope vertically movable with respect to its support, a surrounding protecting sleeve having limited movement with the periscope.

In testimony whereof I have signed my name to this specification in the presence of two subscribing witnesses.

HUDSON MAXIM.

Witnesses:

LILIAN MAXIM
GEO. H. GRAHAM.

[Oath]

Exhibit P. 33.

DEPARTMENT OF THE INTERIOR
UNITED STATES PATENT OFFICE

Washington Dec. 19, 1914

Hudson Maxim,
Landing,
New Jersey.

U. S. PATENT OFFICE,
DEC 19 1914
MAILED

Please find below a communication from the EXAMINER in charge of the application of Hudson Maxim, filed Nov. 13, 1914, Periscopes etc., Serial #871,883.

THOMAS EWING
Commissioner of Patents.

The operation of the periscope, so far as the mirror 25 is concerned is not clear. It is not seen that with the mirror 25 in the position indicated in Fig. 1, an object can be viewed properly. When the sensitive receiving surface 27 is removed from its position so that the light cones are continued past the focal plane, they will be reflected from the mirror so that only part of the peripheral rays can pass to the eye of the observer. Moreover the image will be faint due to the loss of practically all the useful rays, inverted and reduced in size as compared with a natural view.

Fig. 1 is objectionable, because it purports to show two forms of the device. If applicant intends to show the form indicated in dotted lines, a new figure should be added.

Exhibit P. 33.

The claims are drawn to different alleged inventions.

Claims 3 to 9, inclusive, and claim 11 cover a device for taking photographs.

Claims 12 and 13 cover a periscope protecting device.

It is thought that the subject matter of claims 12 and 13, involves an entirely separate feature, not in any way related to the subject matter of the other claims and division is therefore required between claims 12 and 13 and the remaining claims.

To show the state of the art the following patents are cited:

Freese et al. #521,854, June 26, 1894;
Spear, #749,755, Jan. 19, 1904;
Lake, #867,982, Oct. 15, 1907; and
Holland, #522,177, June 26, 1894;
(88—1).

L. D. UNDERWOOD,
Examiner.

[Power of Attorney]

Exhibit P. 33.

Div. 7, Room 312,
Hudson Maxim,
Serial No. 871,883,
Filed November 13, 1914,
Improvement in Periscopes.

Paper No. 3,
Responsive to Office
action of Dec. 19, 1914.

Washington, D. C.,
December 16, 1915.

Hon. Commissioner of Patents,

Sir:—

Please amend as follows:

Cancel claims 12 and 13 and insert the following claims:

A¹ per B

12. A periscopic tube adapted to be moved into and out of exposed position and provided with image-forming means, and means for exposing a sensitized surface to receive said image.

13. A periscopic tube adapted to be moved into and out of exposed position and provided with reflecting and image-forming means, means for exposing a sensitized surface to receive said image, and reflecting means for viewing said image when said last-named means are not in use.

14. In a periscope, a tube adapted to be moved into and out of exposed position, revolubly reflecting and image-forming means supported thereby, and means for exposing a sensitized surface to receive said image.

15. In a periscope, a tube adapted to be moved into and out of exposed position, revol-

Exhibit P. 33.

ably reflecting and image-forming means supported thereby, means for supporting a sensitized surface to receive said image, and reflecting means for viewing said image when said last-named means are not in use.

16. In a periscope, a sighting tube adapted to be moved into and out of sighting position, reflecting and image-forming means movable about the axis of the tube, and sensitive plate-holding means for taking impressions of the object.

17. In a periscope, a sighting tube adapted to be moved into and out of sighting position, reflecting and image-forming means movable about the axis of the tube, sensitive plate-holding means for taking impressions of the object, and means for shielding the sighting tube when not in sighting position.

Sub. B³ 7 B 18. In a periscope, a sighting tube adapted to be moved into and out of exposed position, a plurality of cir*f*umferentially facing reflecting devices, and a plurality of lenses for forming images associated with said reflecting devices and mounted to rotate axially of said tube, means for exposing a sensitized surface to said images, and reflecting means for viewing said images when said last-named means are not in use.—

REMARKS.

The official action of December 19, 1914, has been considered.

Respecting the objection to the operation of the mirror 25, it is offered in explanation that an observer looking at the mirror will see, in absence of plate holder 30, a reflected image of the real image formed by the lens. In view

of this explanation, it is believed that the objection will be waived.

In regard to the holding that claims including a protecting sleeve or member involve a separate feature, not in any way related to the subject matter of the other claims, attention is directed to Rules 41, 42 and some of the controlling decisions thereunder.

Under the provisions of Rule 41, distinct inventions dependent upon each other and mutually contributing to produce a single result may be claimed in a single application. The inventive idea presented in this case receives mechanical expression in a periscopic device which is composed of certain related elements all contributing to secure a unitary result, to wit, recording images presented to view by aid of a periscope. To secure this result certain elements are required to co-operate with each other directly or indirectly. One of these elements which materially contribute to the successful use of the instrument in connection with a submarine, is a shield of some kind for preventing clouding of the transparent surfaces, otherwise the device would soon become inoperative to perform the functions expected of it. While it may be admitted that a claim for a periscope, which includes some form of protecting element, is a distinct invention from a claim which omits this element, the two inventions are dependent upon each other and mutually contribute to produce a single result, and therefore should be permitted to be claimed together. The claims directed to the periscope camera structure and protecting means, and those directed to the periscope camera structure are related as combination and sub-combination, and in absence of

any showing that the combinations have attained a distinct status in the art, they should be permitted to be joined.

In *Ex parte* Shevill, 1902, C.D. 469, the claims were held to be for combinations and sub-combinations, and therefore division should not be required.

In *Ex parte* Davies, 1903 C.D. 280, the invention was for a mop, and included a particular pivot construction between the handle and the foot-piece of the mop, and a claim covering the particular pivot construction was held to be allowable in the same application with a claim defining the mop itself as being for a sub-combination of the combination covered by other claims for the general construction of mop-handles and wringers, and that division should not be required.

We would also call attention to the decisions of the Commissioner in *Ex parte* Woods, 13 Gour., 5-13; and *Ex parte* Purdy, 15 Gour., 35-8, where the subject matter was a fountain-pen, and the Examiner required division between claims covering a device for breaking bubbles that might form when using the pen, which was removably mounted on the end of the handle, and claims covering more or less specifically the pen point and cleaner thereof. Division was not required.

See also *Ex parte* Bell, 15 Gour., 85-11.

It is therefore submitted that claims for the periscope camera device and those for the said device associated with a protecting means be examined in the same application.

Very respectfully,

MAURO, CAMERON, LEWIS &
MASSIE.

Attorneys.

Exhibit P. 33.

DEPARTMENT OF THE INTERIOR
UNITED STATES PATENT OFFICE

Washington Feb. 9, 1916

Mauro, Cameron, Lewis & Massie,
Washington, D. C.

Please find below a communication from the EXAMINER in charge of the application of Hudson Maxim, filed Nov. 13, 1914, Periscopes or Position Finders etc., Serial No. 871,883

THOMAS EWING
Commissioner of Patents.

Case reconsidered as amended Dec. 13, 1915.

The objection to Fig. 1 is repeated.

Claim 1 is rejected on the ground that vertically movable periscopes are notoriously old and well known.

Claim 2 is rejected on the same ground. A receiving mirror is a part of every periscope and in fact is the essential element of a periscope.

Claim 3 is objected to as indefinite and inaccurate and rejected for lack of invention. Apparently applicant considers lenses 26 and the photo-sensitive plate 27 as a camera. While these elements constitute virtually a camera, the claim is indefinite, because the term "periscope" interpreted in the status of the art includes a lens or lenses for forming an image. If applicant intends to adhere to the term camera, then only so much of a periscope should be included as is necessary in cooperation with the camera. This claim is also rejected for lack of invention for this reason:

Exhibit P. 33.

There is optically no material difference between receiving an image on the retina or on a separate screen or photo-sensitive recording surface.

What can be made visible to the eye, may be recorded on a photographic plate. There is therefore no invention in providing a photographic plate in the focal plane of an optical image forming instrument. It is, moreover, old to receive an image on a screen, as shown in the patents to

Russo et al.,	(British),	2,165,	Jan.	27, 1902;	(1 sheet);
Denston	("),	10,701,	May	7, 1906;	(2 sheets);
Mangin	(French),	125,374,	June	29, 1878;	(1 sheet);
Common,	(British),	5,990,	Mar.	21, 1901;	(1 sheet);

There would certainly be no invention in substituting one form of image receiving surface for another form, in general, or a photographic plate for an image screen, such as shown in each of the references.

Claim 4 is rejected on the same ground.

Claim 5 is objected to as indefinite. The relation between the photographic surface and the receiving mirror must be qualified to state a useful combination. This claim, when properly amended, will not be considered as patentable over

Russo, above cited,

Figure 6 of Russo shows a ground glass screen in the image plane of the instrument and a viewing device including a reflector. It is thought that the conception of the idea of taking a photographic record of the image formed in the device shown is no inventive thought and the execution of this idea is obvious. It involves merely the insertion of the well known photographic slide in place of the ground glass

Exhibit P. 33.

screen. Attention is directed to the analogous use of a ground glass screen and photographic plate in the art of photography. For focusing purposes the ground glass screen is used. Then to take the picture the photographic slide is inserted in place of the ground glass screen. So far as the viewing device is concerned, the presence or absence of the ground glass is immaterial. Whether applicant uses a photographic plate and a ground glass screen alternately or uses only a photographic plate for taking the picture and uses the ocular without a ground glass screen in the image plane, is immaterial.

Claim 6 is rejected on

Neumayer et al. 829,121, Aug. 21, 1906; (88—1).

This reference shows a rotating reflector and lenses. There would be no invention in receiving the image produced, on a photographic plate.

Claim 7 is objected to as indefinite as to "rotatable lens". This claim is also met by Neumayer, above cited. Fig. 7 shows the lenses rotated together with the reflector.

Claim 8 does not involve any patentable distinction over Neumayer.

Claim 9 is rejected on

Clark 53,115, March 13, 1866; (88—1).

This reference shows a stationary lens and a vertically movable reflector. There would be no invention in using a photographic plate in connection with this device any more than with the device shown in Neumayer, or Russo. Here it may be noted that a photographic plate need not necessarily be placed in the, or on the,

Exhibit P. 33.

focal planes of the periscope, since it is obvious that a camera may be attached to the ocular of the instrument and then be taken off for purposes of observation.

Claims 10 and 11 are each rejected on Clark, above cited.

The reference shows the outer tube stationary and the inner tube or tubes raised. At present it cannot be seen that there is any difference in the operation of the devices. The difference is taken to be immaterial.

Claim 12 is rejected on the ground stated against claim 3.

Claim 13 is rejected on the ground stated against claim 5 and claim 9.

Claims 14 to 17, inclusive, are each objected to as indefinite for the reason stated against claim 7 and rejected on Neumayer. The limitation in claim 17, bottom lines, is immaterial inasmuch as it does not affect the combination of elements stated in the remainder of the claim. This claim does therefore not differ patentably from claim 16. To show, moreover, that means for shielding the sighting tube when in inoperative position are old, attention is directed to

Abbot, 467,291, Jan. 19, 1892; (88—1);

reference being had to the casing 2.

Claim 18 is rejected on the ground stated against claims 7, 14 to 17. This claim differs from the mentioned claims only in that it calls for a plurality of reflectors and a plurality of lenses. Periscopes comprising a plurality of reflectors, are old as shown in Danston and Russo, above referred to. The limitation "plurality of lenses" is immaterial. So far as the

Exhibit P. 33.

formation of images is concerned, it does not make any difference whether separate lenses are used for each reflector or only one lens system for all reflectors.

L D UNDERWOOD
Examiner.

A.B.

Paper No. 6,

Responsive to official action of February 9, 1916.

Washington, D. C.,
January 19, 1917.

Hon. Commissioner of Patents,

Sir:—

Please amend as follows:

Cancel claims 1 to 10 inclusive, and insert:

1. A periscope including a reflector and lens, and an observation mirror located out of the focal plane of said lens.

2. A periscope including a reflector, a lens, an observation mirror located out of the focal plane of said lens, and means for interposing a photo-sensitive surface in the focal plane of said lens.

3. A periscope including a reflector and a lens, an observation mirror located out of the plane of said lens, and means for interposing a photo-sensitive surface in the focal plane of said lens and between said reflector and mirror.

Exhibit P. 33.

4. A periscope including a reflector and lens, a revoluble support for the same, an observation mirror located out of the focal plane of said lens, and means for supporting a photo-sensitive surface in said focal plane.

5. A periscope comprising a vertically movable tube having glazed apertures, a sleeve movable in respect to said tube and adapted to protect said apertures, and means for limiting the movement of said sleeve in advance of the upward movement of said tube.—

Renumber claim 11 as 6, and in line 2 change "mirror" to—reflector—.

B² Cancel line 3 and insert—an observation mirror beyond the focal plane of said lens, and means adapted to support a sensitive surface between said mirror and lens.—

Cancel claims 12, 13, 14, 15, 16 and 17.

B³ Renumber claim 18 as 7 and cancel lines 5, 6, 7 and 8 thereof and insert—reflecting devices, a revoluble support for said devices, an observation mirror located beyond the common focal plane of said lenses, and means for exposing a sensitive surface in said focal plane.—

REMARKS.

The official action of February 9, 1916 has been considered.

Before final action in this case the drawing will be changed to overcome the objection repeated in the above action.

The observation mirror in combination with a periscope, as defined in claims 1 to 6, is of great importance in that it enables the observer to determine precisely when to insert the sensitized plate to take the image, and it further

Exhibit P. 33.

permits a number of observers to make observations simultaneously. This precise combination has not been shown in the citations, and it is therefore urged that claims 1 to 6 be allowed.

Claim 7 is directed to the feature of protecting the glazed surfaces in a manner also not appearing in the citations, and for this reason is believed to be patentably novel.

Favorable consideration is requested.

Respectfully,

MAURO, CAMERON, LEWIS & MASSIE.

H—ML. Attorneys.

DEPARTMENT OF THE INTERIOR
WASHINGTON 871883

Examiner Div. 7. Maxim

The examiner desires to require division between claim 5 and other claims.

This is in substance the same requirement made in first office letter and complied with by cancellation of claims 12, 13 and substitution of camera claims.

The proposed requirement is approved. Claim 5 is drawn to the device, as seen in Fig. 7 (description page 7) and recites the periscope tube A, the protective tube, apertures, & tube connections all directed to a periscope to withdraw it into the submarine body & protect the glass from water. It is immaterial to this construction whether the image be directed to a viewing plate, photographic plate or moving picture apparatus.

Exhibit P. 33.

The other claims are directed to the combinations of reflector, lenses, observation plate & photo apparatus. The former claim (5) belongs with others of its kind in Div. 22 class 114 Ships while claims 1-4 are directed to photographic apparatus (94) Div. 36 where many panoramic cameras are found. The two ideas are distinct and are embodied in distinct elements of construction.

C H PIERCE

3/7/17 L E

DEPARTMENT OF THE INTERIOR

UNITED STATES PATENT OFFICE

Washington March 8, 1917.

Mauro, Cameron, Lewis & Massie,
Washington, D. C.

Please find below a communication from the EXAMINER in charge of the application of Hudson Maxim, filed Nov. 13, 1914, Periscopes etc., Serial No. 871,883.

THOMAS EWING
Commissioner of Patents

Case reconsidered as amended Jan. 19, 1917.

Attention is again called to the criticism of Fig. 1.

Page 2, lines 2 and 3, are not clear.

Page 6, line 8 from bottom, "a" (first occurrence), should be omitted.

With regard to applicant's explanation in the second paragraph of the remarks on page 2,

of the amendment of Dec. 16, 1915, it is thought that what is seen in mirror 25 is not a reflected image of the real image formed by the lens, but a reflected image of the object as seen through the lens in just the same way as any object may be seen through any lens. If applicant's explanation were correct it would be possible to see the real image as well as the reflected image.

Claim 5 is drawn to a device as seen in Fig. 7 (description page 7) and recites the periscope tube A, the protective tube, apertures and tube connections all directed to a periscope to withdraw it into the submarine body and protect the glass from water. It is immaterial to this construction whether the image be directed to a viewing plate, photographic plate, or moving picture apparatus.

The other claims are directed to the combinations of reflector, lenses, observation plate, and photographic apparatus.

Claim 5 belongs in Division 22, class 114—Ships, while the remaining claims are directed to photographic apparatus, Class 95—Division 36, where many panoramic cameras are found. The two ideas are distinct and are embodied in distinct elements of construction.

In the first office letter division was required between claims covering a device for taking photographs, and other claims covering a periscope protecting device. This requirement for division was in effect complied with by cancellation of claims 12 and 13, and substitution of camera claims.

As indicated above the same ground for division applies between claim 5 and the remaining claims as applied when division was called for

Exhibit P. 33.

in the first office letter. This case having been submitted to the Law Examiner and approved, division is again required between claim 5 and the remaining claims.

In order to expedite the case the following proposed action on the merits is offered.

Claim 1 is rejectible on reference to Russo, of record.

Claims 2 to 4 are rejectible on the same reference in the manner explained in the concluding paragraph on the second page of the last office letter.

Claims 1 to 4 are further rejectible on reference to

781,061, Hartmann, Jan. 31, 1905; (95-47).

It would obviously not be invention to add to this patent a reflector in the manner shown by

511,133, Fretwell, Dec. 19, 1893; (95-16); or
687,592, Barnell, Nov. 26, 1901; (same class).

Attention is further called to

978,368, Grubb, Dec. 13, 1910; (88-1).

Claim 5 is rejectible as not based upon a sufficient disclosure. It is possible that it would require invention to convert the diagrammatic representation of Fig. 7 into an operative mechanical reality. This claim is further rejectible on reference to

54722, (German), Oelbermann, March 18, 1890; (Klasse 57—Photographie); (95-11).

Claim 6 is rejectible on reference to Clark, of record, in the manner already explained in the last office letter.

Exhibit P. 33.

Claim 7 is rejectible on reference to
994,935, Kleinschmidt, June 13, 1911; (95-15); or the
6,739, (British), Bachstein, of 1907; (1 sheet);

It is desired to add to the record
369,165, Connon, Aug. 30, 1887; (95-15-);
1,010,827, Rosenbaum, Sep. 15, 1914; (114-16);

the former of these having bearing upon claims 6 and 7 and the latter upon claim 5.

L D UNDERWOOD
Examiner

Exhibit P. 33.

1685

Fig. 1.

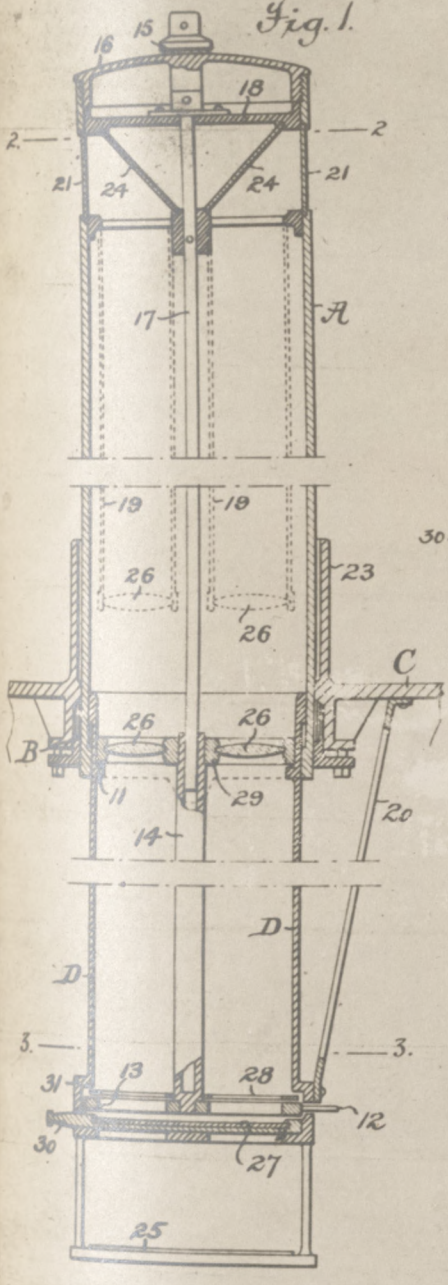

Fig. 2.

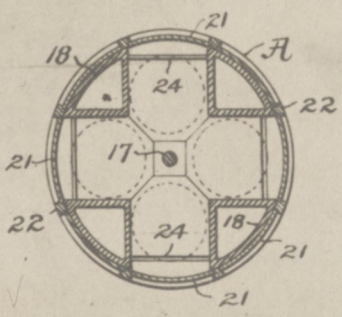

Fig. 3.

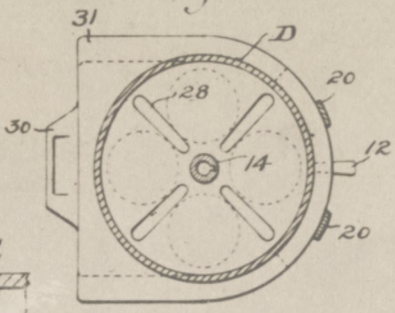

Fig. 4.

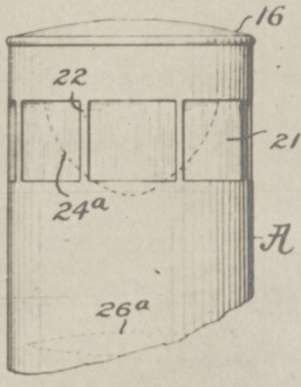

Witnesses:
Lilian Mapius.
Geo. H. Graham

Inventor
Hudson Maxim.

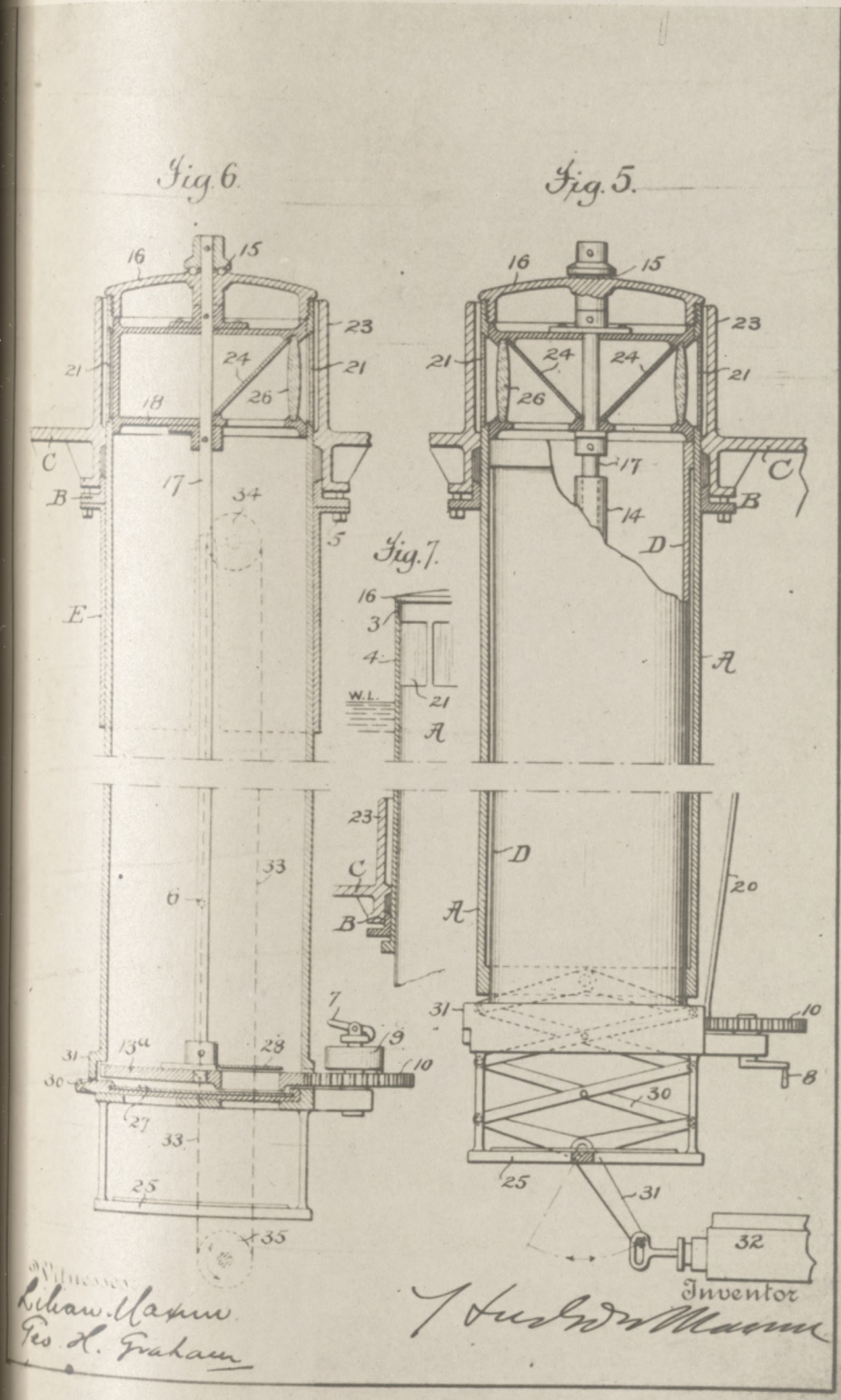
Fig. 6.
Fig. 5.
Fig. 7.
Witnesses
Inventor

Exhibit P. 34.

EXHIBIT P. 34.

DEPARTMENT OF COMMERCE

UNITED STATES PATENT OFFICE.

TO ALL PERSONS TO WHOM THESE PRESENTS SHALL COME, GREETING:

THIS IS TO CERTIFY that the annexed is a true copy from the records of this office of the File Wrapper, Contents and Drawings, in the matter of the

Abandoned Application of
HUDSON MAXIM,
Filed January 21, 1915, Serial Number 3,489,
for
Improvement in Range Finding Position.

IN TESTIMONY WHEREOF I have hereunto set my hand and caused (SEAL) the seal of the Patent Office to be affixed, at the City of Washington, this sixth day of March in the year of our Lord, one thousand nine hundred and twenty-six and of the Independence of the United States of America the one hundred and fiftieth.

THOMAS E. ROBERTSON
Commissioner of Patents.

Attest:
D. E. WILSON
Chief of Division.

[Letter of Transmittal.]

[Petition.]

Exhibit P. 34.

SPECIFICATION.

To All Whom It May Concern:

Be it known that I, Hudson Maxim, a citizen of the United States, residing in the Borough of Hopatcong, Sussex County and State of New Jersey, have invented certain new and useful improvements in Range Finding Position Indicator, of which the following is a description:

This invention relates generally to position or range finders or indicators, and particularly to means combined with a periscope or similar device for automatically indicating the position and range of the target or enemy, so that the firing control, that is to say, the direction, elevation and range of gun fire, may be determined and immediately transmitted or indicated to the gunner.

In carrying out the invention, an image of the surrounding sea or land within the circular compass of the horizon, is received upon a parabolic mirror or a number of suitable mirrors, and reflected, with preferably an intervening lens, downward upon a screen in the shape of a suitable table or mirror, positioned by a mariner's compass, that is to say, a mirror or other receiver, gyroscopically or magnetically held in a fixed position with respect to north and south.

The screen or mirror or other image-receiving device, gyroscopically or magnetically controlled, is marked or receives the reflection or imprint of marks represented by concentric circles indicating pre-determined distances from the point of observation to the horizon, and also preferably, with radial marks or lines indicating the points of the compass, with the result that when an image, such as a ship or other target, is

shown on the (screen or in the) mirror, its location as to range and direction is immediately indicated. Consequently, it having been ascertained and known what distances upon the surrounding sea or land correspond with the distances of each of the concentric circles from its centre on the gyroscopically controlled compass screen or mirror with a given height, the range or distance of any object upon the surrounding sea or land may be instantly seen and known by the position of its image upon the said screen with respect to the said circles. As many or as few of these circles may be employed as desired, so that, if, say, a circle be employed upon the screen or mirror to mark each hundred feet of distance upon the surface of the sea or land area, it would require, if the view be taken say forty odd feet above the level, five hundred and odd concentric circles to indicate ranges to a distance of ten nautical miles. If, however, the view be taken, say, fifteen to twenty feet above the level where the horizon would be five miles and a little over distant, then the concentric circles, indicating one hundred feet apart, would number, say, about two hundred and sixty odd.

The circles indicating distances farther away are, of course, placed correspondingly nearer together in proportion to their apparent positions when seen in perspective, taking into consideration the curvature of the earth.

When the improved range or position finder is employed upon fighting tops of battleships and cruisers, aeroplanes and the like, the field of vision and the apparent size of the sea or land being greater in proportion to the height, and the line of the horizon farther away, a

larger number of lines will be required to mark positions until the outside line practically coincides with the line of the horizon.

When employed on submarines, the apparent size of the sea being much less, the lines may be laid out differently, according to the demands of the case and the elevation of the mirror above sea level.

Each of the concentric range indicating circles and each of the radial compass lines appear on the mirror, so that when the image of an object like a war vessel upon the sea shows upon the gyroscopically or magnetically controlled screen or mirror, it will fall, and must fall, upon one or between adjacent concentric circles, and upon one or between adjacent radial compass lines, so that the distance and at the same time the direction will be instantly seen and determined. Consequently, it is not necessary to make any calculations in order to know both the range and direction of any target or other object upon the surface of the surrounding sea or land, and hence instant orders may be given to gunners.

In the preferred construction, the range indicating circles and the radial compass lines are each numbered or otherwise designated so that it is necessary only to communicate a certain number or numbers to the gunner or gun control, and the gunner will instantly know and be able to train his gun at exactly the right elevation, and in exactly the right direction, in order that the projectile may reach the target, or strike the vessel or other object desired.

Of course, I may employ a magnifying glass instead of a magnifying mirror screen, looking through which the image upon the screen may be magnified to any desired size. Or, I may

employ a concave or parabolic or other shaped mirror, which will so distort the image as to make the lines near the horizon appear at the same distance apart as the lines nearer to.

I may also employ distortion rectifying lenses, whereby the image upon the gyroscopically controlled screen is made to appear without distortion, as it would look to the eye seen from the fighting top or other point of observation, only on a smaller scale.

The compass positioned or controlled screen or mirror may, if need be, be adjustable toward or from the lower end of the periscope, to accord with the known height above the level of the receiving mirror. And the concentric range indicating lines with the radial compass indicating lines, may be on a screen intervening between the periscope lens and the mirror or other image-receiving device, so that such lines with the target or other image are simultaneously reflected on the mirror or such other device.

The invention will be more fully understood from a detailed description or a practical embodiment thereof, illustrated in the accompanying drawings, in which:

Figure 1, is a sectional elevation of the improvement assembled with the conning tower or compartment of a submarine.

Fig. 2, is an enlarged sectional elevation of the means for vertically moving the periscope tube into and out of operative position.

Fig. 3, is a horizontal section on the line 3, 3 of fig. 2.

Fig. 4, is a foreshortened view of the periscope tube, together with the image-receiving mirror.

Exhibit P. 34.

Fig. 5, is an enlarged plan view of the mirror with range indicating circles and the radial compass location lines.

Referring to said drawings, the submarine A, is provided with the usual conning tower or compartment B, the deck of which supports a fixed tube C, extending upwardly some distance above the submarine, passing through a suitable watertight gland D, and otherwise supported and sustained within the vessel by brackets E. In this fixed tube the periscope tube F, is mounted to freely move vertically from its down underwater position shown in full lines in Fig. 1, to its up, mirror exposed position, indicated by the dotted lines in said figure.

To stay the periscope tube when in its up position, the upper end of the tube is connected by fore and aft guy ropes *a*, connected to spring take-up drums *b*, of any suitable form, arranged when the tube is being elevated to let out the guy ropes, and when the tube is being lowered to recoil or take up the guy-ropes; to the end that when the tube is in its elevated position it will be properly stayed fore and aft. The spring drums will be such that when the tube is in its extreme high position, the guy ropes will be wholly payed out and held rigid, notwithstanding the travel of the boat under water.

The periscope tube may, however, be a fixture stayed by the guy-ropes; but it may also be arranged to be elevated to certain desired distances, as the exigencies of its use may require.

When employed in a submarine vessel, however, suitable means are provided, at the required moment, to quickly move the periscope F. to its view-taking position, and as quickly return

it to its down unexposed position; so that the periscope will be only projected above the sea when a view of the surrounding seascape is desired, and at all other times may be held below water without change of submersion of the vessel, with the result that practically no wake is formed to indicate its presence and location to the enemy.

These elevating and lowering means, in the present instance, consist of a right- and left-handed screw *d*, formed in the lower end of the periscope tube F, engaged by a rockable nut-forming stud *e*, fig. 2, carried by the rotatable hub *f*, of a worm wheel *g*, that is engaged and moved by the proper rotations of a worm *h*, driven, as and when required, say by an electric motor, not shown. The arrangement is such that when the periscope is to be elevated to view-taking position, the motor will be started, and through the worm, worm wheel, nut and screw, the periscope will be quickly elevated and as quickly returned to its normal down position, when the motor will be stopped. Of course, the screw and its nut may be arranged, so that when the periscope arrives at its elevated position a momentary dwell or lost motion may occur, so that time may be given to examine the image projected on to a receiving mirror table G, or so that a picture may be taken by a sensitized plate or film for subsequent development and record.

The receiving screen or mirror table G, may be directly supported by a gyroscopically controlled compass H, fig. 1, the mirror table forming the card; or the mirror may be otherwise supported and its north and south position maintained by a master compass. As shown in fig. 5,

the circumferential edge of the mirror may represent the horizon and the distance between the center and the several concentric lines numbered from 1 to 12 may indicate a certain ascertained number of feet or yards from the point of observation. Thus the distance from the center or point of observation to the circular line 1, would be, say, one hundred yards; to the circular line 6, six hundred yards, and so on. The radial compass indicating lines, starting from north toward the east, say, are numbered 20, 21, and so forth. So that if the target T should appear on the mirror at the position indicated in fig. 5, the only information needed to be transmitted to the gun control or gunner would be 7-23, to enable the gun to be properly trained and elevated.

It is to be understood that the circular and radial lines and their distances apart are merely illustrative of the use and mode of operation of the invention, and that the circular lines may indicate distances of feet and the radial lines indicate degrees of the circle.

What is claimed is:—

1. The herein described range finder or position and direction indicator, having means whereby points indicated upon an image of a surrounding sea or land area, the range or distance of any object may be seen and determined.

2. The herein described position and direction indicator, and range finder, whereby direction and distance is determinable by means of points of position and direction marked or indicated upon a screen, upon which an image of surrounding sea or land area is thrown.

Exhibit P. 34.

Sub A¹

3. A reflection receiving device with range or distance and direction indicating lines, whereby the location of the reflected image may be immediately determined.

4. A reflection receiving device maintained north and south, with range or distance and direction indicating lines, whereby the location of the reflected image may be immediately determined.

5. A gyroscopically controlled image receiving table having or receiving on its surface concentric range indicating circles.

6. A gyroscopically controlled mirror having concentric range indicating circles and radial compass lines.

7. A periscope combined with a reflection receiving device having or receiving range and direction indicating lines.

8. A periscope combined with a gyroscopically maintained mirror having range and direction indicating lines.

9. A vertically movable periscope combined with a mirror having intersecting lines indicating the range and position of the target.

10. A fixed guide, a periscope tube mountable therein, a receiving mirror, and means for raising and lowering the periscope tube.

11. A fixed guide, a periscope tube mounted therein, a receiving mirror, means operating in one direction for raising and lowering the tube.

12. A vertically movable periscope tube having right and left-handed screw threads and a rotatable nut embracing said tube.

13. A vertically movable periscope tube, guyropes therefor, and an image receiving device.

Exhibit P. 34.

In testimony whereof I have signed my name to this specification in the presence of two subscribing witnesses.

HUDSON MAXIM

Witnesses:
LILIAN MAXIM
GEO. H. GRAHAM

[Oath]

Div 7 Room 312 2-260 Paper No. 2

DEPARTMENT OF THE INTERIOR

UNITED STATES PATENT OFFICE

WASHINGTON Feb 12, 1915.

U. S. PATENT OFFICE
FEB 12 1915
MAILED

Hudson Maxim,
Landing,
New Jersey,

Please find below a communication from the EXAMINER in charge of the application of Hudson Maxim, filed Jan. 21, 1915, Range Finding Position, Serial No. 3, 489.

THOMAS EWING
Commissioner of Patents

The reference to a mirror as an image receiving device is not understood. It is well understood that a mirror cannot have the function of making an image visible. The screen must consist of some light diffusing material.

Exhibit P. 34.

The claims are drawn to separate and independent inventions.

Claims 1 to 10, inclusive, cover optical elements of a periscop*s*.

Claims 11 to 13 cover a specific mechanical device for raising and lowering a periscope or any other body.

Division is required between the two groups of claims.

To show the state of the art found upon a cursory search the following patents are cited:

Bedell, 1,043,562, Nov. 5, 1912;
(88—2.3);

Lake, 725,570, April 14, 1903;
(88—2.7);

L. D. UNDERWOOD
Examiner.

AB.
AB

Exhibit P. 34.

Paper No. 3

DEPARTMENT OF THE INTERIOR

UNITED STATES PATENT OFFICE

WASHINGTON May 24, 1915

U. S. PATENT OFF.
MAY 24, 1915
MAILED

Hudson Maxim
Hopatcong,
New Jersey.

Please find below a communication from the EXAMINER in charge of the application of Hudson Maxim, filed Jan. 21. 1915. Range Finding Position. Serial No. 3, 489.

THOMAS EWING.
Commissioner of Patents.

The examiner has discovered several references which may assist applicant in making his selection, namely, the patents to

Denston, (British), 10,701, May 7, 1906; (3 sheets);

Mangin, (French), 125,374, June 29 1878; (1 sheet);

(88-1);

and these references are therefore put on record.

It may be noted that this action does not extend the time within which applicant must respond and response will have to be made on or before Feb. 12, 1915.

L. D. UNDERWOOD,
Examiner.

AB.
AB

[Power of Attorney]

Exhibit P. 34.

Amendment A. Paper No. 5.

Paper No. 3,
Responsive to Office
action of February
12, 1915.

Washington, D. C.
February 4. 1916.

Hon. Commissioner of Patents,

Sir:—

Please amend as follows:

A Page 1, line 23, before "mirror" insert—screen or in the—.

Cancel claims 1, 2, 3 and 4 and substitute the following:

A' 1. In a device of the character described, the combination of sea or landscape image forming means, and a surface in the path of the image forming rays provided with range determining means.

2. In a device of the character described, the combination of sea or landscape image forming means, and a surface in the path of the image forming rays maintained in a fixed position with respect to points of the compass and provided with range and direction determining means.

3. In a device of the character described, a surface in the path of image forming rays provided with range and direction determining lines.

4. In a device of the character described, a surface in the path of image forming rays provided with range and direction determining lines, and means for maintaining the surface in a fixed position with respect to points of the compass.—

Exhibit P. 34.

REMARKS.

With a view of responding to the official requirement of division noted in Office letter of February 12, 1915, applicant elects, under *ex parte* King 90 O.G., 548, to prosecute claims 1 to 10 inclusive without at this time cancelling claims 11 to 13 held to cover an independent invention.

Action on the patentable novelty of claims 1 to 10 is requested.

Referring to the objection noted in paragraph 1 of the above Office letter, it is a fact that a mirror properly placed in the path of the image forming rays passing through the periscope reveals an image of the object from which the rays emanate. It would seem proper therefore to refer to the mirror as an image receiving device and as having the function of making the image of the object visible. If, however, more acceptable phraseology can be suggested to express the facts, the suggestion will be appreciated.

Very respectfully,

MAURO, CAMERON, LEWIS & MASSIE
Attorneys.

H-ML.

Exhibit P. 34.

Div 7 Room 312 2-260 Paper No. 6

DEPARTMENT OF THE INTERIOR
UNITED STATES PATENT OFFICE

WASHINGTON Feb 18, 1916,

Mauro, Cameron, Lewis & Massie
Washington, D. C.

Please find below a communication from the EXAMINER in charge of the application of Hudson Maxim, filed Jan. 21, 1915, Range Finding Position, Serial No. 3, 489.

THOMAS EWING
Commissioner of Patents.

Case reconsidered as amended Feb. 4, 1916

The claims are each rejected on Denston, of record. This patent shows the combination, in a periscope, of images forming means, an image receiving screen and indicia on the screen for determining the distance of objects imaged on the screen from the point of observation and for determining the position of the objects in azimuth. Attention is directed to Fig. 13 and lines 34-4, page 6.

The limitation in claims 5, 6, and 8, relating to gyroscoping means for holding the screen stationary in azimuth does not patentably distinguish the claim over the reference, for the reason that, so far as the combination of elements goes, it is immaterial by what specific means the screen is held stationary.

There is furthermore no invention in substituting the secondary power derived from a master

Exhibit P. 34.

compass for the primary magnetic force employed in the reference for establishing the relation in azimuth. It is not understood that applicant makes any claim to the gyroscopic control of a pelorus or azimuth dial and the incorporation of such control in a device, such as shown in Denston, in merely the logical and natural development of the art.

L. D. UNDERWOOD.
Examiner.

Application 3,489——1

Exhibit P. 34.

145
108

Fig. 1.

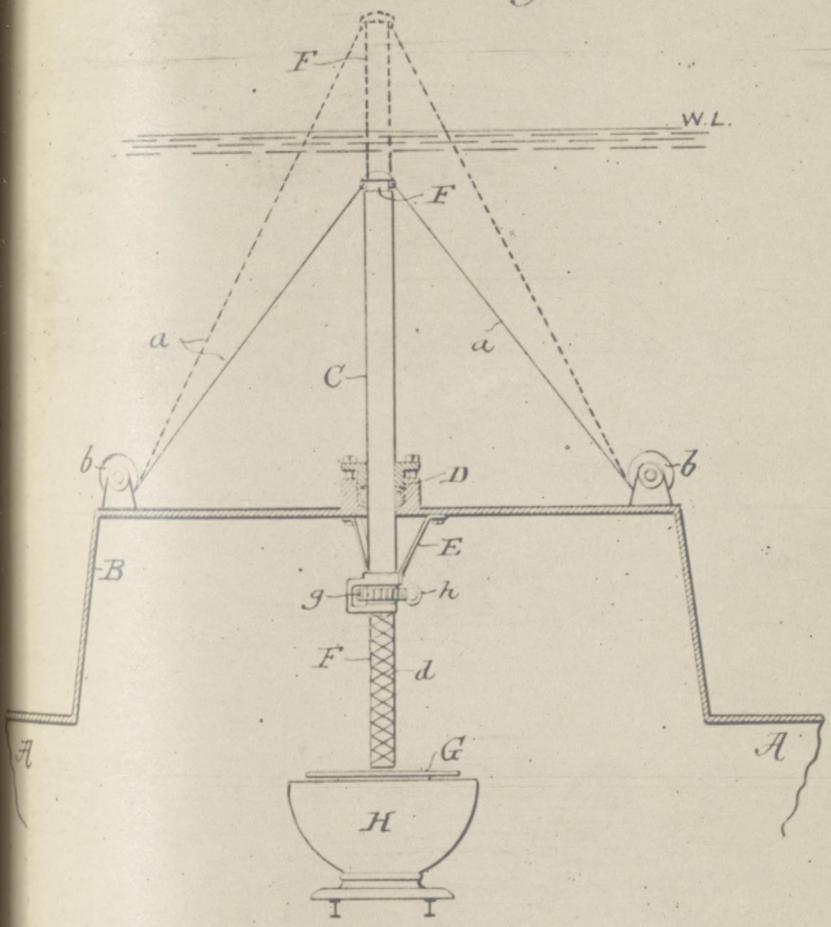

Witnesses:
Chas. Maxim
Jno. H. Graham

Inventor
Hudson Maxim

Exhibit P. 34.

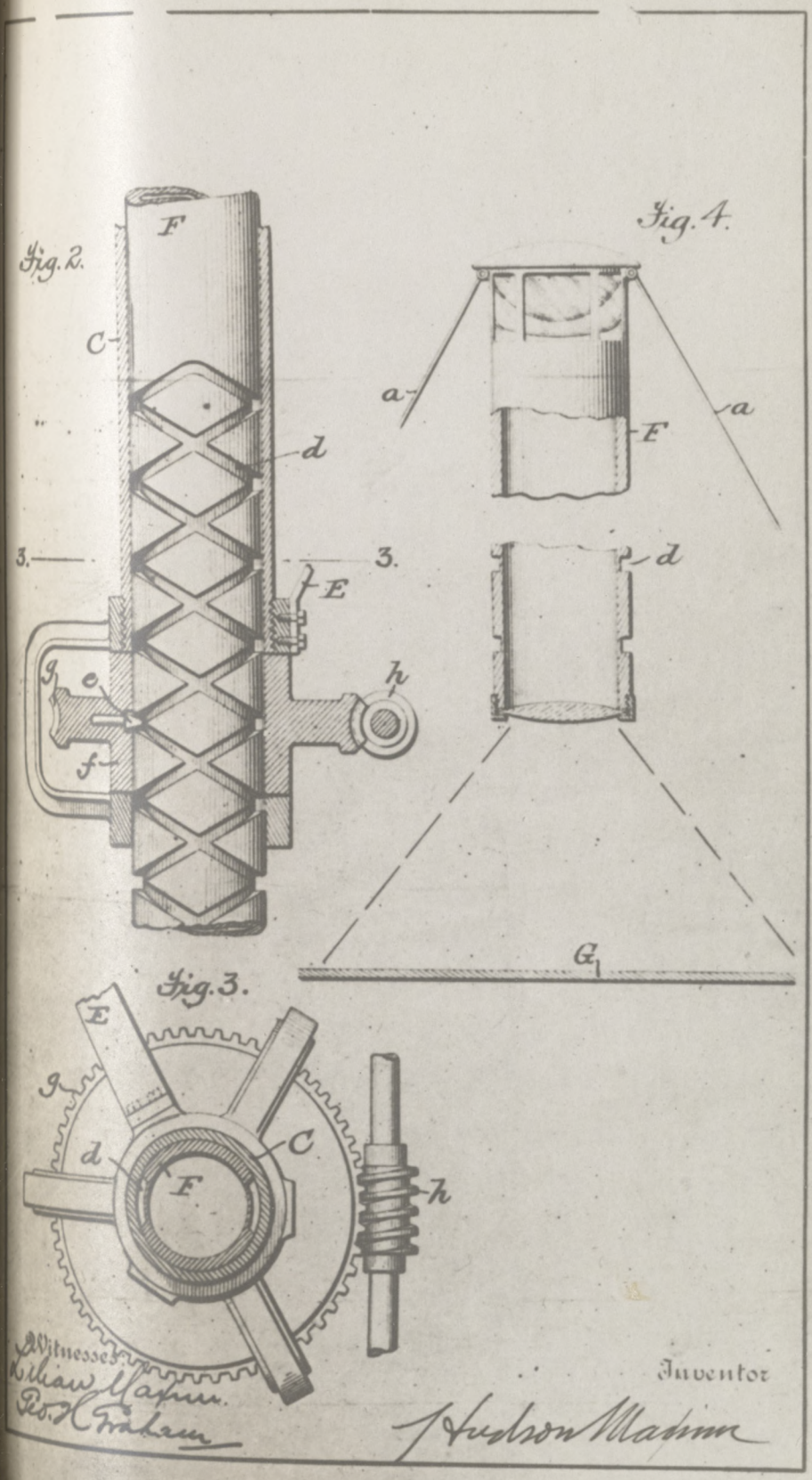
Fig. 2.
F
C
d
3.
3.
E
g
e
f
h
Fig. 4.
a
a
F
d
G
Fig. 3.
E
g
d
C
F
h
Witnesses:
Lilian Maxim.
Geo. H. Graham
Inventor
Hudson Maxim

Exhibit P. 34.

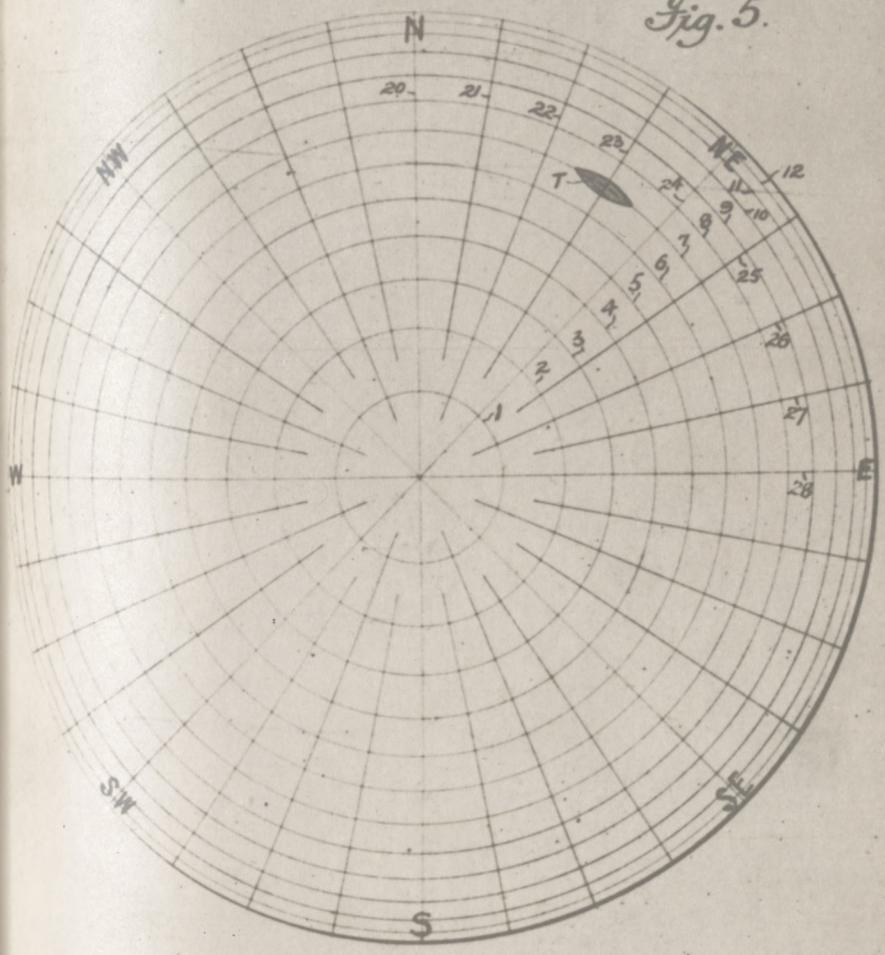

Fig. 5.

Witnesses:
Hiram Maxim
Fred C. Graham

Inventor
Hudson Maxim

Exhibit P. 34.

EXHIBIT P. 35.

[Various original stock transfer sheets taken from records of United States Corporation Company, Transfer Agent for Maxim Munitions Corporation, showing, among others, the following facts:]

(1) Certificates designated as "Original Issue" (the transfer sheets bearing the appropriate cancelled Internal Revenue documentary stamps) were issued on the dates, in the names and for the number of shares, respectively, hereinbelow set forth, to-wit:

DATE OF ISSUE	NAME IN WHICH ISSUED	NO. OF SHARES
1915		
Aug. 27	B. F. Taylor	3
" 27	J. H. Brown	3
" 27	Laurance Angel	3
" 27	Hudson Maxim	3
" 27	Wm. A. Scully	3
" 27	Edw. H. Beckert	3
" 27	Robert Sweeny	3
" 27	Winfield P. Porter	3
Sept. 9	Hudson Maxim	93,996
" 9	Edward Purcell	5,000
" 9	Edwin Packard	45,000
Oct. 15	M. F. Burns	10,000
" 21	William A. Scully	20,000
" 23	Robert E. Crane	7,750
Nov. 1	Robert E. Crane	5,000
" 10	Edward H. Beckert	70,000
" 10	Laurance Angel	35,000
" 10	Benj. F. Taylor, Asst. Treas.	300,000
" 10	Robert Sweeny	408,230
	Total	1,000,000

Exhibit P. 35.

(2) A total of 102,000 shares was transferred as follows:

DATE OF TRANSFER	NAME FROM WHICH TRANSFERRED	NAME INTO WHICH TRANSFERRED	NO. OF SHARES
1917			
June 4	Robert Sweeny	H. Content & Co.	10,000
" 8	" "	" " " "	10,000
" 11	" "	" " " "	20,000
" 13	" "	" " " "	10,000
" 15	" "	" " " "	8,000
" "	Edward H. Beckert	" " " "	2,000
" 20	Robert Sweeny	" " " "	10,000
" 25	" "	H. P. Armstrong & Co.	5,000
" "	" "	H. Content & Co.	10,000
" 27	" "	" " " "	17,000
		Total	102,000

All of said 102,000 shares were part of the shares the certificates for which were originally issued in the name of either said Sweeny or said Beckert as hereinabove mentioned.

(3) A total of 102,000 shares was transferred as follows:

DATE OF TRANSFER	NAME FROM WHICH TRANSFERRED	NAME INTO WHICH TRANSFERRED	NO. OF SHARES
1917			
July 10	Robert Sweeny	H. Content & Co.	10,000
" "	" "	" " " "	40,000
" 16	" "	E. J. & J. W. Raleigh.	10,000
" "	" "	H. Content & Co.	40,000
" 23	Edwin Packard	" " " "	2,000
		Total	102,000

All of said 102,000 shares were part of the shares the certificates for which were originally issued in the name of either said Sweeny or said Packard as hereinabove mentioned.

Exhibit P. 35.

(4) A total of 100,000 shares was transferred as follows:

DATE OF TRANSFER	NAME FROM WHICH TRANSFERRED	NAME INTO WHICH TRANSFERRED	NO. OF SHARES
1917			
July 25	Edward H. Beckert	G. Jason Waters.....	47,500
" 31	Robert Sweeny	" " "	52,500
		Total.....	100,000

All of said 100,000 shares were part of the shares the certificates for which were originally issued in the name of either said Beckert or said Sweeny as hereinabove mentioned.

(5) A total of 87,053 shares was transferred as follows:

DATE OF TRANSFER	NAME FROM WHICH TRANSFERRED	NAME INTO WHICH TRANSFERRED	NO. OF SHARES
1917			
Aug. 16	J. Campbell Thompson, Trustee	H. Content & Co.....	54,446
" "	J. Campbell Thompson, Trustee	" " " "	27,023
" "	J. Campbell Thompson	" " " "	14
" "	Edwin Packard	" " " "	5,000
" "	William A. Scully	" " " "	200
" "	" " "	" " " "	50
" 23	Hudson Maxim	" " " "	320
		Total.....	87,053

Of said 87,053 shares, 81,483 shares had been transferred previously as follows:

DATE OF TRANSFER	NAME FROM WHICH TRANSFERRED	NAME INTO WHICH TRANSFERRED	NO. OF SHARES
1916			
Nov. 25	Robert Sweeny	J. Campbell Thompson, Trustee	54,446
1917			
May 16	B. F. Taylor, Asst. Treas.	J. Campbell Thompson	14
July 27	Robert Sweeny	J. Campbell Thompson, Trustee	27,023
		Total.....	81,483

Exhibit P. 35.

All of said 87,053 shares were part of the shares the certificates for which were originally issued in the name of either said Maxim or said Scully or said Packard or said Sweeny or said B. F. Taylor, Assistant Treasurer, as hereinabove mentioned.

(6) A total of 93,447 shares was transferred as follows:

DATE OF TRANSFER	NAME FROM WHICH TRANSFERRED	NAME INTO WHICH TRANSFERRED	NO. OF SHARES
1917			
Aug. 23	Hudson Maxim	George Gault Bourne.	1,913
" "	" "	Milton J. Budlong....	1,913
" "	" "	Mrs. L. D. Burkhardt.	192
" "	" "	M. F. Burns.....	4,500
" "	" "	H. R. Remsen Coles..	96
" "	" "	Mrs. M. D. Coles.....	96
" "	" "	Everly M. Davis and Joseph A. Durkin..	17,363
" "	" "	Herbert Lowell Dillon	2,869
" "	" "	Christian Fleissner...	957
" "	" "	George A. Gaston....	1,913
" "	" "	Carlisle J. Gleason...	5,738
" "	" "	Godfrey and Warner..	3,825
" "	" "	Nathan A. Gros.....	957
" "	" "	James B. Higgins....	8
" "	" "	Adon J. Hoffman.....	956
" "	" "	William T. Koch.....	1,913
" "	" "	William J. Maloney...	1,913
" "	" "	John W. O'Bannon...	18,892
" "	" "	Esmond P. O'Brien...	3,443
" "	" "	Otto H. Oppenheimer.	956
" "	" "	Edwin Packard.....	6,374
" "	" "	Charles H. Sabin.....	1,913
" "	" "	George W. Sanborn...	1,913
" "	" "	Julius Siegbert.....	1,148
" "	" "	Teresa Sweeny.....	282
" "	" "	J. Campbell Thompson	565
" "	" "	J. M. Townley.....	3,188
" "	" "	J. A. Wigmore.....	1,913
" "	" "	William H. Williams.	1,913
" "	" "	Charles A. Wimpfheimer	3,825
		Total.....	93,447

Exhibit P. 35.

All of said 93,447 shares were part of the shares the certificate for which was originally issued in the name of said Maxim as hereinabove mentioned.

(7) A total of 25,500 shares was transferred as follows:

DATE OF TRANSFER	NAME FROM WHICH TRANSFERRED	NAME INTO WHICH TRANSFERRED	NO. OF SHARES
1917			
June 21	Edwin Packard	James O'Brien & Co...	5,000
" 22	" "	H. P. Armstrong & Co.	5,000
" "	Edward H. Beckert	" " " "	2,000
" "	Edwin Packard	" " " "	2,000
" "	William A. Scully	" " " "	400
" "	" " "	" " " "	600
July 25	Edward H. Beckert	H. Content & Co.....	10,200
Sept. 29	William A. Scully	" " " "	300
		Total.....	25,500

All of said 25,500 shares were part of the shares the certificates for which were originally issued in the name of either said Packard or said Beckert or said Scully as hereinabove mentioned.

(8) The 957 shares transferred into the name of Christian Fleissner out of the name of Hudson Maxim, as above set forth, were represented by certificate No. 8,612.

Exhibit P. 35.

(9) Besides the 957 shares above mentioned, 2,000 shares were transferred into and out of the name of Christian Fleissner as follows:

DATE OF TRANSFER	NAME FROM WHICH TRANSFERRED	NAME INTO WHICH TRANSFERRED	NO. OF SHARES
1916			
July 19	B. F. Taylor, Asst. Treas.	Christian Fleissner...	1,000
Sept. 7	Christian Fleissner	Post & Flagg.....	200
Oct. 10	" "	" " "	600
" "	" "	" " "	200
Nov. 29	B. F. Taylor, Asst. Treas.	Christian Fleissner...	1,000
1917			
June 21	Christian Fleissner	W. R. Smith.....	1,000

All of said 2,000 shares so transferred into the name of Christian Fleissner were part of the shares the certificate for which was originally issued in the name of said B. F. Taylor, Assistant Treasurer.

The address of Christian Fleissner, as stated on the transfer sheet recording the transfer of 1,000 shares into the name of Christian Fleissner on July 19, 1916, was 121 New Jersey Railroad Ave., Newark, N. J.

Exhibit P. 36.

No. 8612

SHARES $10 EACH ~~1957~~ 957 Shares

Maxim Munitions Corporation

Incorporated Under the Laws of the State of Delaware

Capital Stock $10,000,000

CANCELLED
DATE OCT 30 1917
BY
UNITED STATES CORPORATION COMPANY
ENTERED

THIS IS TO CERTIFY that Christian Pleissner

is the owner of Nine hundred fifty-seven fully-paid and non-assessable shares of the capital stock of **Maxim Munitions Corporation,** transferable only on the books of the Corporation by the holder thereof in person or by duly authorized attorney upon surrender of this certificate properly endorsed.

WITNESS the seal of the Corporation and the signatures of its duly authorized officers affixed this AUG 23 1917

CANCELLED OCT 30 1917 UNITED STATES CORPORATION COMPANY

United States Corporation Company, Transfer Agent and Registrar.
AUG 23 1917
By
Asst. Secretary

Asst. Secretary Vice-President.

EXHIBIT P. 36.

EXHIBIT P. 36.

SEP 21 1917

DATE OF TRADE.....

TELEPHONES: BROAD 6951-2-3-4-5-6

E. BUNGE & CO.

44 BROAD STREET

NO. 3194

C. W. Halsey & Co NEW YORK, SEP 25 1917 191

SOLD TO ~~Bluett Hollins~~ 15 Bd

1000 Maxim 1/8 1125—

17 Do.

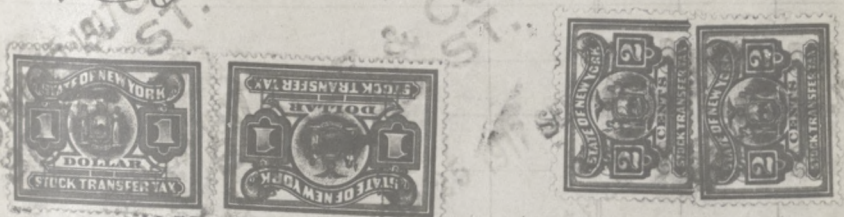

EXHIBIT P. 36.

EXHIBIT P. 36.

10 X 100

1 X 17

For Value Received, _____ hereby sell, assign and transfer

unto H Content & Co

_____

_____

_____ Shares

of the Capital Stock represented by the within Certificate, and do hereby irrevocably constitute and appoint

_____ Attorney,

to transfer the said stock on the books of the within named Corporation, with full power of substitution in the premises.

Sept. 24, 197

Christian Fleissner

ence of:

Geo. J. Soden

H Content & Co

NOTICE: The signature to this assignment must correspond with the name as written upon the face of the Certificate, in every part[illegible]lar, wit[illegible]t alteration [illegible]nlargement, or any [illegible]ge whate[illegible].

TAX STAMPS ON CERTIFICATE No.

8613

EXHIBIT P. 36.

Exhibit P. 37.

EXHIBIT P. 37.

ESCROW AGREEMENT.

AGREEMENT made November 17th, 1915, by and between MAXIM MUNITIONS CORPORATION, of the first part, hereinafter called the "Corporation"; the undersigned subscribers, stockholders or entitled to stock of said "Corporation" to the amount set opposite our respective signatures, parties of the second part, hereinafter called the "Stockholders", and CARLOS E. MOORE and JAMES S. ALCORN, of the third part, hereinafter called the "Managers",

WITNESSETH:

WHEREAS, the said "Corporation" has in its treasury three hundred thousand (300,000) shares of its stock, of the par value of ten dollars ($10.) per share, which was issued full paid and nonassessable and was returned to its treasury to be disposed of for the corporate purposes of the "Corporation", and the subscribers are the owners of seven hundred thousand (700,000) shares of the capital stock of the "Corporation" of the par value of ten dollars ($10.) per share, issued full paid and nonassessable; and

WHEREAS, the said "Corporation" and the said "Managers" did on November 9th 1915, enter into an agreement, dated on said day, for the sale of certain stock of the party of the first part, in which agreement it was provided that the entire stock of the "Corporation" should be deposited in escrow with the United States Mortgage and Trust Company of the City of New York, pursuant to certain conditions therein set forth;

Exhibit P. 37.

Now, THEREFORE, in consideration of the premises, and of the mutual promises hereinafter set forth, and further of the sum of One Dollar ($1.) each to the other paid, the receipt whereof is hereby acknowledged, it is hereby mutually agreed by and between the parties hereto:

FIRST: That the entire capital stock of the party of the first part, aggregating one million (1,000,000) shares of the par value of ten dollars ($10.) per share, issued full paid and nonassessable, including the shares now in the "Corporation's" treasury, as well as the stock owned by the "Subscribers" shall be deposited in escrow with the United States Mortgage and Trust Company on or before November 17th 1915, subject to the following terms and conditions, which are hereby agreed to by all of the parties hereto, and which shall govern and guide the said Trust Company in the fulfillment of the conditions of said escrow, and which shall be its sole and only authority therefor, unless mutually modified as hereinafter provided:

(a) Two hundred thousand (200,000) shares thereof shall be delivered from time to time to Carlos E. Moore, of the Borough of Manhattan, City of New York, and James S. Alcorn of Philadelphia, Pennsylvania, jointly, or upon their joint order, upon payment therefor to the United States Mortgage and Trust Company for account of the "Corporation" in cash at the rate of five dollars ($5.) per share, payment to be made within the following periods:—

* * * * * *

FIFTH: All shares of stock deposited under the terms of paragraph (a) hereof, shall be endorsed in blank, so as to be negotiable by delivery.

Exhibit P. 37.

SIXTH: Any of the parties hereto of the second part may from time to time by mutual agreement with the "Managers" jointly, modify or change the terms hereof applicable to such party of the second part, and in such event, upon a copy of said agreement being lodged with the Trust Company, it shall deliver the stock of such party of the second part in accordance with the terms of such modifying agreement.

SEVENTH: This agreement shall be binding upon the parties hereto, their respective successors, heirs, administrators and assigns.

IN TESTIMONY WHEREOF, the MAXIM MUNITIONS CORPORATION has caused these presents to be signed by its duly authorized officers and its seal to be hereunto affixed and the other parties hereto have hereunto affixed their hands and seals the day and year first aforesaid.

Signed, sealed and delivered by
MAXIM MUNITIONS CORPORATION,
in the presence of:
S. E. FRUCHTER

MAXIM MUNITIONS
CORPORATION
By ROBERT SWEENY
Vice President.

[CORPORATE SEAL]

Attest:

B. F. TAYLOR
Assistant Secretary.

Exhibit P. 37.

JAMES S. ALCORN

In the presence of: CARLOS E. MOORE
S. E. FRUCHTER.

No. of Shares.		
426,004	ROBERT SWEENY	Seal.
#108		
93,996	HUDSON MAXIM	Seal.
#314		
70,000	EDWARD BECKERT	Seal.
#315		
35,000	LAURANCE ANGEL	Seal.
#110/149	EDW. PURCELL	
5,000	by EDWIN PACKARD	Seal.
#151 to 155		
#157/161		
40,000	EDWIN PACKARD	Seal.
316/317		
300,000	B. F. TAYLOR, Asst. Treas.	Seal.

Maxim Munitions Corp.

[Assignment by Carlos E. Moore to B. F. Taylor, dated November 19, 1915, to take effect November 20, 1915.]

[Consent, dated November 20, 1915, to assignment by Taylor to Alcorn, executed by all parties to agreement of November 17, 1915.]

Exhibit P. 38.

EXHIBIT P. 38.

THIS AGREEMENT, made and entered into this 22nd day of June, 1916, by and between BENJAMIN F. TAYLOR, of the City of New York, party of the first part, hereinafter called "Syndicate Manager," and the Subscribers hereto severally, parties of the second part, each of whom is hereinafter referred to as "Subscribers," and all of whom together with the Syndicate Manager constitute the Syndicate and the MAXIM MUNITIONS CORPORATION, a corporation organized and existing under the laws of the State of Delaware, with an office in the City of New York,

WITNESSETH:

WHEREAS, on or about the 24th day of August, 1915, the MAXIM MUNITIONS CORPORATION, whose office is at No. 120 Broadway, New York City, was duly organized under the laws of the State of Delaware, with a capital stock of Ten Million Dollars ($10,000,000), all common, divided into One million (1,000,000) shares of the par value of Ten Dollars ($10.) each, and

WHEREAS, the said corporation duly obtained from the Secretary of State, New York, authority to do business within the State of New York, and the said corporation began business in the City of New York, and

WHEREAS, the said MAXIM MUNITIONS CORPORATION acquired in the City of New Haven and suburbs, in the State of Connecticut, three plants known respectively as the "Fuller Plant," "Seward Plant" and "Secor Plant," the title thereto being vested in the said MAXIM MUNITIONS CORPORATION, upon which substantial amounts have been paid on account of the purchase price thereof, and

Exhibit P. 38.

WHEREAS, on or about the 15th day of November, 1915, the said MAXIM MUNITIONS CORPORATION entered into a contract with the Danish Government for Thirty Million (30,000,000) cartridges against which an established credit was fixed by the said Danish Government with the National City Bank of the City of New York, and in addition thereto a payment of Three hundred and forty-five thousand Dollars ($345,000) was made available to the MAXIM MUNITIONS CORPORATION for the purpose of purchasing materials in connection with the said contract, and

WHEREAS, on the 19th day of April, the MAXIM MUNITIONS CORPORATION entered into a certain contract with the NEW ENGLAND WESTINGHOUSE COMPANY, for the manufacture of bayonets for the Company, to be employed by it in filling an order of the Russian Government, aggregating the sum of Six hundred and twenty-five thousand Dollars ($625,000), and

WHEREAS, Ninety-nine thousand, one hundred thirty-five (99,135) shares of the stock of the said MAXIM MUNITIONS CORPORATION were turned over to J. ROBINSON-DUFF and J. ROBINSON-DUFF & Co., his successors in business and members of the New York Stock Exchange, and placed by them on the curb market and dealt in and is now selling for about Seven Dollars ($7.) per share, and

WHEREAS, there is now held by the MAXIM MUNITIONS CORPORATION as Treasury Stock Two hundred thousand, eight hundred sixty-five (200,865) shares, and there is in escrow Six hundred sixty-six thousand (666,000) shares not available for sale and One hundred thirty-three

Exhibit P. 38.

thousand, one hundred thirty-five (*33*,135) shares outstanding, and

WHEREAS, the said MAXIM MUNITIONS CORPORATION has installed a large amount of valuable machinery in its several plants above mentioned, of the latest and most approved type and suitable for the manufacture of cartridges, bayonets and other war munitions, and has acquired large quantities of materials for the manufacture of cartridges and arranged for all the material necessary to fill the order above mentioned, and

WHEREAS, the said MAXIM MUNITIONS CORPORATION is about to begin deliveries of cartridges and bayonets upon the above mentioned orders, which deliveries will result in large returns to the corporation within thirty to sixty days, and

WHEREAS, it is the desire of the MAXIM MUNITIONS CORPORATION to dispose of forty thousand (40,000) shares of its treasury stock to efficiently handle the contracts in hand, arrange for the handling of other large contracts for which it is now negotiating and which the corporation expects to secure in the very near future, and

WHEREAS, all of the money received from the sale of the said treasury stock is to be placed in the treasury of the corporation for this purpose and none other, and the corporation shall receive the full benefit therefrom,

NOW, THEREFORE, in consideration of the premises and the sum of One Dollar by each of the parties hereto to the others in hand paid, the receipt whereof is hereby acknowledged, the Subscribers hereto agree with one another and with the Syndicate Manager and the MAXIM MUNITIONS CORPORATION, as follows:—

(1) The Subscribers hereby form a syndicate for the purpose of purchasing from the MAXIM

Exhibit P. 38.

MUNITIONS CORPORATION forty thousand (40,000) shares of its treasury stock at Five Dollars ($5.00) per share, the Subscribers to take the number of shares set opposite their respective names.

(2) The Subscribers shall pay for the said stock Fifty per cent. (50%) of the price thereof upon notice from the Syndicate Manager of the completion of the underwriting, for which the Syndicate Manager's receipt shall be given and the remaining Fifty per cent. (50%) fifteen (15) days from the completion of the underwriting, whereupon the Subscribers shall receive final stock certificate for the amount of their subscriptions.

(3) The Subscribers may hold the stock as an investment, or if the stock be offered for sale by the said Subscribers any time within one year it shall first be offered through the Syndicate Manager in blocks of not more than Five thousand (5,000) shares to the Corporation's brokers, J. ROBINSON-DUFF & Co., Bankers and Brokers, No. 61 Broadway, New York City, and in the event that no trade can be made with J. ROBINSON DUFF & Co. on the said stock so offered, then and in that event the Subscribers may at their option offer the stock through any other broker or individual. It is understood and agreed that in case a number of Subscribers offer at the same time stock aggregating more than Five thousand (5,000) shares, pro rata portions of the stock so offered by the several Subscribers respectively shall be used to make up blocks of Five thousand (5,000) shares to be offered as aforesaid.

(4) All of the money received from the sale of the said treasury stock shall be placed in

Exhibit P. 38.

the Treasury of the corporation for treasury purposes and none other, and the corporation shall receive the full benefit therefrom.

(5) This agreement shall bind the parties hereto from the dates of the signing thereof by the parties respectively, provided all of the forty thousand (40,000) shares of stock be subscribed on or before the twenty-second day of July, 1916, and in the event that all of the said stock shall not have been so subscribed on or before such date, this agreement shall be and be construed to be null and void, and no liability or rights shall accrue hereunder.

(6) Nothing contained in this agreement or otherwise shall constitute the subscribers partners with or agents for one another or with or for the Syndicate Manager.

(7) This agreement shall be in all things binding upon and inure to the benefit of the heirs, executors, administrators, successors and assigns of the parties hereto.

In Witness Whereof, the Maxim Munitions Corporation has caused these presents to be executed by its proper officers duly authorized thereunto and the Syndicate Manager and the Subscribers have subscribed this agreement on and after the day and year first above written.

MAXIM MUNITIONS
CORPORATION.

By J. W. O'Bannon
President

Benjamin F. Taylor
Syndicate Manager.

Exhibit P. 38.

Name Address	Number of Shares	Amount
J. W. O'Bannon, 120 Bway. New York	8000	$40,000
Esmond P. O'Brien, N. Y. C.	2000	10,000
F. D. Ross Detroit, M.	300	1,500
Chas. A. Wimplheimer, #460-4th Ave. New York	2000	10,000
Jan. Burian, 460 Fourth Ave. New York	300	1,500
N. A. Gros, 20 Elinor Place, Yonkers, N. Y.	300	1,500
J. K. Rogers, Wilmington, Del.	500	2,500
C. H. Lathman, Norwich, N. Y.	600	3,000
George W. Sanborn, Utica, N. Y.	1000	5,000
F. H. Diehl, Detroit, Mich.	1000	5,000
Morgan J. O'Brien	1000	5,000
George Gault Bourne, 85 Liberty St. NY	2000	10,000
J. Campbell Thompson, N. Y.	1000	5,000
Henry Searing, 72 Leonard St., NY	500	2,500
Israel Mendelson, 19 E. 24th St.	1000	5,000
Julius Siegbert, 900 Bway	500	2,500
Robert B. Brown, Colo Bldg., Wash'n DC	1000	5,000
E. B. McConnell, 100 Wm. St. NY	1000	5,000
Christian Fleissner, 121 New Jersey Railroad Avenue, Newark, N. J.	1000	5,000
Ambrose F. McCabe, 55 Liberty St.	1000	5,000
Otto H. Oppenheimer, 382 Freylinghausen Ave., Newark, N. J.	1000	5,000
Percy Heineman, 247 Church St.	500	2,500
M. O. Garner, 63 Wall St., N. Y.	1000	5,000
L. D. Burkhardt, 63 Wall St., N. Y.	1000	5,000
Geo. J. Soden, 120 Broadway, N. Y.	300	1,500
J. G. Smith, 225 Fifth Ave. N. Y.	2000	10,000
John McE. Bowman, Biltmore	1000	5,000
Sam'l. Zucker, 715 Bway., N. Y.	500	2,500
Wm. P. Maloney, 41 Wall St.	1000	5,000
S. R. Munson, 155 Townsend Ave., New Haven, Conn.	1000	5,000
Herbert E. Dickson, 301 W. 108th St. N. Y. C.	500	2,500
Joseph H. Austin, 28 East Woodbridge, Detroit, M.	200	1,000
William T. Koch, c/o Koch Dept. Store 125th St., New York	1000	5,000
Laurence Angel, 120 Broadway	3000	15,000
	40,000	200,000

NAME

Christian Fleissner

ADDRESS

121 New Jersey Railroad Ave.,

Newark, N. J.

COMMON

DATE	FOLIO	CERTIFICATES	DR.	CR.	CR. BALANCE
1916		~~3900~~ ~~51~~ ~~52~~ ~~53~~ ~~54~~			
July 19	221			1000	
Sept 7	739		200		800
Oct. 10	754		800		0
Nov 29	300	~~53~~ ~~54~~ ~~55~~ ~~56~~ ~~57~~ ~~58~~ ~~59~~ ~~60~~			
1917		~~61~~ ~~60~~		1000	1000
June 21	515		1000		0

FORWARD

PREFERRED

DATE	FOLIO	CERTIFICATES	DR.	CR.	CR. BALANCE

FORWARD

EXHIBIT P. 39.

Exhibit P. 39.

Exhibit P. 40.

EXHIBIT P. 40.

J. Campbell Thompson
Counsellor at Law

Sixty-Three Wall Street,
New York City.

Received from Otto H. Oppenheimer, one escrow Maxim Munitions Corporation certificate standing in the name of Theo D. Palmer for 12750 shares and with assignment endorsed in back thereof by Mr. Palmer to Christian Fleissner and Otto H. Oppenheimer.

(Signed) J. CAMPBELL THOMPSON
per B

Dec. 7/16

Exhibit P. 41.

EXHIBIT P. 41.

New York, February 19, 1917.

J. Campbell Thompson, Esq., Trustee,
63 Wall Street,
New York City.

Dear Sir,—

In consideration of the acceptance by Messrs. Everly M. Davis and Joseph A. Durkin of a certain proposition to be made to them to become directors, officers and actively interested in the Maxim Munitions Corporation, we, the undersigned, hereby authorize and empower you to hold for their account and benefit and to be issued to them, when the stock is released, one-half of the stock of the said Maxim Munitions Corporation which you hold for our account in accordance with a certain Syndicate Agreement, dated February 10, 1916, and signed by the respective members of the said Syndicate: it being understood that the said stock so held for the account and benefit of Messrs. Davis & Durkin is to be held subject to the same conditions and released when and under the same conditions as our stock is to be held and released to us.

It is understood and agreed that this agreement is effective only when all the original subscribers to the Syndicate Agreement dated February 10th, 1916, have signed.

Exhibit P. 41.

	Name	Address
$50,000.00	J. W. O'Bannon	120 Broadway, New York
29,000.00	Esmond P. O'Brien	120 Broadway, N. Y. C.
		C. Fleissner
2,500.00	Christian Fleissner	121 New Jersey Railroad Ave. Newark, N. J.
5,000.00	Geo. W. Sanborn	Utica, N. Y.
2,500.00	J. B. Spencer	Syracuse, N. Y.
5,000.00	J. Campbell Thompson	63 Wall Street, N. Y.
	As Atty. for a client J. J. G.	
$15,000.00	Carlisle J. Gleason	111 Broadway, N. Y. City
7,500.00	Herbert Lowell Dillon	71 Broadway
10,000.00	Chas. A. Wimpfheimer	450/460 Fourth Avenue
3,000.00	Julius Siegbert	900 B'way
5,000.00	W. P. Maloney	41 Wall
2,500.00	Otto H. Oppenheimer	Newark, N. J.
	Otto H. Oppenheimer	
	Robert Sweeny	120 Broadway
5,000.00	J. Campbell Thompson	63 Wall St. N. Y.
	As Atty. for a client (C. L. W.)	
2,500.00	A. J. Hoffman	Syracuse, N. Y.
	By J. W. O'Bannon Atty. in fact	
5,000.00	William T. Koch	132 W. 125 St.
	Teresa H. Sweeny	
25,000.00	Gaston, Williams & Wigmore, Inc.	
	By R. M. Lee Martin	
	Secretary.	
3,000.00	Samuel Zucker	
	Nathan A. Gros	
	Edwin Packard	
	J. M. Townley	
	Benjamin F. Taylor Syndicate Manager	
	James S. Laing Trustee	

EXHIBIT P. 42.

Messrs. Everly M. Davis, Joseph A. Durkin and J. W. O'Bannon having offered to donate to the treasury of the Maxim Munitions Corporation one hundred thousand (100,000) shares of their holdings of the stock of the Corporation now in the hands of J. Campbell Thompson, 63 Wall Street, New York City, as Trustee for a certain syndicate created under and by virtue of a syndicate agreement dated February 10, 1916, the said offer to donate the said stock being subject to the consent of all of the original signers of the said syndicate agreement, we the undersigned members of the said syndicate hereby for ourselves, our executors, administrators, successors and assigns consent to the donation to the treasury of the Maxim Munitions Corporation by Messrs. Davis, Durkin and O'Bannon the said one hundred thousand (100,000) shares of stock of the Corporation now in the hands of the said J. Campbell Thompson as Trustee, the said stock so donated to be used for treasury purposes to promote the interests of the Corporation.

The said J. Campbell Thompson as Trustee, is hereby authorized, empowered and directed to deliver to the said Maxim Munitions Corporation said one hundred thousand (100,000) shares of stock donated as aforesaid by Messrs. Davis, Durkin and O'Bannon to the treasury of the said Corporation upon demand of J. W. O'Bannon, President of the Corporation, accompanied by this instrument signed by the members of the syndicate and Everly M. Davis and Joseph A. Durkin.

Exhibit P. 43.

Copies of this instrument may be executed as originals by one or more of the subscribers and when so executed each and all such copies shall be construed as originals so that if the said papers in the aggregate shall contain all the signatures of the members of the syndicate and Everly M. Davis and Joseph A. Durkin, the said paper shall be construed as one instrument as though all of the signatures had been made upon one paper and treated accordingly.

Dated New York, N. Y., July 20, 1917.

CHRISTIAN FLEISSNER

[In pencil:]

Please sign & return to me at once

J. W. O'BANNON

EXHIBIT P. 43.

New York, N. Y., May 28, 1917.

The undersigned subscribers to the Syndicate Agreement dated the 10th day of February, 1916, and the extension agreement dated the 30th day of December, 1916, and the contribution agreement dated the 19th day of February, 1917 between the members of the syndicate and E. M. Davis and Joseph A. Durkin, agree as follows:

For the purpose and for the purpose only of supplying to the Corporation One hundred and two thousand (102,000) shares of Maxim Munitions stock, the proceeds of which are to be made available for the use of the Corporation, the undersigned consent that the Trustee of the syndicate, J. Campbell Thompson be and he is

Exhibit P. 43.

hereby authorized and directed, subject to the further conditions hereof, to deliver up to One hundred and two thousand (102,000) shares of the syndicate stock to J. W. O'Bannon, as President of the Corporation as the same shall be called for by him, and that in all other respects the syndicate agreements above referred to remain unchanged.

To the above end the said subscribers and Davis and Durkin, agree to release their pro rata of the said One hundred and two thousand (102,000) shares of stock. It is understood that all said stock is to be sold at the best market price obtainable by said O'Bannon, with no commission or profit of any character to be paid, excepting such commissions as are paid to the broker or profits made by him on options required by him in marketing same; and that the net proceeds thereof be loaned to the Corporation upon the Corporation's notes bearing 5% interest, and that said notes be prorated among the various subscribers hereto exactly according to their various contributions of stock, the notes to be issued in three payments at four, five and six months.

Any subscriber hereto may decline to contribute his pro-rata, in which case the same will be offered to the other signatories hereto, and if the same is not taken by them Messrs. O'Bannon, Davis and Durkin agree that the amount of stock to be made up shall be taken from the interests in the syndicate of Messrs. O'Bannon, Davis and Durkin. If there be any such they will indicate the fact by putting an X after their names. All who sign without this mark will be deemed to have agreed to the proportion which their respective holdings bear to the full

Exhibit P. 43.

amount of One hundred and two thousand (102,000) shares or so much thereof as may be required for the purposes mentioned herein.

This agreement shall be effective when signed by all the original subscribers to the syndicate agreement dated the 10th day of February, 1916, or their successors in interest.

J. W. O'BANNON
ESMOND P. O'BRIEN
EVERLY M. DAVIS
JOSEPH A. DURKIN

J. Campbell Thompson
As atty. for J. B. Spencer

J. W. O'Bannon
As assignee of Samuel Zucker

W. P. Maloney
Nathan A. Gros.
Carlisle J. Gleason
Chas. A. Wimpfheimer
Julius Siegbert
Christian Fleissner
Otto H. Oppenheimer
Warner & Godfrey
By Clarence L. Warner

Adon J. Hoffman

X Robert Sweeny

X T. D. Palmer

Gaston, Williams & Wigmore, Inc.
By R. M. Lee Martin
Secretary

Herbert Lowell Dillon
William T. Koch
George W. Sanborn
By J. W. O'Bannon Atty. in fact

Exhibit P. 43.

Teresa H. Sweeny by Robert Sweeny
Edwin Packard
J. M. Townley
M. F. Burns O. K.
By Louis Huroos M. F. Burns
Atty
Benjamin F. Taylor Syndicate Manager
James S. Laing Trustee

New York, N. Y., July 2nd, 1917.

Received from the Maxim Munitions Corporation its notes as follows:

1	For	$434.88	payable November	2nd, 1917
1	"	434.88	" December	2nd, 1917
1	"	434.88	" January	2nd, 1918

Being in full of the net amount received by it from the sale of my stock given to it under an agreement of May 28th, 1917, signed by me.

I hereby give said Corporation full power and authority to sell twenty per cent. (20%) more of my said holdings in said Corporation under the same terms and conditions as said agreement of May 28th, 1917.

CHRISTIAN FLEISSNER

[In pencil:]

Sign & return to me at once

J. W. O'Bannon

EXHIBIT P. 44.

New York, N. Y., August 10th, 1917.

The undersigned hereby agrees with the Maxim Munitions Corporation and the members of a certain syndicate created under and by virtue of a certain syndicate agreement dated the 10th day of February, 1916, and Everly M. Davis and Joseph A. Durkin, as follows:

1. To deliver 956 shares of stock to the Maxim Munitions Corporation, being one-half of 1913 shares, the balance of my holdings of stock of the said Maxim Munitions Corporation now in the hands of J. Campbell Thompson as Trustee under the said syndicate agreement dated the 10th day of February, 1916 and other agreements supplementary thereto and amendatory thereof, subject to the further conditions of this instrument.

2. The stock is to be sold by the Maxim Munitions Corporation at the best market price obtainable, and at such times as in the discretion of the officers of the Corporation the best interests of all concerned will be served, without commissions or charges of any kind, except the ordinary brokerage commissions, and the net proceeds used for corporate purposes as a loan from the undersigned and that the undersigned shall receive therefor the corporation's notes bearing interest at five (5%) per cent, the said notes to be issued payable one-third in four months, one-third in five months and one-third in six months.

3. J. Campbell Thompson is hereby authorized, empowered and directed to deliver the said stock to the Maxim Munitions Corporation upon its order signed by J. W. O'Bannon as

Exhibit P. 44.

President, accompanied by this instrument or copies thereof signed by all the subscribers to the said syndicate agreement dated the 10th day of February, 1916, and Messrs. Everly M. Davis and Joseph A. Durkin.

4. Any subscriber to the said syndicate agreement, or Everly M. Davis or Joseph A. Durkin, may sign this instrument or a similar instrument with an X opposite his name, and when so signed such paper as to the person, firm or corporation so signing shall be construed as a refusal to contribute the stock upon the basis herein mentioned but a consent that all other subscribers and Messrs. Everly M. Davis and Joseph A. Durkin may so contribute and as authority to the Trustee to deliver the said stock.

This agreement shall become effective when signed by all the original subscribers to the syndicate agreement herein mentioned and Everly M. Davis and Joseph A. Durkin or their successors in interest. Copies of this instrument may be executed by one or more subscribers and when so executed each and all such copies shall be construed as originals so that if the said papers in the aggregate shall contain all the signatures of the members of the syndicate as aforesaid and Everly M. Davis and Joseph A. Durkin, the said instrument shall be construed as one instrument as though all signatures had been made upon one paper and treated accordingly.

CHRISTIAN FLEISSNER

[In pencil:]

Please sign & return to me at once

J. W. O'BANNON

Exhibit P. 45.

EXHIBIT P. 45.

MAXIM MUNITIONS CORPORATION.

Notes Issued to Mr. Fleissner.

Date	Number of shares sold	Maturity of notes	Principal amount	
July 2, 1917	637 sold at $2.048 per share	November 2, 1917;	$438.88	
		December 2, 1917;	438.88	
		January 2, 1918;	438.88	
				$1,316.64
July 25, 1917	638 sold at $1.85 per share	November 21, 1917;	$350.79	
		December 21, 1917;	350.79	
		January 21, 1918;	350.79	
				$1,052.37
Nov. 19, 1917	956 sold at $1.27 per share	January 4, 1918;	$407.21	
		February 4, 1918;	407.21	
		March 4, 1918;	407.21	
				$1,221.63
				$3,590.64

sold	2,231 shares	
donated	3,187	Davis & Durkin.
distributed	957	
	6,375	

Exhibit P. 46.

EXHIBIT P. 46.

[Cancelled checks drawn on The Garfield National Bank of New York by Maxim Munitions Corporation, payable to the order of Christian Fleissner, all endorsed with the signature "Christian Fleissner" and bearing various other endorsements and notations of payment. Said checks are dated and in amounts as follows:

Check No.	Date	Amount
5856	November 2nd, 1917	$ 7.33
6048	" 21st, "	5.91
6227	" " "	1.15
6318	December 3rd, "	9.17
6499	" 21st, "	7.35
6611	January 2nd, 1918	10.95
6837	" 21st, "	8.84
7244	March 4th, "	7.27
7759	April 22nd, "	7.03
8031	May 21st, "	6.92
8407	July 5th, "	7.28
8408	" " "	1.51
8578	" 22nd, "	7.09
8977	August 22, "	7.04
9381	September 23, "	7.21
9945	November 6th, "	5.30
9946	" " "	3.57
10424	December 23rd, "	7.09
10697	January 21st, 1919	6.92
11124	March 4th, "	3.39
11125	" " "	5.04
11290	" 24th, "	7.03
11477	April 23rd, "	6.97
11732	May 21st, "	6.92]

Exhibit P. 47.

July, 1917

Customers	A/c Pay	Expense	General		General	Expense	A/c Pay	Customers
			20878053	Various Stockholders Jn. 16 17				
				To Notes Payable-(J. W. O'Bannon) (13515 Shares)	✓ 922643			
				" " "	✓ 922643			
				" " "	✓ 922643			
				" " (J. S. Laing-2550 Shares)	170000			
				" " "	170000			
				" " "	170000			
				" " (Teresa Sweeney-187 Shares)	✓ 12767			
				" " "	✓ 12767			
				" " "	✓ 12767			
				" " (Ed. Packard + Townley)	✓ 217639	1d dif		
				" " " 3188 Shares	✓ 217639	1 dif		
				" " "	✓ 217639			
				" " (M. F. Burns 3000 Shares	✓ 204804			
				" " "	✓ 204804			
				" " "	✓ 204804			
				" " (Gaston, Williams + Wigmore)	✓ 435209	"		
				" " " 6375	✓ 435209			
				" " " Shares.	✓ 435209			
				" " E. P. O'Brien 4208 Shares	✓ 287272			
				" " "	✓ 287272			
				" " "	✓ 287272			
				" " W. A. Gros. 637 Shares	✓ 43488			
				" " "	✓ 43488			
				" " "	✓ 43488			
				" " G. W. Sanborn 1275 Shares	✓ 87042			
				" " "	✓ 87042			
				" " "	✓ 87042			
				" " C. Fleissner-637 Shares	✓ 43488			
				" " "	✓ 43488			
				" " "	✓ 43488			
				" " O. H. Oppenheimer	✓ 43556			
				" " " 638 Shares	✓ 43556			
				" " "	✓ 43556			
				" " C. J. Gleason-3875 Shares	✓ 261125			
				" " "	✓ 261125			
				" " "	✓ 261125			
				" " W. P. Maloney	✓ 87042			
				" " 1275 Shares	✓ 87042			
			20878053		8361183			

| Customers | Yes Pay | Expense | General | | |

November, 1917

Customers	A/c Pay	Expense	General	2228	19			General	Expense	A/c Pay	Customers
	26498 03	12353 40	464970 97					39224 13	6570 83	1876 45	103130 99
			11123334 ✓	Various Stockholders	To Notes Payable J. W. O'Bannon	Shares 18,891	✓	804675 ✓			
					do		✓	804675 ✓			
					do		✓	804675 ✓			
					Teresa Sweeney	281	✓	11969 ✓			
					do		✓	11969 ✓			
					do		✓	11969 ✓			
					M. F. Burns	4,500	✓	191681 ✓			
					do		✓	191681 ✓			
					do		✓	191681 ✓			
					J. M. Townley	3,187	✓	135752 ✓			
					do		✓	135752 ✓			
					do		✓	135752 ✓			
					W. H. Williams	1,912	✓	81443 ✓			
					do		✓	81443 ✓			
					do		✓	81443 ✓			
					G. A. Gaston	1,912	✓	81443 ✓			
					do		✓	81443 ✓			
					do		✓	81443 ✓			
					N. A. Gros	956	✓	40721 ✓			
					do		✓	40721 ✓			
					do		✓	40721 ✓			
					Wm P. Maloney	1912	✓	81443 ✓			
					do		✓	81443 ✓			
					do		✓	81443 ✓			
					H. L. Dillon	1912	✓	81443 ✓			
					do		✓	81443 ✓			
					do		✓	81443 ✓			
					Wm T. Koch	1912	✓	81443 ✓			
					do		✓	81443 ✓			
					do		✓	81443 ✓			
					C. A. Wimpfheimer	3825	✓	162928 ✓			
					do		✓	162928 ✓			
					do		✓	162928 ✓			
					Julius Siegbert	1147	✓	48857 ✓			
					do		✓	48857 ✓			
					do		✓	48857 ✓			
					Godfrey & Warner	3825	✓	162928 ✓			
					do		✓	162928 ✓			
					do		✓	162928 ✓			
	26498 03	12353 40	576204 31					451245 91	6570 83	1876 45	103130 99

154B

November, 1917

(Continued)

Customers	A/c Pay	Expense	Gen. Ledge	Name	Shares		General	Expense	A/c Pay	Customers
	26 498 03	12 353 40	576 204 31				25 1 245 91	65 70 83	1 876 45	103 130 99
				J. C. Thompson	566	✓	241 09	✓		
				do		✓	241 09	✓		
				do		✓	241 09	✓		
				L. D. Burkhardt	192	✓	81 78	✓		
				do		✓	81 78	✓		
				do		✓	81 78	✓		
				M. Coles	96	✓	40 89	✓		
				do		✓	40 89	✓		
				do		✓	40 89	✓		
				J. A. Wigmore	~~192~~ 1912	✓	814 43	✓		
				do		✓	814 43	✓		
				do		✓	814 43	✓		
				M. J. Budlong	1912	✓	814 43	✓		
				do		✓	814 43	✓		
				do		✓	814 43	✓		
				C. H. Sabin	1912	✓	814 43	✓		
				do		✓	814 43	✓		
				do		✓	814 43	✓		
				E. P. O'Brien	3,442	✓	1466 14	✓		
				do		✓	1466 14	✓		
				do		✓	1466 14	✓		
				H. L. Dellon	956	✓	407 21	✓		
				do		✓	407 21	✓		
				do		✓	407 21	✓		
				Geo. G. Bourne	1912	✓	814 43	✓		
				do		✓	814 43	✓		
				do		✓	814 43	✓		
				Geo. W. Sanborne	1912	✓	814 43	✓		
				do		✓	814 43	✓		
				do		✓	814 43	✓		
				C. Fleissner	956		407 21	✓		
				do	956		407 21	✓		
				do			407 21	✓		
				O. H. Oppenheimer	956	✓	407 21	✓		
				do		✓	407 21	✓		
				do		✓	407 21	✓		
				C. J. Gleason	5,737	✓	2443 71	✓		
				do			2443 71	✓		
				do		✓	2443 71	✓		
	26 498 03	12 353 40	576 204 31				479 948 08	65 70 83	1 876 45	103 130 99

Exhibit P. 48.

EXHIBIT P. 48.

Cable Address:
MAXIMUNICO-NEW YORK

Codes:
A B C—4th EDITION
WESTERN UNION

MAXIM MUNITIONS CORPORATION
EQUITABLE BUILDING
ONE HUNDRED TWENTY BROADWAY
NEW YORK

August 21st, 1916.

J. W. O'Bannon, Esq.,
President, Maxim Munitions Corporation,
120 Broadway, New York City.

My dear Mr. O'Bannon:—

I have your letter of even date herewith. Let me say that I am very desirous of doing anything in my power for the benefit of the Corporation. I quite understand, in view of the changed plans and prospects of business of the Corporation, the reasons for your letter to me, and I wish to say that, taking these things into consideration, I am very glad to accept the terms therein suggested, namely that I accept from you any time within thirty days from the date hereof, $9,121.60 for my stock interest in the Corporation, with payment in full for salary which shall have accrued up to the date of such payment, together with the payment of my small expense account of $34.72 already rendered; and forthwith upon such payment, I agree to the termination of my said agreements with the Corporation under dates of September 9th and September 22nd, 1915, and my agreements shall,

Exhibit P. 49.

upon the conclusion of such payments be considered terminated, and all my obligations thereunder at an end.

You may, therefore, take this letter as a firm option of thirty days from this date for the accomplishment of this matter. If, however, the matter shall not be accomplished and the said payments made to me within thirty days from the date hereof, then the offer made in this letter shall no longer remain good, and my relations with the Corporation will be the same as though this letter had not been written.

Respectfully,

HUDSON MAXIM

Witness:

LAURANCE ANGEL

Aug. 21, 1916

EXHIBIT P. 49.

THIS AGREEMENT, made and entered into this 18th day of November, 1916, by and between Laurance Angel of New York, party of the first part, hereinafter called Syndicate Manager, and the Subscribers hereto severally, parties of the second part, each and all of whom are hereinafter referred to as Subscribers and all of whom, together with the Syndicate Manager constitute the Syndicate, and the Maxim Munitions Corporation, a corporation organized and existing under the laws of the State of Delaware, with offices at 120 Broadway, New York City, hereinafter called the Corporation,

Exhibit P. 49.

WITNESSETH:

WHEREAS, on or about the 24th day of August, 1915, the Corporation was duly organized under the laws of the State of Delaware with a capital stock of Ten million ($10,000,000) Dollars all common, divided into One Million (1,000,000) shares of the par value of Ten ($10.) Dollars each, and

WHEREAS, the Corporation duly qualified and obtained authority to do business in the State of New York and is now doing business in the said State, and

WHEREAS, the Corporation acquired in the City of New Haven and suburbs, in the State of Connecticut, three plants known respectively as the "Fuller Plant," "Seward Plant" and "Secor Plant," the title thereto being vested in the said Corporation, upon which large amounts have been paid on account of the purchase price thereof, and

WHEREAS, on or about the 9th day of October, 1916, the Corporation acquired by lease for a term of two years, with the right and privilege to purchase any time within that period, a certain large munitions plant in the City of Watertown, State of New York, known as the "Wise Plant," and

WHEREAS, the Corporation has an order with the Royal Danish Government for Thirty Million (30,000,000) cartridges, upon which order deliveries are now being made, against which an established credit was fixed by the Royal Danish Government with the National City Bank of New York for the full amount of the said order, of which a payment of Three Hundred and Forty-five Thousand ($345,000) Dollars was made available to the Corporation for the pur-

chase of materials in connection with the said contract, and

WHEREAS, on or about the 19th day of April, 1916, the Corporation entered into a certain contract with the New England Westinghouse Company for the manufacture of bayonets, to be employed by it in filling an order of the Russian Government, aggregating the sum of Six Hundred and Twenty-five Thousand ($625,000) Dollars, upon which contract deliveries are being made, and

WHEREAS, the Corporation has recently entered into a profitable contract with one of the largest foreign automobile manufacturers to furnish it with finished and unfinished forgings for automobile parts, and the orders under the said contract have within the past few weeks amounted to about One Hundred and Seventy-five Thousand ($175,000) Dollars, and which give promise of exceeding One Million ($1,000,000) Dollars a year upon a very profitable basis, and

WHEREAS, the Corporation is now engaged in filling numerous other orders for cartridges and munitions parts, and has in prospect large additional orders of this nature, and

WHEREAS, the Corporation has now under negotiation contracts for cartridges of sufficient size and character to tax the capacity of all of its plants for more than two years to come with the foreign governments, and

WHEREAS, 185,000 shares of the stock of the Corporation have been put upon the market through J. Robinson-Duff and J. Robinson-Duff & Company, members of the New York Stock Exchange, and the said stock is now selling at about Six Dollars and Fifty Cents ($6.50) per share, and

Exhibit P. 49.

WHEREAS, the Corporation now holds as Treasury Stock 173,000 shares, and there is in escrow 642,000 shares not available for sale and 185,000 shares now outstanding, and

WHEREAS, the Corporation has installed a large amount of valuable machinery in the several plants owned by it, and the Wise Plant is also well equipped with cartridge making machinery, all the said machinery in all the plants being of the most approved type and suitable for the manufacture of cartridges, bayonets, war munitions and forgings, and

WHEREAS, the Corporation has acquired large quantities of materials for the manufacture of cartridges, bayonets, munitions and forgings and has arranged for other material necessary to fill the orders above mentioned, and

WHEREAS, it is now the desire of the Corporation to dispose of Thirty Thousand (30,000) shares of its Treasury stock to enable it to efficiently handle the contracts in hand and arrange for the handling of other large contracts now under negotiation, which contracts should yield a large and substantial profit to the Corporation, and

WHEREAS, all the money received from the sale of the said Treasury stock is to be placed in the Treasury for corporate purposes and none other and the Corporation shall receive the full benefit thereof.

NOW, THEREFORE, in consideration of the premises and the sum of One ($1.) Dollar by each of the parties hereto to the others in hand paid, the receipt whereof is hereby acknowledged, the Subscribers hereto agree with one another and with the Syndicate Manager of the said Corporation as follows:

New Jersey State Library

Exhibit P. 49.

1. The subscribers hereby form a Syndicate for the purpose of purchasing from the Corporation Thirty Thousand (30,000) shares of its Treasury stock at Five ($5.00) Dollars per share, the Subscribers to take and pay for the number of shares set opposite their respective names.

2. The subscribers shall pay for the said stock upon the signing of this instrument, for which the Syndicate Manager will promptly deliver to the Subscriber stock certificates for the amount of the subscription.

3. The stock so subscribed for shall not be offered for sale or transfer by the respective Subscribers before the 18th day of May, 1917, and on and after that date it may be offered for sale through J. Robinson-Duff & Company, Bankers and Brokers, 61 Broadway, New York City, and in the event that no trade can be made with J. Robinson-Duff & Company on the said stock so offered, then and in that event the Subscribers may at their option offer the stock through any other broker or individual.

4. All of the money received from the sale of the said Treasury stock shall be placed in the Treasury of the Corporation for Treasury purposes and none other, and the Corporation shall receive the full benefit thereof.

5. Nothing contained in this agreement or otherwise shall constitute the Subscribers partners with or agents for one another or with or for the Syndicate Manager.

6. This agreement shall in all things be binding upon and inure to the benefit of the heirs, executors, administrators, successors and assigns of the parties hereto.

In Witness Whereof, the Corporation has caused these presents to be executed by its

Exhibit P. 49.

proper officers duly authorized, and the Syndicate Manager and the Subscribers have subscribed this agreement on and after the date and year first above written.

MAXIM MUNITIONS
CORPORATION

By J. W. O'Bannon
President

Laurance Angel
Syndicate Manager

Name	Address	Number of Shares	Amount
J. W. O'Bannon,	120 Br'dwy,	2000	$10,000.
M. W. Norton,	98 Dorrance St. Providence R. I.	1000	5,000.
Ch. Fleissner,	121 N. J. R. R. Ave., Newark, N. J.	1000	5,000.
Otto H. Oppenheimer,	382 Frelinghuysen Ave., Newark, N. J.	2000	10,000.
Morgan J. O'Brien,	120 Broadway	1000	5,000.
Chas. O. Wimpfheimer,	450/460 Fourth Ave.	2000	10,000.
Jan. Burian,	450/460 Fourth Ave. N. Y. City	300	1,500
Frederick Lewisohn,	11 Broadway	500	2,500.
Oscar Lewisohn,	" "	300	1,500.
Jesse Lewisohn,	" "	300	1,500.
John Child Anderson,	50 Vanderbilt Ave. N. Y.	300	1,500.
Harry Content,	111 Broadway	500	2,500.
Donald Macdonald,	109 State St. Boston	1000	5,000.
Henry Kelly, Jr.,	413 West 14th St. N. Y. City	500	2,500.
Geo. H. Quinnard,	Morristown, N. J.	1000	5,000.
S. R. Munson,	New Haven, Conn.	1000	5,000.
J. & W. Seligman,	1 William St.	1000	5,000.
Henry Kelly, Jr.,	413 W. 14th St. N. Y. City	200	1,000.
Henry Searing,	72 Leonard St., N. Y. City	200	1,000.

EXHIBIT P. 50.

[Exemplified copy of certificate filed March 10, 1919, changing corporate name of Maxim Munitions Corporation to Maxim Corporation.]

EXHIBIT P. 51.

[Certified copy of order of District Court of the United States for the Southern District of New York, dated June 18, 1919, adjudicating Maxim Munitions Corporation a bankrupt and referring matter to Peter B. Olney, Esq., Referee in Bankruptcy.]

EXHIBIT P. 52.

[Certified copy of order of District Court of the United States for the Southern District of New York, referring case entitled "In the Matter of Maxim Corporation, Bankrupt. No. 26871" to Peter B. Olney, Jr., Referee in Bankruptcy, in place of Peter B. Olney, deceased.]

Exhibit P. 53.

EXHIBIT P. 53.

[Certified copy of Petition of Trustee for Assessment on Stock filed June 17, 1925, in the office of Peter B. Olney, Jr., Referee in Bankruptcy, which may be summarized as follows:]

Petition is entitled in the District Court of the United States for the Southern District of New York, "In the Matter of Maxim Corporation, Bankrupt. In Bankruptcy No. 26,871."

Paragraph I of the petition alleges that the petitioner is the trustee of the above-named bankrupt (in the petition called the Company).

Paragraph II alleges the incorporation of the Company under the General Corporation Law of Delaware; the total authorized capital stock; the business of the Company; the location of the principal place of business in the Borough of Manhattan, City of New York; and the change of name from Maxim Munitions Corporation to Maxim Corporation.

Paragraph III alleges the filing of an involuntary petition in bankruptcy against the Company; the appointment of a receiver in the Southern District of New York; the adjudication in bankruptcy; the reference to Peter B. Olney, Referee in Bankruptcy; the election and qualification of petitioner as trustee; the appointment of an ancillary receiver in the District of Connecticut; the turning over by the receivers to the trustee of all assets found by the receivers or the proceeds of such assets as were sold; the death of Peter B. Olney and the reference to Peter B. Olney, Jr., Referee in Bankruptcy.

Exhibit P. 53.

Paragraph IV alleges that the assets of the Company comprised certain manufacturing plants, which were sold at public auction in May, 1920, for less than the amount due on the mortgage to which said plants were subject.

Paragraph V alleges the facts with regard to a certain contract between the Company and Officine di Villar Perosa. The maximum amount of the net proceeds to be received therefrom by the Company was alleged to be $61,250.

Paragraph VI alleges $3,373.27 to be the sum remaining in the hands of the petitioner after the conversion of all of the assets of the Company into cash.

Paragraph VII alleges the amount of the claims allowed against the bankrupt estate, or of which the petitioner has notice, and refers to Exhibit A annexed to the petition as showing all claims against the bankrupt estate; also alleges the sum of $55,561.25 as the amount which will remain applicable to the payment of expenses of administration and dividends to creditors after the payment of all priority debts; also alleges that except as above therein set forth there are no assets applicable to the payment of the debts of the Company other than the liability of stockholders hereinafter referred to.

Paragraphs VIII and IX allege as follows:

> "VIII. Of the 1,000,000 shares of the par value of $10 each of capital stock of the Company originally authorized, there were paid up in full only 35 shares, of which 21 were issued and transferred from time to time to various persons to qualify them as directors, and 14 were issued to and disposed of by Robert Sweeny.

Exhibit P. 53.

"The balance of the capital stock of the Company as originally authorized, to-wit, 999,965 shares of the aggregate par value of $9,999,650, were issued by the Company pursuant to an agreement between the Company and Robert Sweeny, the terms of which are set forth in a letter from said Sweeny to the Company dated September 3, 1915, a letter from Hudson Maxim to said Sweeny dated August 26, 1915, and an extract from the minutes of the meeting of the board of directors of the Company held on September 4, 1915, copies of which letters and extract are annexed hereto, marked respectively Exhibits B, C and D, and made a part hereof. The properties, rights and privileges acquired by the Company in payment of its stock pursuant to said agreement, or such, if any, thereof as the Company was permitted by the provisions of the constitution and laws of the State of Delaware to accept in payment of its stock, although declared by the directors to be of the fair value of $9,999,650, were in fact without any value whatsoever. In making said declaration and authorizing the issue of said stock, the directors of the Company either knowingly placed a gross over-valuation upon the considerations to be received by the Company, with the intention of avoiding the provisions of the constitution and statute of the State of Delaware relating to the payment of stock, or their judgment as to the value of such considerations was reached without due examination into the elements of value, was based upon an estimate of matters which were not property within the meaning of the constitutional and statutory provisions above referred to, and was warped by self-interest. The judgment of said directors as to the value of the considerations to be received by the Company for said stock is not conclusive or binding on the creditors of the Company or on the petitioner or on this

Exhibit P. 53.

court. Although the certificate for said stock recited that the shares represented thereby were full paid and non-assessable, said shares were never fully paid, and may now be assessed in this proceeding for amounts not exceeding the amounts remaining unpaid thereon.

"IX. The history of the issue and transfer of said 999,965 shares of stock of the Company, in so far as material to this proceeding, is set forth in the statement annexed hereto, marked Exhibit E, and made a part hereof. As appears from said statement, various persons acquired either the record title to or the beneficial interest in various blocks of the unpaid stock of the Company, with actual notice that said stock was not fully paid or under such circumstances that said persons were chargeable in law with notice of said fact; many of said persons subsequently transferred such legal title or beneficial interest in whole or in part to persons insolvent or innocently purchasing in the open market or otherwise not amenable to assessment for the debts of the bankrupt, the transferors, remaining themselves liable to such assessment. Some of said stock after being so issued and vested was donated to or purchased by the Company and sold by it, and the profit accruing to the Company from such transactions in treasury stock is in equity to be credited as partial payments of the respective shares concerned."

Paragraph X suggests that the assessment to be ordered as thereinafter prayed for should include an amount sufficient to pay interest on the claims and the estimated expenses of administration.

Paragraph XI alleges the facts as to the death of various persons and the issue of letters testamentary under their wills, or of administration

upon their estates, and as to the distribution of some of said estates.

Paragraph XII alleges that assessments against some of the persons therein named would be wholly uncollectible or collectible only in the amounts therein mentioned.

Paragraph XIII suggests a gross rate of assessment per share, from which credits with respect to various of said shares were to be deductible, all as set forth in Exhibit F annexed to the petition.

Paragraph XIV alleges as follows:

"XIV. Annexed hereto, marked Exhibit G, and made a part hereof, is a list of the names of the persons who at various times took unpaid stock of the Company whether on original issue or by transfer, and whether as record holders or by acquisition of beneficial interest, with actual notice of the fact that said stock was not fully paid up, or under circumstances equivalent in law to such actual notice, and against whom or whose representatives or successors or the distributees of whose estates an assessment at the gross rate hereinabove suggested appears to be collectible, together with a statement opposite said names of the respective amounts of such stock so acquired, the respective credits in equity to be made, and the respective net sums payable with respect to such stock at the gross rate of assessment aforesaid less said credits, or the portion of said sums collectible from such persons or their representatives or successors or the distributees of their estates."

The petition contains the following prayers:

"1. That the court will ascertain the respective amounts remaining unpaid on the shares of capital stock of the Company.

Exhibit P. 53.

"2. That the court will ascertain the persons who appear at any time to have taken, held, transferred, assigned or been otherwise interested in unpaid stock of the Company under such circumstances as to be liable for the debts of the Company to the extent provided for by the statutes of the State of Delaware, and the respective amounts of such stock.

"3. That the court will ascertain the aggregate amount of debts of the Company allowed herein or lawfully payable, and the assets in the estate applicable to the payment thereof, and whether or not it is necessary to order an assessment on the unpaid stock of the Company in order to provide for the payment of said debts.

"4. That the court will ascertain the amount of interest on the debts of the Company properly to be provided for by assessment on said unpaid stock.

"5. That the court will ascertain the expense of levying, collecting and enforcing such assessment and of completing otherwise the administration and winding up of the bankrupt estate * * *.

"6. That the court will ascertain the gross rate of assessment per share that appears to be necessary, after allowing for sums properly to be credited on the respective shares, and after allowing for shares with respect to which no responsible persons appear to be liable, in order to pay all of the debts allowed herein or lawfully payable, with interest thereon and an amount for expenses to be found by the court as aforesaid.

"7. That the court will order and levy an initial assessment at the gross rate so found upon all of the unpaid shares of stock of the Company with respect to which any responsible persons appear to be liable, and will find the amounts which appear to be credits on said shares, respectively, and the

Exhibit P. 53.

net amounts of such assessment payable by the persons so appearing to be liable with respect to said stock, or by their representatives or successors or the distributees of their estates, respectively, and the date upon which said amounts shall be paid to the petitioner."

"8. That the court will order and direct the petitioner to proceed forthwith with the collection of said net amounts from such persons, their representatives or successors or the distributees of their estates, and in case default in the due payment of any thereof shall be made after notice and demand, to enforce such payment by actions or suits at law or in equity and in any jurisdictions where the persons so making default may be found, as the petitioner may be advised by counsel.

* * * * * *

"11. That the court will enter forthwith an order requiring the following named persons whose addresses, so far as known to the petitioner, appear in the following list opposite their names, respectively, to appear herein and file their answers to this petition on or before a day to be fixed in said order, and setting a date for a hearing hereon, and give such directions with regard to the service of this petition and such order on the persons to be effected thereby as to the court may seem meet:

Names	Addresses
* * *	* * *
Christian Fleissner....	125 New Jersey Railroad Avenue, Newark, New Jersey.
* * *	* * *"

The petition is verified on behalf of the petitioner by his attorney.

Exhibit P. 53.

Exhibit A attached to the petition is a list of claims against the Company, showing a total of $6,562.02 of priority claims and $1,287,906.31 of claims not entitled to priority.

Exhibit A reads in part as follows:

"CLAIMS AGAINST MAXIM (MUNITIONS) CORPORATION

Original Claimant	Assignee	Total Claimed	Interest Included in Column 1	Unallowable portion Included in Column 2	Principal allowed (after crediting securities)	Protest fees allowed	Interest allowable to May 29, 1919
***	***	***	***	***	***	***	***
	Claims not entitled to priority						
***	***	***	***	***	***	***	***
Christian Fleissner	.....	1,519.02	31.77	19.11	1,487.25	.....	12.66
***	***	***	***	***	***	***	***"

Exhibit B annexed to the petition is the same as Exhibit P. 4, *supra,* p. 290.

Exhibit C to the petition is the same as Exhibit P. 5, *supra,* p. 292.

Exhibit D to the petition is an extract from the minutes of the meeting of the Board of Directors of the Company held September 4, 1915, Exhibit P. 3, *supra,* p. 286.

Exhibit E to the petition is, in part, as follows:

"HISTORY OF ISSUE AND TRANSFER OF CAPITAL STOCK OF MAXIM (MUNITIONS) CORPORATION (herein called the Company).

"As set forth in the petition and foregoing Exhibits B, C and D, the entire capital stock of the Company—consisting of 35 shares paid up in cash and 999,965 remaining shares—was issuable to Robert Sweeny or upon his order. Pursuant to arrangement with him, the certificates

of original issue were executed and recorded on the books of the Company as follows:

[Here appears list of "Original Issue" certificates referred to in summary of Exhibit P. 35, *supra*, p. 292.]

"Said 5,000 shares issued in the name of Edward Purcell were, in fact, owned by Edwin Packard, and all or a substantial portion of said 20,000 shares issued in the name of William A. Scully were, in fact, owned by Robert Sweeny.

All of the persons hereinabove mentioned acquired record title to or beneficial interest in said stock with notice that all except 35 shares of said stock was not fully paid up or under circumstances equivalent in law to such actual notice.

"The subsequent history of said stock is as follows:

"(*a*) *Directors' shares.*—Of the 24 shares originally issued to qualify said Taylor, Brown, Angel, Maxim, Scully, Beckert, Sweeny and Porter as directors, 3 shares were transferred by Winfield P. Porter to Robert Sweeny on November 10, 1915, leaving 21 shares in the names of the directors. These were presumably part of the 35 shares fully paid up in cash by Sweeny.

"(*b*) *Stock sold by Promoters prior to Thompson Escrow.*—Of the stock (other than directors' shares) originally standing in the names of Sweeny, Scully, Purcell, Beckert, Crane and Burns, 64,996 shares were sold and the certificates therefor passed out of the control of those persons or their principals or beneficiaries prior to February 10, 1916; the persons into whose names said shares were transferred on the books of the Company, the number of shares transferred, and the dates of such record transfers, respectively, were as follows:

[Here appears list of transfers totalling 64,996 shares.]

Exhibit P. 53.

"Of the record transferees named or described in the foregoing list the petitioner believes and alleges that J. Robinson Duff, George C. Mercer, Elmer Z. Halstead and James J. Donnelly accepted transfers of the number of shares indicated opposite their names, respectively, with notice of the fact that said stock was not fully paid up or under circumstances equivalent in law to such actual notice; the petitioner is not informed whether Michael F. Burns, Robert E. Crane or Edward J. Bullwinkel had in fact or are chargeable in law with such notice; the petitioner believes that the other persons named or described in the foregoing list as record transferees of said stock, and all subsequent transferees and owners thereof, neither had in fact nor are chargeable in law with such notice.

"*Thompson Escrow.*—There then remained in the names of Sweeny, Packard, Beckert, Scully, Angel and Maxim (herein referred to as the Promoters), excluding directors' shares, 634,983 shares, which presumably included 14 of the 35 fully paid up shares. Said 634,983 shares (herein referred to as the Thompson Escrow) were pooled, the certificates therefor being deposited with and held by, first United States Mortgage and Trust Company, later J. Campbell Thompson, as trustee or depositary, and with the exception of 81,469 shares which were transferred into the name of J. Campbell Thompson, Trustee, remained in the names of the Promoters after beneficial interests therein had been vested in other persons; no transfers, except as aforesaid, being actually made on the transfer books until and unless stock was from time to time required for actual delivery for purposes of sale or distribution, and the particular certificates then being chosen for release by Thompson according to convenience in making up the respective amounts required and without regard to the

names in which they were registered. Interests in the Thompson Escrow were disposed of as follows:

"(1) 510,000 shares were sold by the Promoters in or about February or March, 1916, to a syndicate (herein referred to as the First O'Bannon Syndicate) for the sum of $200,000, which amount was, pursuant to the arrangement between the Promoters and said syndicate, paid into the treasury of the Company. The participants in said syndicate, their proportionate interests in the syndicate stock and the amounts paid by them or their principals, assignors or assigns in discharge of their syndicate obligation were, respectively, as follows:"

Name of Participant	No. of Shares	Payment
George G. Bourne	12,750	$ 5,000.00
Milton J. Budlong	12,750	5,000.00
L. D. Burkhardt	1,275	500.00
H. R. Remsen Coles	638	250.20
Margaret D. Coles	637	249.80
Herbert Lowell Dillon	19,125	7,500.00
George A. Gaston	12,750	5,000.00
Carlisle J. Gleason	38,250	15,000.00
Nathan A. Gros	6,375	2,500.00
James B. Higgins	50	19.60
Adon J. Hoffman	6,375	2,500.00
International Machine & Tool Corporation	25,500	10,000.00
William T. Koch	12,750	5,000.00
William P. Maloney	12,750	5,000.00
J. W. O'Bannon	127,500	50,000.00
Esmond P. O'Brien	22,950	9,000.00
Edwin Packard	15,937	6,249.80
Theodore D. Palmer	12,750	5,000.00
Charles H. Sabin	12,750	5,000.00
George W. Sanborn	12,750	5,000.00
Julius Siegbert	7,650	3,000.00
James B. Spencer	2,550	1,000.00
Teresa Sweeny	31,875	12,500.00
J. Campbell Thompson	1,225	480.40
J. Campbell Thompson, as attorney for Clarence L. Warner and James J. Godfrey	25,500	10,000.00

Exhibit P. 53.

J. M. Townley	15,938	6,250.20
William H. Williams	12,750	5,000.00
William H. Williams for J. A. Wigmore	12,750	5,000.00
Charles A. Wimpfheimer	25,500	10,000.00
Samuel Zucker	7,650	3,000.00
Total	510,000	$200,000.00

"Trust certificates for the respective amounts of stock above specified were issued to said syndicate members or their principals or assigns by J. Campbell Thompson as trustee.

"Said James B. Spencer in 1916 transferred his interest to J. Campbell Thompson. Said Theodore D. Palmer in 1916 transferred his interest, one-half to Christian Fleissner and one-half to Otto H. Oppenheimer, and said Fleissner and Oppenheimer were thereafter dealt with as members of said syndicate. The members of said syndicate, except International Machine & Tool Corporation, in or about February, 1917, assigned one-half of their interests, amounting to 242,250 shares, to Everly M. Davis and Joseph A. Durkin. Said Teresa Sweeny in or about , 1917, assigned 15,000 shares of her interest then remaining to Michael F. Burns, and said Burns was thereafter dealt with as a member of said syndicate.

"All of the members of said syndicate, their principals, assignors and assigns, acquired their respective interests in said shares of stock of the Company with notice of the fact that said stock was not fully paid up or under circumstances equivalent in law to such actual notice.

"The interest of International Machine & Tool Corporation in said stock, amounting to 25,500 shares, was acquired for the treasury of the Company at a cost of $28,050, and on re-sale by the Company on the open market 25,200 of said shares realized $47,850. Said lot is included in the 391,590 shares of treasury stock hereinbelow mentioned under clause (*d*).

Exhibit P. 53.

"In or about July, 1917, said Davis and said Durkin donated 100,000 shares of their interest in said stock to the treasury of the Company, which sold said shares on the open market and realized therefrom approximately $187,162.50 less broker's commissions and tax stamps. In or about June, July and August, 1917, the First O'Bannon Syndicate and Davis and Durkin sold on the open market 291,053 shares of their interest in said stock and loaned the proceeds thereof, approximately $488,253.63, to the Company and took notes of the Company therefor according to their respective interests in the stock so sold, and said notes or renewals or replacements thereof and interest thereon were thereafter paid in full or in part by the Company or have been proved as claims against its bankrupt estate.

"The sale of said 100,000 shares and 291,053 shares on the market was effected through brokers, and the greater part of said stock was transferred on the transfer books, prior to such sale, into the names of J. Campbell Thompson, Trustee, or employees of the Company, or brokers, whose names appear in the following list, showing the dates of such transfers, the record transferees and the number of shares transferred, respectively:

[Here appears list of transfers totalling 391,053 shares referred to in paragraphs 2, 3, 4 and 5 of the summary of Exhibit P. 35, *supra,* pp. 393, 394.]

"Of the record transferees named in the foregoing list the petitioner believes and alleges that J. Campbell Thompson and G. Jason Waters accepted transfers of the number of shares indicated opposite their names, respectively, with notice of the fact that said stock was not fully paid up or under circumstances equivalent in

Exhibit P. 53.

law to such actual notice; the petitioner is not informed whether the other persons named in the foregoing list had in fact or are chargeable in law with such notice; the petitioner believes that the 391,053 shares aforesaid were sold by said brokers in the open market and thereafter were held by and transferred into the names of persons who took said stock without notice of the fact that it was not fully paid and not under circumstances equivalent in law to such actual notice.

"In or about August, 1917, shares in the Thompson Escrow equal in number to the remaining interest of all of the syndicate participants (except International Machine & Tool Corporation) and of Davis and Durkin, aggregating 93,447 shares, were transferred on the transfer books into their own names and certificates for said shares were distributed to them as follows:

[Here appears list showing names of transferees and number of shares transferred, respectively, as mentioned in paragraph 6 of the summary of Exhibit P. 35, *supra*, p. 395.]

"Of said total amount, 85,083 shares were subsequently sold on the open market and thereafter held by and transferred into the names of persons without notice of the fact that said stock was not fully paid and not under circumstances equivalent in law to such actual notice. The balance, 8,364 shares, remains in the names of syndicate participants, their assigns or nominees as follows:

Exhibit P. 53.

Charles F. Bailey (for Carlisle J. Gleason)	338
George G. Bourne	1913
Everly M. Davis	788
Joseph A. Durkin	788
George A. Gaston	100
Adon J. Hoffman	956
Otto H. Oppenheimer	956
Charles H. Sabin	1200
J. M. Townley	900
Joseph A. Wigmore	400
Charles A. Wimpfheimer	25
Total	8364

"(2) The interest of Hudson Maxim in the Thompson Escrow, remaining after the deduction of the 510,000 shares sold to the First O'Bannon Syndicate and sundry shares contributed by the Promoters for expenses, legal services or gratuities, and amounting to 22,804 shares, was acquired for the treasury of the Company and on re-sale by the Company on the market realized $46,637.22 less commissions and taxes. Said lot is included in the 391,590 shares of treasury stock hereinbelow mentioned under clause (*d*).

"(3) 43,286 shares, out of the interest of some of the Promoters or their assigns in the Thompson Escrow, were acquired for the treasury of the Company and on re-sale on the market realized $84,709.49 less commissions and taxes. Of these shares, 11,297 were taken from the interest of Edward H. Beckert and cost the Company $5,000; and 31,989 were donated to the treasury by Robert Sweeny, Laurance Angel and Esmond P. O'Brien (the last-named being an assign of the Promoters). Said lots of 11,297 and 31,989 shares are included in the 391,590 shares of treasury stock hereinbelow mentioned under clause (*d*).

Exhibit P. 53.

"(4) 41,914 shares, comprising all of the remaining interest of Packard, and part of the interest of Sweeny, in the Thompson Escrow, as well as the interest of Thompson and other persons to whom the Promoters had assigned stock out of said 634,983 shares, and including presumably 14 of 35 shares fully paid up in cash by Sweeny, were sold on the market for the account of the owners. Of said stock 1500 shares still stand on the transfer books in the name of Beckert and 1300 in the name of Scully. The persons into whose names said shares (less the 2800 shares not transferred) were transferred on the books, the dates of such record transfers and the number of shares transferred, respectively, are as follows:

[Here appears list of transfers totalling 41,914 shares.]

"The petitioner is not informed as to whether the persons named as record transferees in the foregoing list accepted transfers of the shares therein specified with notice of the fact that said stock was not fully paid or under circumstances equivalent in law to such actual notice. None of the subsequent holders or record transferees of said shares is believed to have had in fact or to be chargeable in law with such actual notice.

"(5) 16,979 shares, being part of the interest of Sweeny and Beckert in the Thompson Escrow, were transferred on the books into the names of various of their associates and other persons, as follows:

[Here appears list of transfers totalling 16,979 shares, including among others the following:]

Exhibit P. 53.

DATE TRANSFERRED	NAME FROM WHICH TRANSFERRED	NAME INTO WHICH TRANSFERRED	NO. OF SHARES
1917			
Apr. 2	William A. Scully	William A. Scully....	1,000
" 3	Robert Sweeny	B. F. Taylor.....	4,750
" "	" "	John T. McGovern....	250.

"The transfers above set forth, as well as the sales of some of the 41,915 shares last hereinabove mentioned, were in satisfaction of orders on United States Mortgage and Trust Company as depositary executed by Sweeny and Beckert and delivered to various of their associates and other persons, calling for the delivery of stock out of the Thompson Escrow, as follows:

[Here appears list of names and amounts totalling 28,000 shares, including the following:

Executed by Robert Sweeny:

Name of Beneficiary	*No. of Shares*
Benjamin F. Taylor	4,750
William A. Scully	1,000
J. Hamilton Brown	1,500.]

"Of the persons named or described in the foregoing list as beneficiaries of said orders on United States Mortgage and Trust Company the petitioner believes and alleges that the following named persons took said orders and accepted the beneficial ownership of the stock referred to therein with notice of the fact that said stock was not fully paid up or under circumstances equivalent in law to such actual notice:

J. Hamilton Brown,
H. C. Bequembourg,
John T. McGovern,
E. L. Mohn,
Esmond P. O'Brien,
Jay Robinson-Duff,
William A. Scully,
Benjamin F. Taylor,
Charles Edward Turner.

Exhibit P. 53.

"The petitioner is not informed whether the following named persons had in fact or are in law chargeable with such notice.

William H. Burr,
Louis D. Jordan,
E. B. McConnell,
Aaron H. Schwarz.

"The petitioner believes that all of the other persons named or described in the foregoing list as beneficiaries of said orders neither had in fact nor are chargeable in law with notice that the stock for which said orders were issued was not fully paid.

"(*d*) *Treasury stock.*—The certificates for 300,000 shares originally issued in the name of Benj. F. Taylor, Assistant Treasurer, represented stock contributed to the treasury of the Company by Robert Sweeny. All of said stock, together with various other blocks aggregating 91,590 shares subsequently acquired for the treasury as hereinbefore mentioned, was from time to time sold by the Company for cash, or delivered to employees in lieu of salaries or to other persons at an agreed price. The persons to whom said stock was so sold or delivered, with the number of shares, the approximate prices per share at which the stock was sold or delivered, the persons into whose names the shares were transferred on the books of the Company and the dates of such record transfers, respectively, are given in the following list:

Exhibit P. 53.

[Here appears list, which includes the following items:

"IV. *Stock purchased by Second O'Bannon Syndicate of June, 1916:*

Date of Transfer 1916	Actual Purchaser	Record Transferee	No of Shares	Price per Share
***	***	***	***	***
July 19	Christian Fleissner	Same	1000	$5.00

** * * * * **

"V. *Stock Purchased by Third O'Bannon Syndivate of August, 1916:*

Date of Transfer 1916	Actual Purchaser	Record Transferee	No of Shares	Price per Share
***	***	***	***	***
Nov. 29	Christian Fleissner	Same	1000	$5.00

** * * * * **.]

"RECAPITULATION OF TREASURY STOCK.

		No. of Shares
I.	Stock purchased by the so-called "Taylor-Alcorn Syndicate"	87,735
II.	Stock delivered for services at $5.00 per share.....	8,400
III.	Sundry sales at $5.00 per share or over	13,000
IV.	Stock purchased by Second O'Bannon Syndicate of June, 1916	37,550
V.	Stock purchased by Third O'Bannon Syndicate of August, 1916....	14,000
VI.	Sundry sales at less than $5.00 per share	118,367

Exhibit P. 53.

VII.	Stock delivered for services at less than $5.00 per share.....	12,259
VIII.	Stock delivered to qualify directors	15
IX.	Stock subscribed for and taken but not paid for.....	500
X.	Stock delivered for various considerations	8,174
XI.	Stock from Thompson Escrow acquired for treasury from Hudson Maxim	22,804
XII.	Stock from Thompson Escrow acquired for treasury from Sweeny, Beckert, Angel and O'Brien.....	43,286
XIII.	Stock from Thompson Escrow acquired for treasury from International Machine & Tool Corporation	25,500
	TOTAL	391,590

"Of the persons named or described in the foregoing list as actual purchasers or record transferees of said treasury stock the petitioner believes and alleges that the following named persons took said stock with notice of the fact that said stock was not fully paid up or under circumstances equivalent in law to such actual notice:

[Here appears list of names, including that of Christian Fleissner.]

"The petitioner is not informed whether the following named persons had in fact or are in law chargeable with such notice:

Harry Content,
H. Content & Co.,
Louis Enricht,
Count Frederik Molike,
M. W. Norton.

Exhibit P. 53.

"The petitioner believes that all of the other persons named or described in the foregoing list as actual purchasers or record transferees of said stock, and all subsequent transferees and owners thereof, neither had in fact nor are chargeable in law with notice that said stock was not fully paid.

* * * * * *

"GENERAL RECAPITULATION

			No. of Shares
Directors' shares fully paid up			21
Sold by promoters prior to Thompson Escrow			64,996
Thompson Escrow:			
(1) First O'Bannan Syndicate*:			
Donated to treasury	100,000		
Sold for participants*	291,053		
Transferred to participants*	93,447		
International Machine & Tool interest	25,500		
		510,000	
(2) Hudson Maxim interest		22,804	
(3) Acquired for treasury:			
From Beckert	11,297		
From Sweeny *et al*	31,989		
		43,286	
(4) Sold for Promoters:			
Fully paid up	14		
Other	41,900		
		41,914	
(5) Transferred by Promoters		16,979	
			634,983
Treasury stock			391,590
Deduct stock from Thompson Escrow		91,590	
			300,000
Total			1,000,000

* And Davis and Durkin.

Exhibits F and G contain suggestions as to the computation of the assessment.

EXHIBIT P. 54.

IN THE

DISTRICT COURT OF THE UNITED STATES

FOR THE SOUTHERN DISTRICT OF NEW YORK.

IN THE MATTER OF MAXIM CORPORATION, *Bankrupt.*	*In Bankruptcy.* No. *26,871.*

ORDER TO SHOW CAUSE UPON PETITION FOR ASSESSMENT.

Upon reading the petition of James G. Graham, trustee in bankruptcy of the above-named bankrupt, verified June 17, 1925, and filed herein, praying for an assessment on the capital stock of the bankrupt, now, on motion of Ralph M. Arkush, attorney for the petitioner, it is

ORDERED, that the following named persons, to-wit:

Laurance Angel
Edward H. Beckert
George Gault Bourne
Oliver Berry Saalfield, as executor of the estate of J. Hamilton Brown, deceased.
Milton J. Budlong
Edward J. Bullwinkel
L. D. Burkhardt (Mrs. Schneider)
Francis L. Burns and Lillian Barry, as executors of the estate of Michael F. Burns, deceased

Exhibit P. 54.

William H. Burr
H. R. Remsen Coles
Margaret D. Coles
Harry Content
Harry Content, Walter Content and Albert M. Wittenberg, doing business under the firm name of H. Content & Co.
Robert E. Crane
Everly M. Davis
Herbert Lowell Dillon
James J. Donnelly
Carl S. Stern and Teresa M. Durkin, as executors of the estate of Joseph A. Durkin, deceased, and also as trustees under his will and distributees of his property
Louis Enricht
Christian Fleissner
M. O. Garner
George A. Gaston
Carlisle J. Gleason
James J. Godfrey
Nathan A. Gros
Elmer Z. Halsted
Harry C. Hequembourg
Adon J. Hoffman
International Machine & Tool Corporation
Louis D. Jordan
William T. Koch
William P. Maloney
Hudson Maxim
John T. McGovern
Herbert L. McNair
George C. Mercer
Louis L. Miller
E. L. Mohn
Count Frederick Moltke
M. W. Norton

Exhibit P. 54.

Minnie Wiegman as administratrix of the estate of John W. O'Bannon, deceased
Esmond P. O'Brien
Otto H. Oppenheimer
Elizabeth H. Packard and Harold S. Gladwin, as executors of the estate of Edwin Packard, deceased, and as executors of the estate of Julia H. Packard, deceased; and Mildred P. Halsey, Clara P. Gladwin and Elizabeth H. Packard as distributees of the property of Julia H. Packard, deceased
Josephine D. Palmer as executrix of the estate of Theodore D. Palmer
Winfield P. Porter
Edward Purcell
Jay Robinson-Duff
Charles H. Sabin
Hilda A. Klutz and William K. Harvey as executors of the estate of George W. Sanborn, deceased, and Hilda A. Klutz as residuary legatee
Aaron H. Schwartz
William A. Scully
Julius Siegbert
George J. Soden
James H. Spencer
Robert Sweeny
Teresa Sweeny
Benjamin F. Taylor
Henry Rutgers Remsen Coles and Margaret Davidson Coles, as executors of the estate of J. Campbell Thompson, deceased, and as distributees of his property
J. M. Townley
Frederic A. Travis
Charles Edward Turner
Clarence L. Warner

Exhibit P. 54.

J. Berens Waters, as administrator of the estate of G. Jason Waters, deceased, and Caleb F. Fox and J. Berens Waters, as trustees, and Dorothy Waters Gatins, Ruth Waters Pignatelli and J. Berens Waters as distributees of his property
Charles Wetherbee
Joseph A. Wigmore
William H. Williams
Charles A. Wimpfheimer
Samuel Zucker

and all other parties in interest be and they hereby are directed to show cause before me, at my office, Room No. 1200, on the twelfth floor of No. 2 Rector Street, Borough of Manhattan, City, County and State of New York, on August 6th, 1925, at 10:30 o'clock in the forenoon, why an assessment or assessments should not be ordered and levied on the capital stock of the above-named bankrupt as prayed for in said petition, and such findings made and order or orders entered with respect to said assessment or assessments as to the undersigned, after taking proofs, may seem just and proper; provided that any order or orders of assessment entered upon said petition shall be without prejudice to the right of any person who may thereafter be sued on said assessment or assessments in any court of competent jurisdiction to make any defense thereto personal to himself, unless such person shall have set up said defense and consented to the determination thereof in this proceeding; and it is

FURTHER ORDERED, that any of the persons hereinabove named or other parties in interest desiring to be heard in opposition to said petition shall file their answers thereto, duly verified, in the

Exhibit P. 54.

office of the undersigned and shall serve copies of said answers on the attorney for the petitioner on or before July 20th, 1925; and it is

FURTHER ORDERED, that the petitioner give notice of said hearing by serving or mailing copies of this order to show cause and said petition on or before June 24, 1925, upon or to each of the persons hereinabove named, at their addresses last known to the petitioner.

Dated, New York, June 19, 1925.

PETER B. OLNEY, JR.,
Referee in Bankruptcy.

[Certificate of Referee]

[Certificate of Clerk of District Court]

EXHIBIT P. 55.

[Certified copies of answers filed in the office of Peter B. Olney, Jr., Referee in Bankruptcy, in the bankruptcy proceeding pending in the District Court of the United States for the Southern District of New York, entitled "In the Matter of Maxim Corporation, Bankrupt. In Bankruptcy No. 26,871", to the Petition of Trustee for Assessment on Stock, Exhibit P. 53, summary of which appears *supra,* p. 431, *et seq.,* alleging, among other things, the following:]

Answer of Robert E. Crane:

(1) Admits the allegations of paragraph I of the petition;

(2) Denies the allegations contained in paragraphs II to XIV, inclusive, of the petition;

(3) Alleges that Crane was a member of the Copartnership of Crane & Bullwinkel, stock brokers, and acted only as broker in the sale of the 12,750 shares which were transferred into the name of Robert E. Crane;

(4) Denies jurisdiction of Referee;

(5) Sets up six-year statute of limitations.

Answer of Edward J. Bullwinkel:

[Similar to answer of Robert E. Crane]

Answer of Elmer Z. Halsted:

Denies allegations contained in paragraphs II to XIV, inclusive, of petition.

Answer of J. Robinson Duff:

(1) Denies allegations contained in paragraphs IV to X, inclusive, XIII and XIV of the petition

Exhibit P. 56.

(2) Alleges that J. Robinson Duff was engaged in his own name and as senior member of the former firm of J. Robinson Duff & Co., stock brokers, only as a broker in the purchase and sale of the stock of Maxim Munitions Corporation;

(3) Denies jurisdiction of Referee;

(4) Sets up six-year statute of limitations.

Answer of Minnie Wiegman, as administratrix of the estate of John W. O'Bannon, deceased:

(1) Denies all allegations of petition, except those contained in paragraph I and the allegations in paragraph XI as to death of John W. O'Bannon and issue of letters of administration upon his estate;

(2) Sets up ten-year statute of limitations;

(3) Sets up six-year statute of limitations;

(4) Sets up laches on part of petitioner;

(5) Denies jurisdiction of Referee.]

EXHIBIT P. 56.

[Certified copy of order levying assessment on capital stock. Same as Exhibit A annexed to complaint, *Supra* pages 8 to 18.]

Exhibit P. 57.

EXHIBIT P. 57.

Telephone Cortlandt 0031

JAMES G. GRAHAM
Attorney and Counsellor at Law
165 Broadway
New York City

New York, August 27, 1926.

Dear

Pursuant to order dated August 24, 1926, entered by Peter B. Olney, one of the Referees in Bankruptcy in the Southern District of New York, in the matter entitled "In the Matter of Maxim Corporation, Bankrupt, In Bankruptcy No. 26,871," I hereby demand payment to me as trustee on or before September 7, 1926, of the sum of $....., which has been assessed against you on account of your ownership or former ownership of shares of stock of Maxim (Munitions) Corporation, a Delaware corporation, the bankrupt above-named. Such payment may be made in cash, or by delivery to me of a receipt or receipts executed by the holder or holders of claims against the bankrupt estate, as provided in said order. In case you fail to make payment as aforesaid, I am directed by said order to institute legal proceedings against you. A copy of the order is enclosed.

Very truly yours,

JAMES G. GRAHAM
Trustee in Bankruptcy of
Maxim Corporation.

Exhibit P. 58.

EXHIBIT P. 58.

[Certified copy of proof of debt and letter of attorney, subscribed, sworn to and acknowledged by Christian Fleissner November 10, 1919, entitled "In the Matter of Maxim Corporation, 120 Broadway, New York City, Bankrupt," alleging a debt of $1,519.02, to which is attached copies of promissory notes of Maxim Munitions Corporation (or Maxim Corporation) to the order of Christian Fleissner, as follows:

Date 1919	Due Date 1919	Amount
March 4	July 5	$260.00
" "	" "	174.88
" 24	" 22	350.79
Apr. 23	Aug. 23	350.79
May 21	Sept. 22	350.79]

Post Office Department
OFFICIAL BUSINESS
REGISTERED ARTICLE
No. 32 9 PM 1925 6
INSURED PARCEL

PENALTY FOR PRIVATE USE TO AVOID PAYMENT OF POSTAGE, $300

POSTMARK OF DELIVERING OFFICE

AND DATE OF DELIVERY

Return to P. M. Astoria
(NAME OF SENDER)
(Street and Number, or Post Office Box.) 37 Wall

NEW YORK,
NEW YORK.

RETURN RECEIPT.

Received from the Postmaster the Registered or Insured Article, the original number of which appears on the face of this Card.

Christian Hansen
(Signature or name of addressee.)

C. Hansen
(Signature of addressee's agent.)

11193

Date of delivery, 6-25, 1925.

EXHIBIT P. 59.

Exhibit P. 59.

EXHIBIT P. 60.

DEPARTMENT OF COMMERCE

UNITED STATES PATENT OFFICE

TO ALL PERSONS TO WHOM THESE PRESENTS SHALL COME, GREETING:

THIS IS TO CERTIFY that the annexed is a true copy from the records of this office of the

Letters Patent of
HUDSON MAXIM,

Number 1,031,279, Granted July 2, 1912,

for

Improvement in a Combined Multibarrel Gun and Range-Finder.

IN TESTIMONY WHEREOF I have hereunto set my hand and caused the seal [SEAL] of the Patent Office to be affixed, at the City of Washington, this twenty-ninth day of May in the year of our Lord, one thousand nine hundred and twenty-eight and of the Independence of the United States of America the one hundred and fifty-second.

(Sgd) THOMAS E. ROBERTSON
Commissioner of Patents.

Attest:

(Sgd.) D. E. WILSON
Chief of Division.

Government Printing Office
11-8626

Exhibit P. 60.

No. 1031279

THE UNITED STATES OF AMERICA

TO ALL TO WHOM THESE PRESENTS SHALL COME:

Whereas Hudson Maxim, of Brooklyn, New York,

Presented to the Commissioner of Patents a Petition Praying the Grant of Letters Patent for an Alleged New and Useful Improvement in

A Combined Multibarrel Gun and Range-Finder,

A Description of Which Invention Is Contained in the Specification of Which a Copy Is Hereunto Annexed and Made a Part Hereof, and Has Complied with the Various Requirements of Law in Such Cases Made and Provided, and

Whereas Upon Due Examination Made the Said Claimant is Adjudged to be Justly Entitled to a Patent Under the Law.

Now Therefore These Letters Patent are to Grant Unto the Said Hudson Maxim, his Heirs or Assigns for the Term of Seventeen Years from the second Day of July, One Thousand Nine Hundred and twelve, the Exclusive Right to Make, Use and Vend the Said Invention Throughout the United States and the Territories Thereof.

Exhibit P. 60.

In Testimony Whereof, I have hereunto set my hand and caused the seal [SEAL] of the Patent Office to be affixed at the City of Washington this second day of July, in the year of our Lord one thousand nine hundred and twelve, and of the Independence of the United States of America the one hundred and thirty-sixth.

C. C. BILLINGS
Acting Commissioner of Patents.

H. MAXIM.

COMBINED MULTIBARREL GUN AND RANGE FINDER.

APPLICATION FILED JULY 1, 1910.

1,031,279.

Patented July 2, 1912.

3 SHEETS—SHEET 3.

Fig. 6.

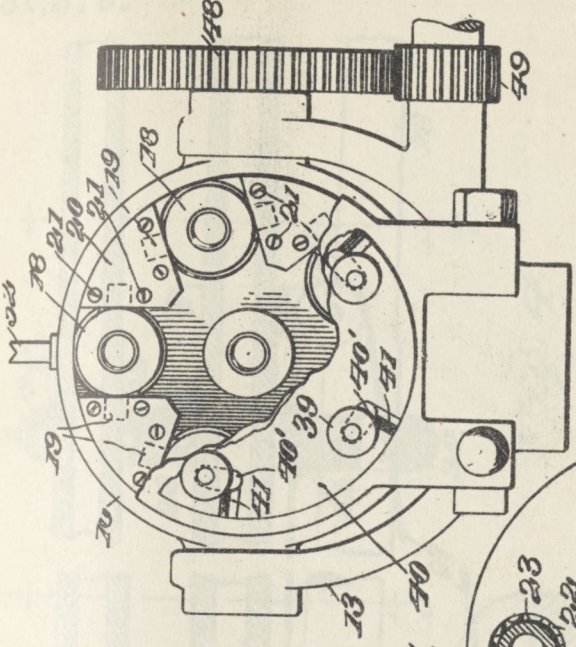

Fig. 7.

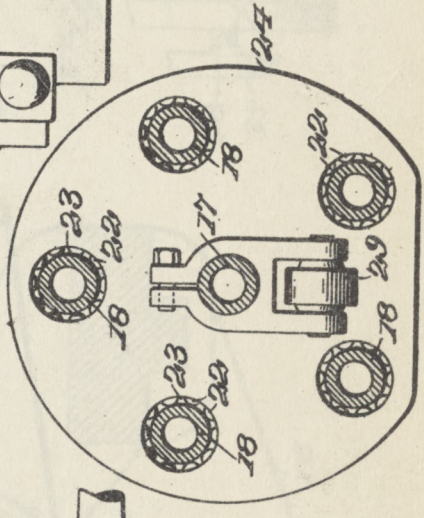

Fig. 5.

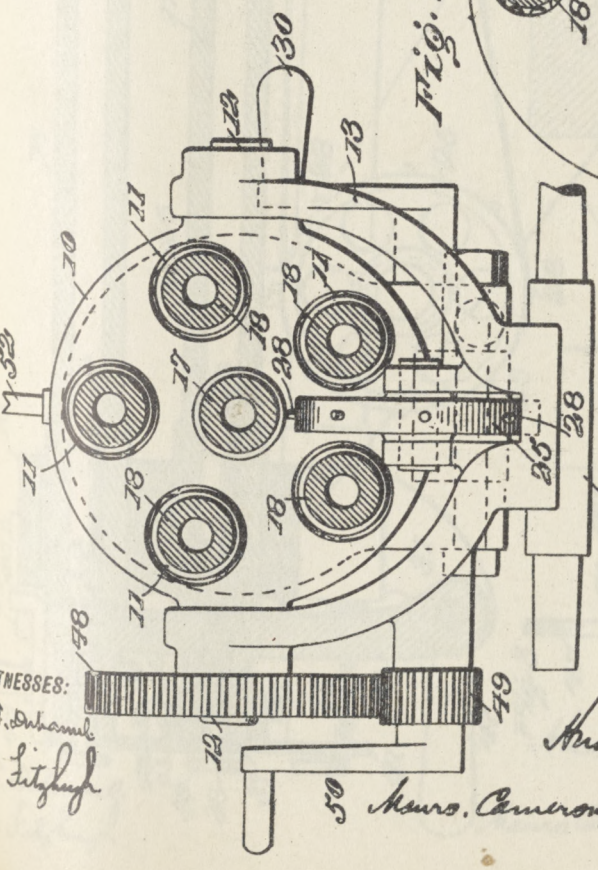

WITNESSES:

James F. Dunham

Rud C. Fitzhugh

INVENTOR

Hudson Maxim

BY

Munn, Cameron, Davis & Hosier

ATTORNEYS.

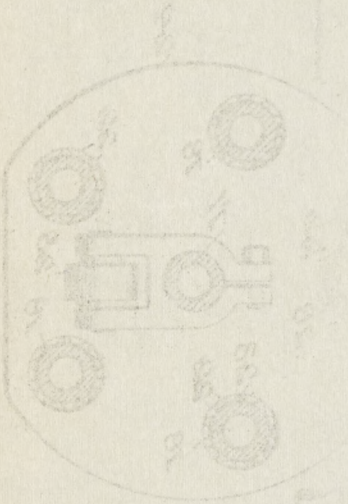

H. MAXIM.

COMBINED MULTIBARREL GUN AND RANGE FINDER.

APPLICATION FILED JULY 1, 1910.

1,031,279.

Patented July 2, 1912.

3 SHEETS—SHEET 2.

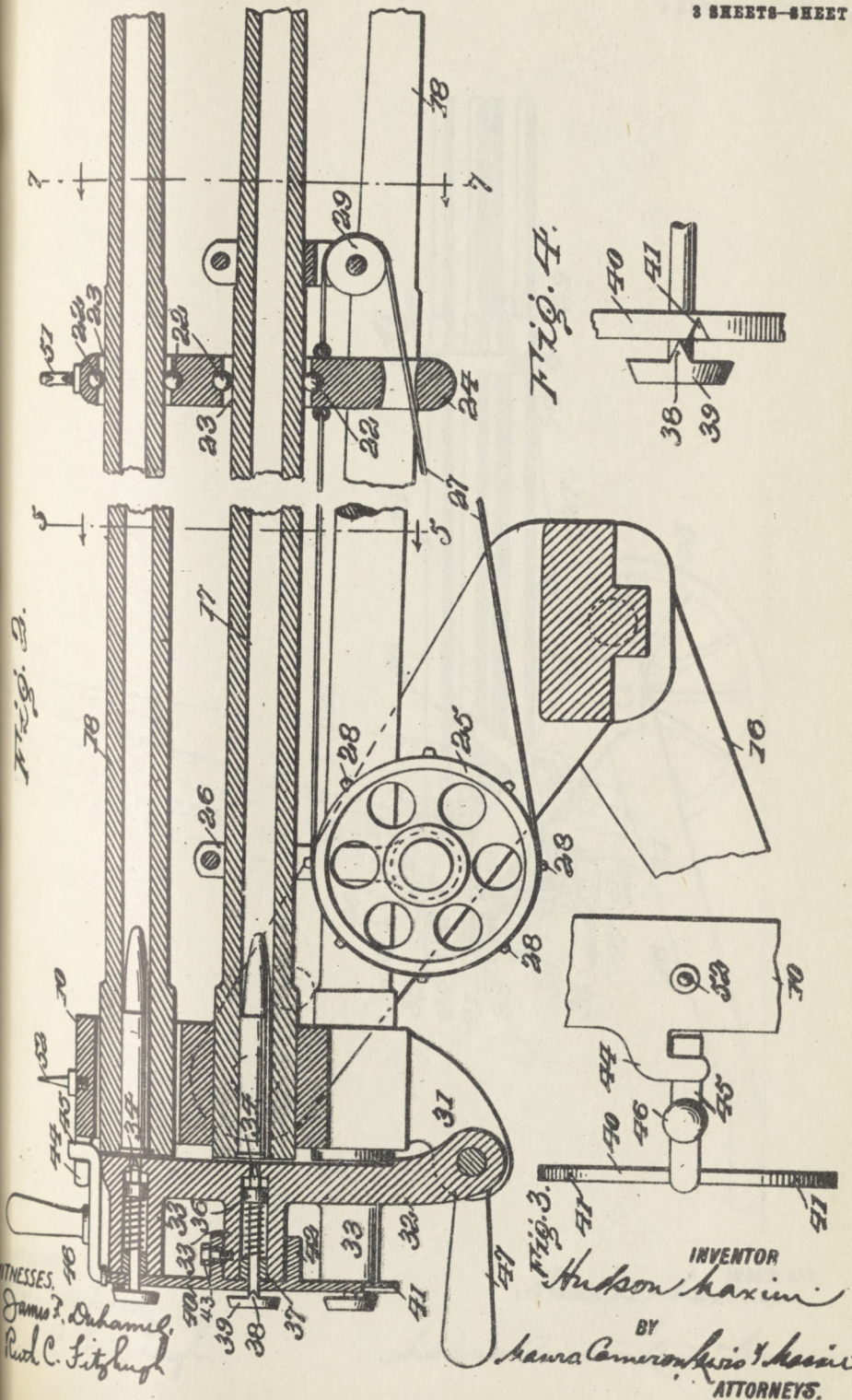

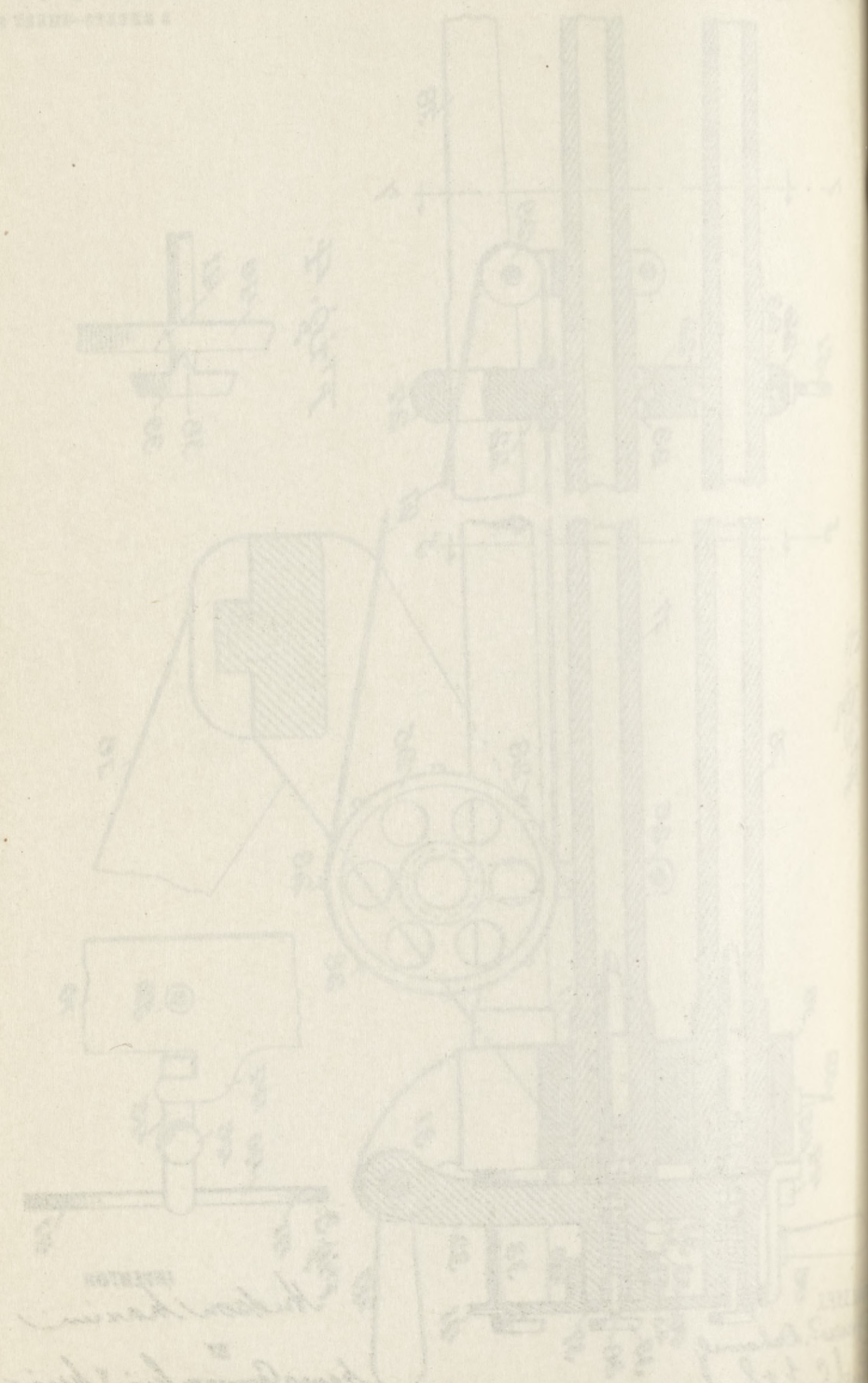

EXHIBIT P. 60.

H. MAXIM.

COMBINED MULTIBARREL GUN AND RANGE FINDER.

APPLICATION FILED JULY 1, 1910.

1,031,279.

Patented July 2, 1912.

3 SHEETS—SHEET 1.

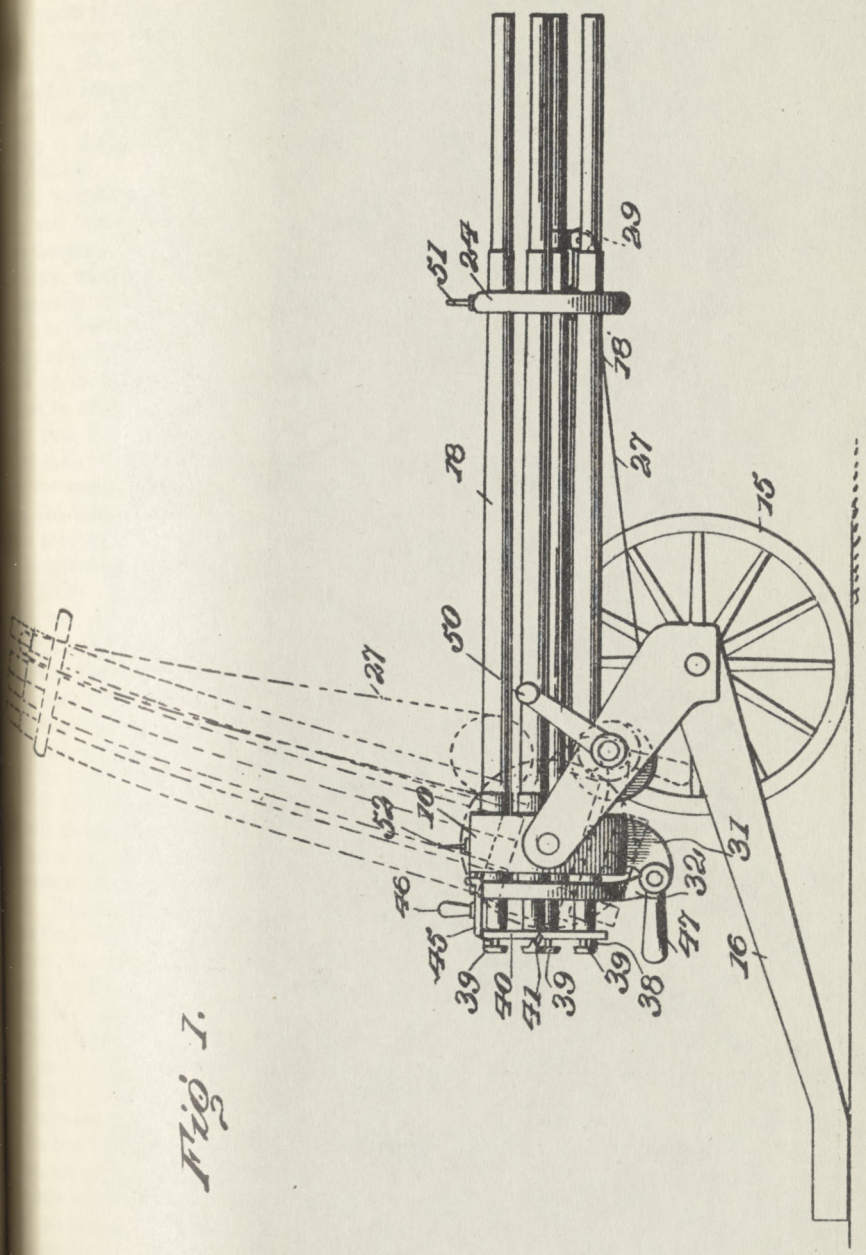

Fig. 1.

WITNESSES:

James J. Duhamel

Ruth C. Fitzhugh.

INVENTOR

Hudson Maxim

BY

Munn, Anderson, Lyon & Macrae

ATTORNEYS

UNITED STATES PATENT OFFICE.

HUDSON MAXIM, OF BROOKLYN, NEW YORK.

COMBINED MULTIBARREL GUN AND RANGE-FINDER.

1,031,279. Specification of Letters Patent. Patented July 2, 1912.

Application filed July 1, 1910. Serial No. 569,967.

To all whom it may concern:

Be it known that I, HUDSON MAXIM, of Brooklyn, New York, have invented a new and useful Improvement in Combined Multibarrel Guns and Range-Finders, which invention is fully set forth in the following specification.

This invention relates to improvements in guns, and more particularly to that class of guns designed for the destruction of flying machines, whether balloons or aeroplanes.

Generally stated, the object of the invention is to produce a gun from which a multiplicity of projectiles may be fired, simultaneously or in series, from a multiplicity of barrels so mounted with respect to one another that the projectiles on striking the target shall be regularly dispersed or spread over the same, whereby the chances of hitting, and thus disabling, a balloon or aeroplane are greatly enhanced.

The invention contemplates the firing of a multiplicity of projectiles at high velocity, which will carry them at very long ranges and with great accuracy, the dispersion or spreading out of the projectiles fired being in all cases such that at any given range the projectiles on reaching the target shall not be spread out over an area greater in extent than the target itself.

With this object in view, the invention, broadly stated, consists of a plurality of gun barrels of any desired caliber, mounted upon a common base, gun carriage or other support. Preferably, the series of gun barrels are articulated to the base or support in such manner that their muzzles may be adjusted toward or from the common center of the group of barrels, and means are provided for so adjusting the muzzles of the barrels and maintaining them in such adjustment. Preferably such means consists of a rigid centrally-arranged support, fixedly secured to the base and projecting forwardly therefrom, the gun barrels being articulated to the base symmetrically around said support and projecting forwardly along the same at a greater or less angle thereto, according to the position of the adjusting devices. The central forwardly-projecting support may be, and preferably is, itself a gun barrel.

Any suitable number of barrels may be employed, as, for example six, one of which is fixedly secured to the base and projects forwardly therefrom, while the other five are articulated to the base, preferably near the breech end of the barrels, and are symmetrically arranged around the central forwardly-extending and supporting barrel.

Preferably, the five barrels are articulated to the base by means of trunnions on the barrels, resting in trunnion bearings on the base-piece, the arrangement of the trunnions and the bearings for each barrel being such that the barrels themselves move in planes radial to the central gun-barrel or support.

The base to which the barrels are secured is itself provided with trunnions resting in bearings provided in a yoke-piece, which is secured directly to the axle or other portion of the gun-carriage, and any suitable means are provided for turning the base-piece on its trunnions so as to give the gun the necessary elevation to point it at the target. One simple and efficient means for thus elevating the gun consists of a pinion secured to one of the trunnions of the base-piece, which pinion meshes with another pinion on a crank shaft, turned by any suitable means for applying power, as, for example, an ordinary crank.

The several barrels are provided with a common breech-block in which are mounted a series of firing pins corresponding to the several barrels, and suitable means are provided for opening, closing and locking the breech-block and liberating the firing pins to explode the cartridges.

Any suitable means may be employed for symmetrically moving the muzzles of the exterior barrels in planes radial to the central support to give to the projectiles the spread necessary to have them just cover an area equal to the target upon reaching the same. I have shown for this purpose a disk provided with a central perforation and a series of symmetrically arranged perforations near the periphery of the disk, the number of such latter perforations corresponding to the number of exterior barrels on the gun. This disk is mounted on the gun with the central support or barrel passing through the central opening in the disk, and with each gun-barrel in the outer series passing through its corresponding circumferential opening. By sliding this adjusting disk rearward, the muzzles of the barrels can be spread outward with relation to the central barrel or support, and by sliding the disk forward, the muzzles of the barrels can be

brought closer together. Preferably, the bearings of the disk on the barrels are antifrictional bearings, such as ball bearings, the balls being mounted in suitable raceways provided in the disk. Any suitable power mechanism may be employed for adjusting the disk forward or backward.

One of the highly important features of the invention consists in combining a range-finder with the adjustable gun-barrels and the means for adjusting the same in such way that adjustment of the range-finder to any given range of the target will necessarily and automatically secure the adjustment of the gun-barrels, so that the spread of the projectiles at that range will be just sufficient to outline or encircle the target, thus greatly enhancing the probability of some of the projectiles hitting the target. I secure this combination of range-finder, gun-barrels and adjusting means by mounting one member of the range-finder directly upon the disk employed for adjusting the muzzles of the gun-barrels, the other member of the range-finder being mounted upon the base-piece to which the outer series of gun-barrels are articulated. In sighting the gun to find the range, the disk carrying the open member of the sight is adjusted until the rays of light from the outlines of the target pass through the opening in the member on the disk, and to the eye of the gunner over the rear sight fixed on the base-piece. In thus adjusting the disk to secure the range, the gun-barrels are automatically adjusted so as to lie parallel with the rays of light passing from the outlines of the target to the eye of the gunner through the front or globe sight. In other words, by the adjustment of the globe sight upon the target when the latter is just covered or inclosed by the sight, all the barrels will be directed upon the target, so that the projectiles therefrom will come within the outlines of the target. It will thus be perceived that I have provided a combined gun and range-finder capable of use in all of the ranges for which the particular gun is adapted.

The inventive idea involved is capable of receiving a variety of mechanical expressions, and for the purpose of illustrating the invention, I have shown only one of these embodiments in the accompanying drawings, in which drawings—

Figure 1 is a side elevation of the gun, showing in dotted lines the barrels elevated as for firing at a balloon; Fig. 2 is a central longitudinal section, and Figs. 3 and 4 are broken details, of the breech-block locking mechanism and firing devices; Fig. 5 is a vertical transverse section on the line 5—5 of Fig. 2; Fig. 6 is a broken rear elevation of the gun; and Fig. 7 is a transverse vertical section on the line 7—7 of Fig. 2.

Referring to the drawings, in which like reference numerals indicate like parts, 10 is a cylindrical base-piece, provided with openings or passages 11 and trunnions 12, 12, by which trunnions said base-piece is mounted in a yoke 13 secured to axle 14, which is in turn carried by the wheels 15 of the gun-carriage, the latter being provided with a trail 16. Rigidly secured to, and projecting forwardly from, the base-piece 10 is the central support, here shown as a gun-barrel, 17. This barrel or support fits snugly within and entirely fills the central passage 11, so that it is incapable of any turning movement therein. The outer series of barrels 18 extend each through one of the passages 11 located near the outer edge of the base 10, the diameter of these barrels being less than that of the passages 11, to permit them to swing to or from the central supporting barrel 17.

Referring to Fig. 6, each of the barrels 18 is provided with trunnions 19 at the rear end, mounted in trunnion bearings formed in triangular plates 20, located between the adjacent barrels, said plates being preferably secured to the base-piece 10, as by screws 21, to the end that they may be readily removed and the barrels taken from the gun when desired.

Referring to Fig. 2, the forward or muzzle ends of the barrels are supported in ball bearings 22 arranged in the openings 23 of the disk 24 adapted to be moved along the rigidly mounted central support or barrel 17. The openings 23 in the disk 24 are arranged farther from the center of the rigid central support or barrel 17 than are the passages 11 in the base-piece 10, so that when the disk 24 is moved toward the base-piece 10, the barrels 18 are spread radially at their outer or muzzle ends, thus causing the projectiles fired therefrom to cover a larger area than when the disk is moved outward or forward, in which last case the projectiles fired from the gun will be more concentrated. It will thus be seen that the gun-barrels are readily adjustable for use in long, intermediate, or short range fire. Where the target is at short range, the disk 24 is moved to give a greater spread to the muzzles of the gun; and when the target is at long-range, the disk is moved to give a less spread to the muzzles of the gun-barrels. As here shown, the adjustment of the disk 24 is accomplished by means of a sprocket-wheel 25 carried in a yoke 26 depending from the central support or barrel 17, over which sprocket-wheel passes a perforated metal strap 27, the perforations in the strap receiving studs 28 arranged on the wheel. One end of the strap is secured to the rear side of the disk 24, and the other end passes over an idler 29, and is secured to the forward side of said disk. The sprocket-wheel 25 is rotated by any suitable means for applying

power, as, for example, the crank-arm 30 (Fig. 5).

Referring to Fig. 2, 31 is a bracket depending from the base-piece 10, and 32 is a breech-block or plate hinged thereto, and having hollow rearwardly projecting bosses 33, in which play the firing pins 34 normally forced forward by springs 35 reacting between the collars 36 on the pins and the plugs 37 in the hollow bosses. The pins project rearwardly through curved slots 40′ (Fig. 6), in a disk 40 mounted to turn upon the central boss 33. Said pins are provided with heads 39 having a forwardly projecting tooth 38, and the disk 40 is provided with corresponding grooves or depressions 41 (Fig. 4). Normally the position of the disk 40 is such that the teeth 38 on the firing pins rest against the rear face of the disk, but when the latter is turned slightly on its axis, the teeth 38 on the heads of the firing pins enter the grooves 41 on the disk, thus permitting the firing pins to be advanced by their springs sufficiently to explode the cartridges. The disk 40, as before stated, turns on the central rearwardly-projecting boss 33, and for this purpose has a hollow hub 42 encircling the boss, and is secured thereon by means of a set screw 43 entering a circumferential groove in the boss, as will be understood by an inspection of Fig. 2.

The base-piece 10 has a rearwardly extending hook 44 (Figs. 2 and 3), and the disk 40 has a latch 45 secured thereto, which engages the hook 44 when the disk is turned to release the pins and explode the cartridge. This turning movement of the disk is effected manually, and a handle 46 on the upper side of the latch 45 is provided for this purpose. The act of turning the disk 40 to disengage the latch 45 from the hook 44 also serves to withdraw the firing pins by the cam engagement of the teeth 39 with the sides of the grooves 41. In order to elevate the gun at any desired angle for firing, and to aim the gun with ease and accuracy, a gear wheel 48 (Figs. 5 and 6) is mounted on one of the trunnions 12 of the base-piece 10, which gear wheel 48 is actuated by a pinion 49 intermeshing therewith and carried on a shaft turned by means of crank-arm 50.

The forward part 51 of the sighting and range-finding devices is mounted on the upper part of the disk 24, while the rear member 52 is mounted on the base-piece 10. It will readily be perceived that when the target is at short range, the member 51 must be moved toward the member 52, in order that the target may be brought within the outlines of the forward member 51, that is, in order that the rays of light extending from the outer edges or parts of the target may pass through the forward member 51 to the eye of the gunner over the stationary member 52. Conversely, when the target is at long range, the member 51 will have to be moved outward or forward, in order that the target may just fill the opening in the forward member 51. It will also be observed that these movements of the forward member of the sighting device are secured by moving the disk 24, and that when the disk 24 is moved rearwardly, the muzzles of the outer gun-barrels 18 are moved outward radially from the central support or gun-barrel, and that when the disk 24 is moved forward, the muzzles of the barrel 18 are moved radially inward toward the central support or gun-barrel 17, thus so combining the gun and the range-finder that the gun is always adjusted for any given range when the range-finder is adjusted so as to properly bear on the target at such range.

What is claimed is:—

1. A gun of the class described comprising a central support, a series of gun-barrels arranged around said support, and means adjusting in radial planes the muzzles of said barrels with relation to said support as a center.

2. A multibarrel gun comprising a fixed central support, a plurality of gun-barrels arranged around said support, and means adjusting in radial planes the muzzles of said barrels with relation to said central support.

3. In a multibarrel gun, a base-piece, a central support projecting forward therefrom, a plurality of barrels symmetrically arranged around said support, and means adjusting in radial planes the muzzles of said barrels with respect to said support as a center.

4. In a multibarrel gun, an axle, a base-piece connected thereto, a central barrel projecting forward from said base-piece, a plurality of barrels projecting forward from said piece and symmetrically arranged around said central barrel, and means adjusting the muzzles of said last-named barrels with relation to the muzzle of said central barrel.

5. In a multibarrel gun, a base-piece, a series of barrels jointed at their breech ends to said base so as to swing in radial planes, a central support projecting forward from said base-piece, and means simultaneously and symmetrically adjusting the muzzles of said barrels radially with relation to said central support.

6. The combination of a plurality of gun-barrels, a range-finder, and means simultaneously and relatively adjusting said range-finder and gun-barrels.

7. The combination of a range-finder, a series of barrels arranged around a fixed support, and means simultaneously and relatively adjusting the range-finder and said barrels.

8. The combination of a range-finder, a series of barrels arranged around a fixed support, and means simultaneously adjusting the range-finder longitudinally and said barrels radially with relation to said central support.

9. The combination of a base-piece, a central gun-barrel fixedly secured to and projecting forward from said base-piece, a plurality of gun-barrels articulated to and projecting forward from said base-piece around said central barrel, and a member slidable on said central barrel and engaging each of the other barrels.

10. The combination of a plurality of gun-barrels, a support upon which said barrels are mounted to swing in radial planes, and means adjusting said barrels to a position parallel with the rays of light extending from the target to the eye of the gunner.

11. The combination of a base-piece, a plurality of barrels articulated thereto around a central point, a sighting device through which the rays of light travel from the outlines of the target to the gunner's eye, and means for adjusting said sighting device upon the target and simultaneously adjusting said gun-barrels to a position parallel with said rays of light.

In testimony whereof I have signed this specification in the presence of two subscribing witnesses.

HUDSON MAXIM.

Witnesses:
ETHEL FITZ GIBBON,
AUG. S. BRYANT.

Exhibit P. 60.

Exhibit P. 61.

EXHIBIT P. 61.

DEPARTMENT OF COMMERCE

UNITED STATES PATENT OFFICE

TO ALL PERSONS TO WHOM THESE PRESENTS SHALL COME, GREETING:

THIS IS TO CERTIFY that the annexed is a true copy from the records of this office of the

Letters Patent of
HUDSON MAXIM,

Number 1,310,200, Granted July 15, 1919,

for
Improvement in Position Indicators or Recorders.

IN TESTIMONY WHEREOF, I have hereunto set my hand and caused the seal [SEAL] of the Patent Office to be affixed, at the City of Washington, this twenty-ninth day of May, in the year of our Lord, one thousand nine hundred and twenty-eight and of the Independence of the United States of America the one hundred and fifty-second.

THOMAS E. ROBERTSON
Commissioner of Patents.

Attest:

D. E. WILSON
Chief of Division

Government Printing Office
11-8626

Exhibit P. 61.

No. 1310200

THE UNITED STATES OF AMERICA

TO ALL TO WHOM THESE PRESENTS SHALL COME:

Whereas Hudson Maxim,
of
Hopatcong Borough, New Jersey,

Has Presented to the Commissioner of Patents a Petition Praying for the Grant of Letters Patent for an Alleged New and Useful Improvement in

Position Indicators or Recorders,

A Description of Which Invention Is Contained in the Specification of Which a Copy Is Hereunto Annexed and Made a Part Hereof, and Has Complied with the Various Requirements of Law in Such Cases Made and Provided, and

Whereas Upon Due Examination Made the Said Claimant Is Adjudged to Be Justly Entitled to a Patent Under the Law.

Now Therefore These Letters Patent are to Grant Unto the Said Hudson Maxim, his Heirs or Assigns for the Term of Seventeen Years from the fifteenth Day of July, One Thousand Nine Hundred and nineteen, the Exclusive Right to Make, Use and Vend the Said Invention Throughout the United States and the Territories Thereof.

Exhibit P. 61.

In Testimony Whereof, I have hereunto set my hand and annexed the seal [SEAL] of the Patent Office to be affixed in the District of Columbia this fifteenth day of July, in the year of our Lord one thousand nine hundred and nineteen, and of the Independence of the United States of America the one hundred and forty-fourth.

R. F. WHITEHEAD
Acting Commissioner of Patents

EXHIBIT P. 61.

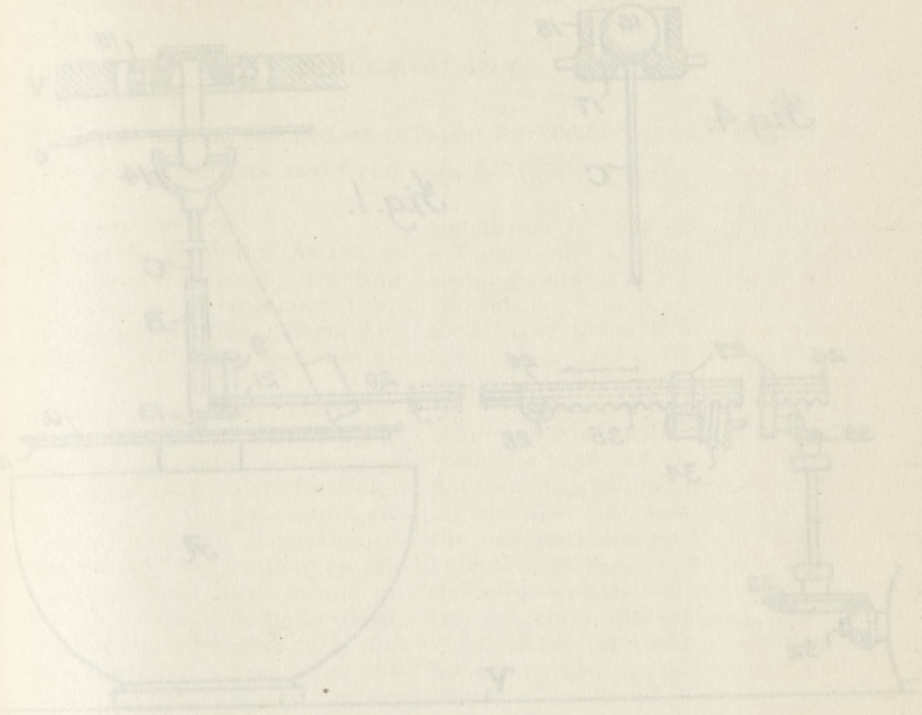

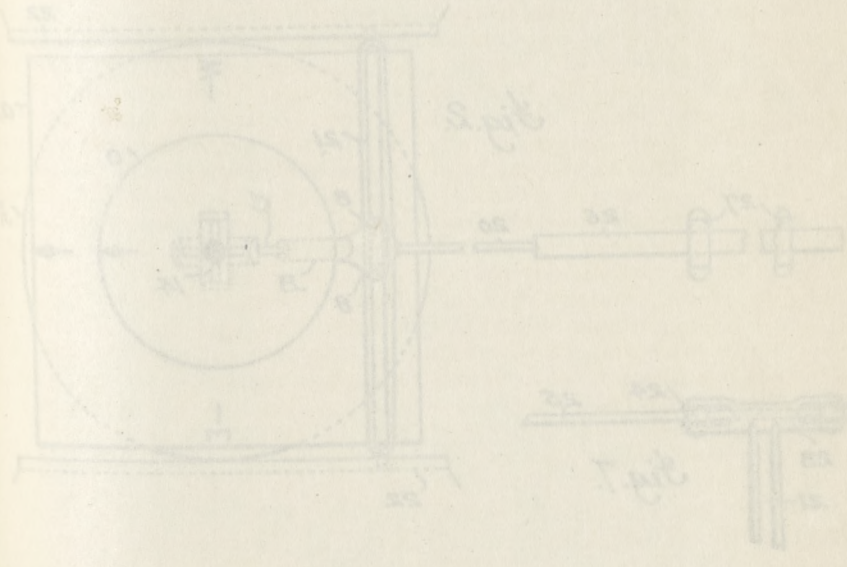

EXHIBIT P. 61.

H. MAXIM.

POSITION INDICATOR OR RECORDER.

APPLICATION FILED DEC. 15, 1914.

1,310,200.

Patented July 15, 1919.

2 SHEETS—SHEET 1.

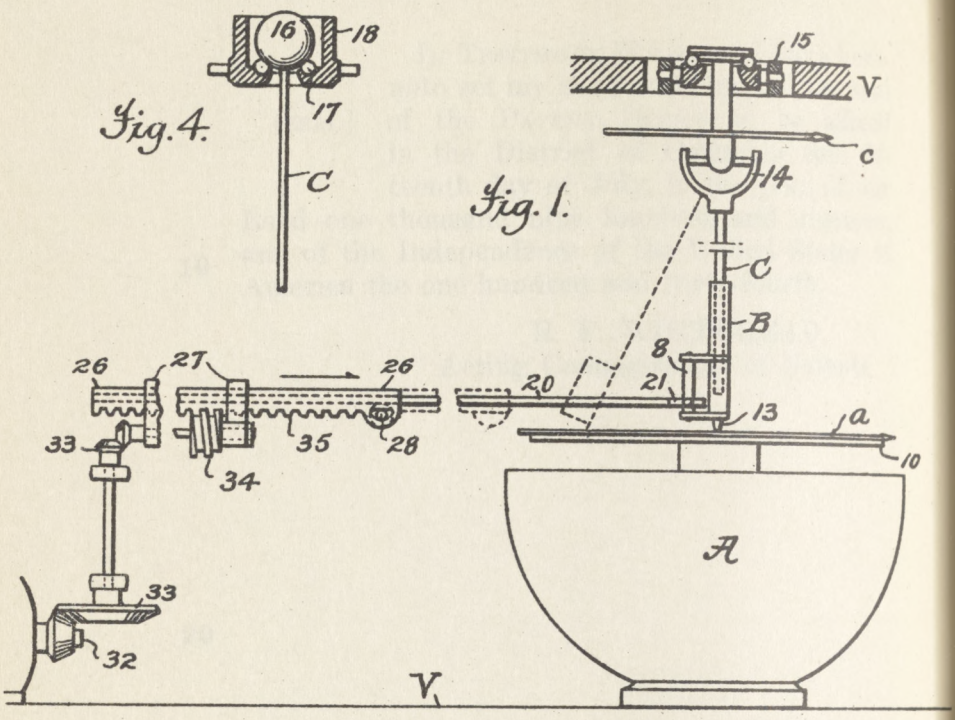

Fig. 4.

Fig. 1.

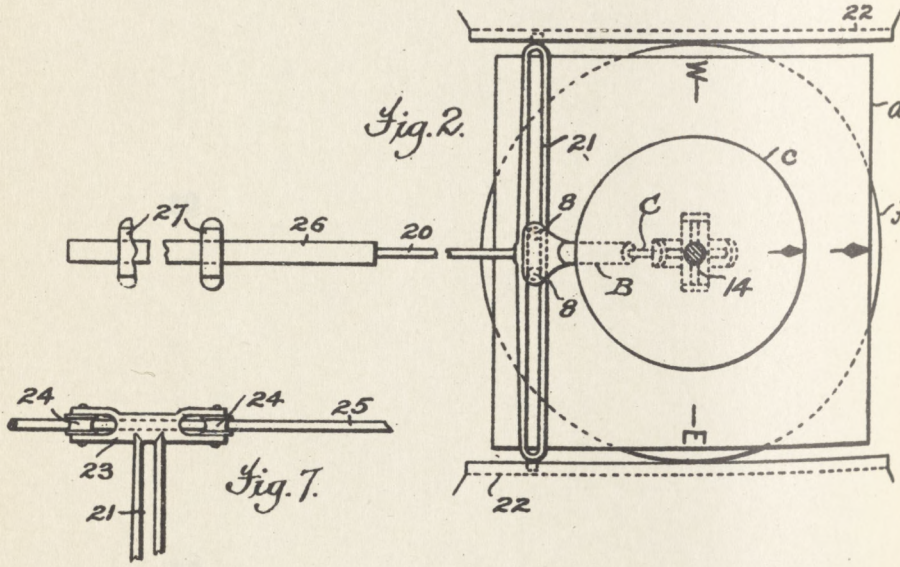

Fig. 2.

Fig. 7.

Witnesses:
Lilian Maxim.
Geo. L. Graham.

Inventor
Hudson Maxim.

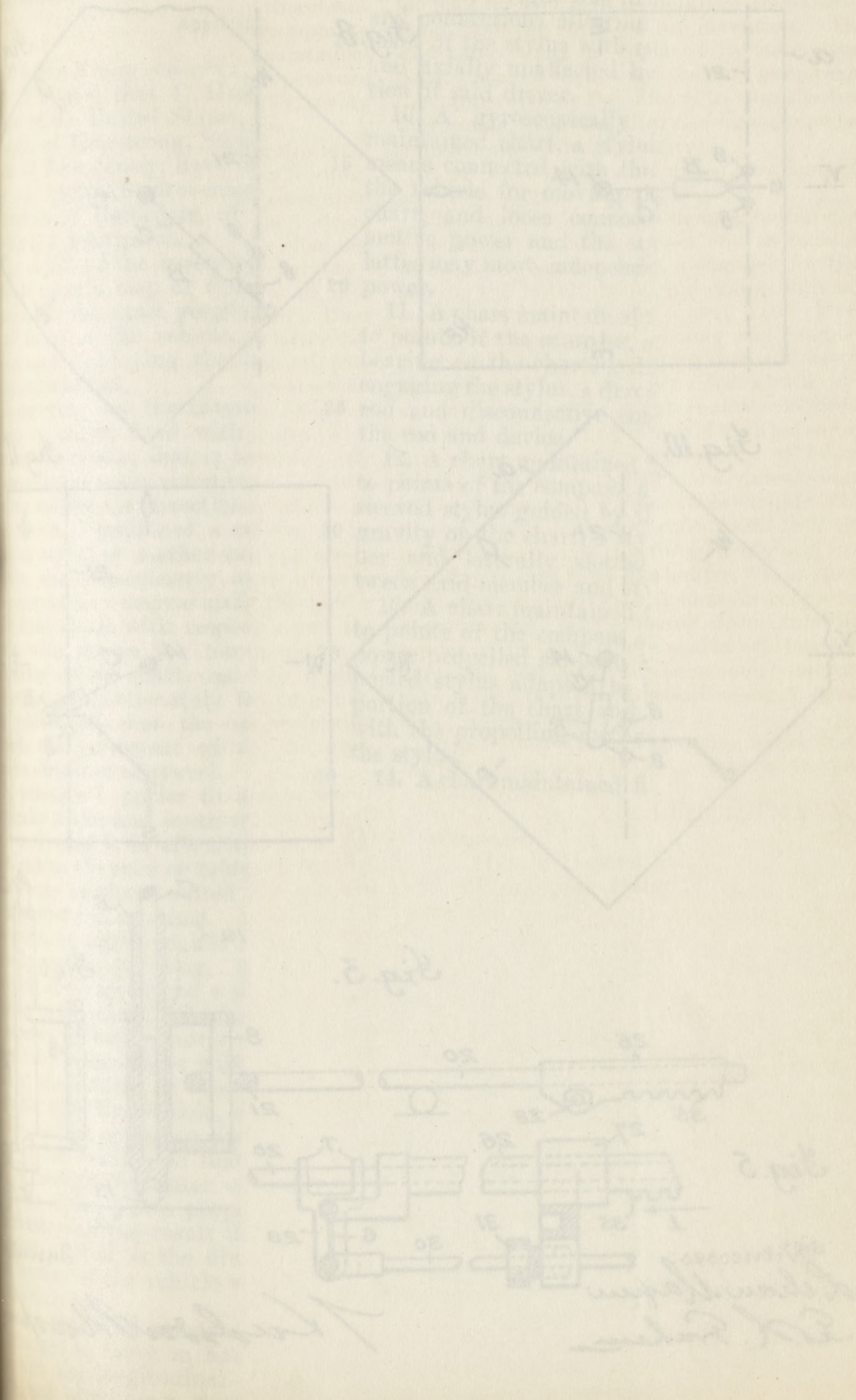

H. MAXIM.

POSITION INDICATOR OR RECORDER.

APPLICATION FILED DEC. 15, 1914.

1,310,200.

Patented July 15, 1919.

2 SHEETS—SHEET 2.

Fig. 8.

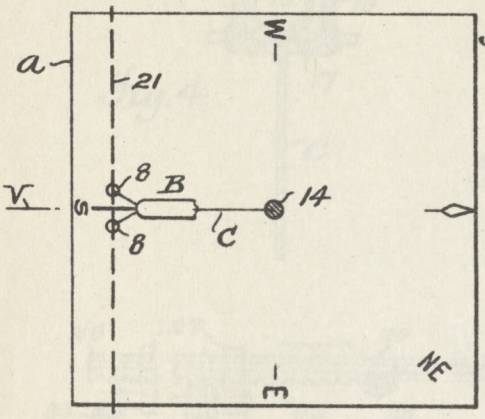

Fig. 9.

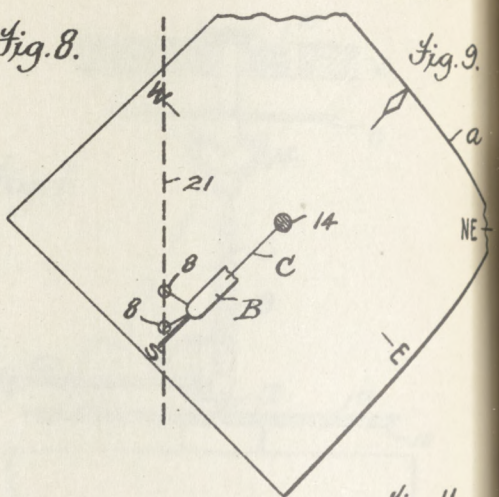

Fig. 10.

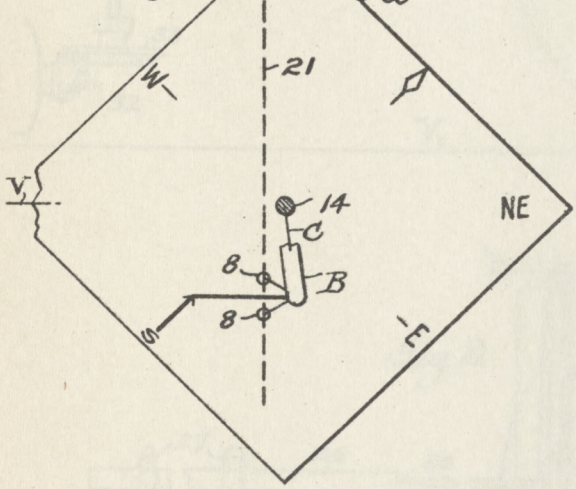

Fig. 11.

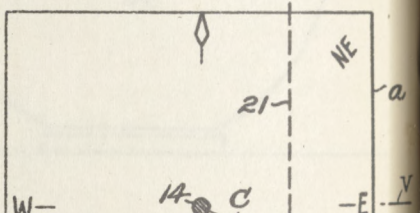

Fig. 3.

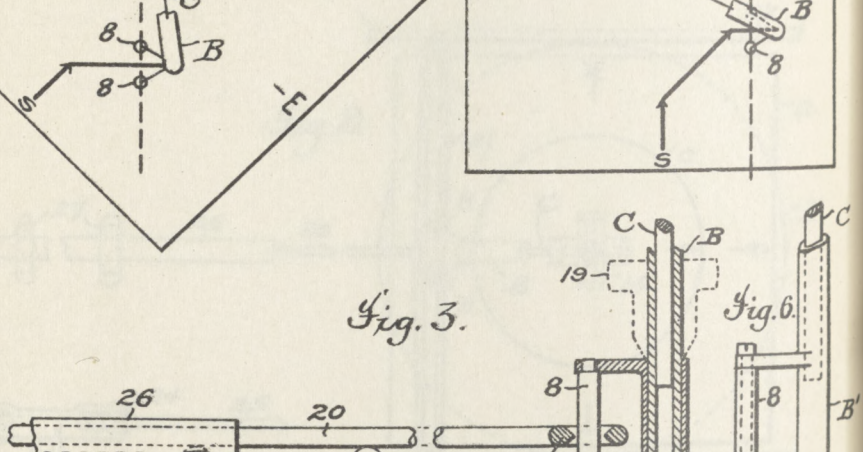

Fig. 6.

Fig. 5

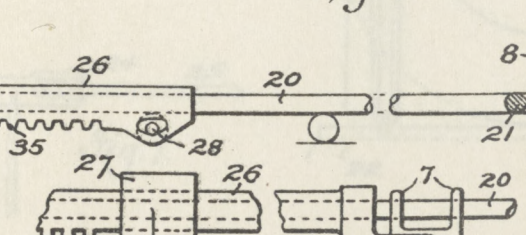

Witnesses:

Lilian Maxim

E. H. Graham

Inventor

H. Hudson Maxim

UNITED STATES PATENT OFFICE.

HUDSON MAXIM, OF HOPATCONG BOROUGH, NEW JERSEY.

POSITION INDICATOR OR RECORDER.

1,310,200. Specification of Letters Patent. Patented July 15, 1919.

Application filed December 15, 1914. Serial No. 877,328.

To all whom it may concern:

Be it known that I, HUDSON MAXIM, a citizen of the United States, residing in the borough of Hopatcong, Sussex county, and State of New Jersey, have invented certain new and useful Improvements in Position Indicators or Recorders, of which the following is a description.

The object of the invention is mainly, to indicate upon a map or chart, as nearly as practicable, the exact geographical position at all times of the vehicle, vessel or other conveyance employing the indicator, especially submarines.

In carrying out the invention, I employ a map or chart, fixed with respect to the mariner's compass, that is to say the north of the chart is maintained in its north position no matter the direction of the vehicle, with which is combined a recording or indicating stylus or marker supported by the vehicle, and consequently movable with it with respect to a magnetically or gyroscopically fixed chart with respect to north and south, with means for moving the stylus or marker on the chart, one with respect to the other, proportionately to the speed of the vehicle, so that the stylus not only records the movement of the vehicle but also its direction of travel.

In practice I prefer to employ a gyroscopically north and south maintained compass, and what is in effect a mariner's compass, and on the card or table of which compass a map or chart, suited to the location, is supported and attached. Above the chart, the vessel or other vehicle supports a universally mounted long, pendulous rod, carrying at its lower end a stylus or marker bearing on the chart. Preferably, the stylus is capable of being moved over the chart by suitable connections with some operable part of the vehicle or vessel, or some part operable with the vehicle, such as the log, or the motive power or propelling mechanism of the vehicle, so that as the vehicle moves through the water or air or on the land, the stylus moves proportionately over the chart, with the result that the distance traveled, as well as the direction of travel and location of the vehicle will be indicated on the chart.

In the preferred construction, the stylus is arranged to move in line or in parallel line with the longitudinal axis of the vehicle; and whenever a change of direction of the vehicle may occur, the chart remaining magnetically or gyroscopically fixed as to north and south, the stylus also remains in a fixed position on the chart while the direction of the vehicle is changing, ready to continue its recording movement in harmony with the direction of travel of the vehicle.

The connections between the recording stylus and the operable part of the vehicle, motive power or propelling mechanism or log of a vessel in the preferred form are such that the stylus will be moved forward as the vehicle is moved forward, and they are also such that in any change of course of the vehicle or vessel, that the stylus will move or be forced to move independently of its operative part or motive power or propelling mechanism so that if the course of the vehicle be changed, however much, even if turned completely around, the stylus will remain constantly in a substantially fixed position on the map or chart, but when the vehicle moves forward again, it will continue to record the course or direction of travel of the vessel upon the map or chart. When, however, the vessel turns while moving forward, the stylus will move forward, thereby describing a curved line upon the map, corresponding to the curved course of the vessel.

The accompanying drawings illustrate a practical embodiment of the invention, in which drawings:

Figure 1, is a side elevation thereof, parts being foreshortened to accommodate the view to the sheet;

Fig. 2, is a plan view;

Fig. 3, is an enlarged vertical sectional detail;

Fig. 4, is a sectional detail of a modified form of the universal joint supporting the pendulous stylus-carrying rod;

Fig. 5, is an enlarged elevation, foreshortened, of a modified form of the clamping connection between the driving sleeve and the driven stylus-moving rod;

Fig. 6, is an elevation of a modified form of the stylus carrier;

Fig. 7, is a plan view of one end of a modified form of the anti-friction guide for the slotted head of the driven stylus-moving rod;

Figs. 8, 9, 10 and 11 are diagrams of the recording movements of the stylus.

Referring to said drawings, Figs. 1 and

2, the mariner's compass A, the gyroscope form being preferred, is supported, say on any point on the longitudinal axis of the vessel V, with its compass card or table 10, carrying the map or chart *a*, the north of the chart being fixed with respect to the north of the compass, and consequently fixed with respect to any direction or change in direction of the movement of the vessel.

The carrier B, with its recording stylus 13, bearing on the chart, is mounted at the lower end of a pendulous rod C, whose upper end is supported by the vessel on a universal joint 14, carried by gimbals 15, as is the chart, so that the stylus will constantly bear on the chart. In the modification Fig. 4, the upper end of the stylus-carrying rod C, is provided with a ball 16, which rests on a race of small balls 17, in the housing 18, that is supported and connected to the vessel through the usual gimbals as in Fig. 1, which not only provide a comparatively frictionless support for the rod C, but by reason of the gimbals maintain it constantly horizontally parallel with the compass-supported chart.

The stylus-holding carrier B, Figs. 1 to 3 and the carrier B^1, Fig. 6 is loosely sleeved on the lower end of the pendulous rod C for freedom of vertical and also turning movements thereon, so that the stylus is held solely by gravity against the surface of the chart. The weight of the carrier B and B^1 may, however, be augmented by a weighted sleeve 19, indicated by dotted lines in Fig. 3, so that its stylus 13, may not only make a stronger impression on the surface of the chart, but is rendered less liable to exterior vibration.

The lower end of the rod C, and preferably the stylus carrier B, is loosely engaged by a motive power driven rod 20, by which the stylus 13, is moved over the surface of the chart proportionately with the speed of the vessel or other vehicle. To allow, however, for the many changes in the course of the vessel, there is provided a lateral slip or sliding connection between the stylus and its driven rod 20, which, in this instance is formed by a slotted head 21, extending transversely of the vessel and of the travel of the rod. The slotted head is properly guided at each end in anti-friction runways 22, Fig. 2, and thus caused to move accurately and freely in right line with the rod. In the modification Fig. 7, the slotted head 21, is connected at each end to a guide 23 supporting separated anti-friction rolls 24, resting on and freely movable over a guide 25 fixed to the vessel. The slotted head 21, also, engages a pair of widely separated pins or studs 8, supported by arms on the stylus carrier B, so that no matter the lateral position of the stylus with respect to the longitudinal axis of the driven rod the stylus will be moved in unison therewith. The pins 8, of roller form are of a length to permit freedom of vertical movement of the stylus carrier with respect to the driving rod head 21, as well as to accommodate the connection to the roll and pitch of the vessel and also when the stylus assumes any extreme angle to the vertical in traveling over the chart.

The driven rod 20, is mounted to freely slide within a longitudinally movable driving sleeve 26, that is suitably supported and guided in a bearing 27, fixed to the vessel. The construction being such that when the vessel rotates with respect to the chart, and no appreciable forward or backward movement of the vessel occurs, the stylus will remain practically stationary on the chart due to frictional contact therewith, free sliding of the rod in the sleeve 26 being permitted until such time as the longitudinal movement of the vessel is resumed, or in other words until it proceeds on its course.

To permit this free movement of the driven rod 20, with respect to the driving sleeve 26, there is provided a suitable clutch or tight and loose connection between the two, arranged so that when the sleeve is moved longitudinally through its bearing 27, the rod will be coupled to it, and then both moved as a unit, but when the change in direction of the vessel is more rapid than the longitudinal driving movement of the sleeve, the rod will be free to move irrespective and independent of the sleeve. Such a clutch connection may be a simple ball 28 carried to roll up inclined slots in the sleeve 26, Fig. 3, but, preferably as in Fig. 5, is represented by a depending dog 29, pivoted to the sleeve 26, and having two widely separated eyes 7, embracing the rod 20, which when the dog hangs vertically with its eyes parallel with the axis of the rod, allows the rod to slide freely through them, but when the dog is moved the slightest extent out of vertical, its eyes will clutch the rod and thus positively connect the rod and sleeve together. This clutching or clamping movement of the dog to the rod 20, may be had by a stem 30, pivotally connected to the depending portion of the dog with its free end extending parallel with the sleeve, and passing slidably through a friction device represented by a stuffing box or gland 31, that is supported by the bearing 27, and made adjustable to vary the degree of friction exerted on said stem. In operation it will be obvious that, say, when the sleeve 26, is moved forward in the direction of the arrow 1, Fig. 5, the drag or friction on the stem 30, will cause the dog to be very slightly rocked, so that its eyes clamp or clutch the rod 20, thus coupling the sleeve and rod together; and that the least tendency of the rod to move independently of the sleeve, and hence of the dog, will for the time being

render the clutch of the dog ineffective. This unclutching of the dog from the rod may be rendered more effective by the use of a suitable spring 6, tending to hold the dog vertical with respect to the sleeve as soon as its driving action ceases or is sufficiently less during the turning movement of the vessel so that the stylus will remain fixed on the chart.

The driving sleeve 26, may of course be moved longitudinally proportionately to the movement of the vessel by suitable connections with the vessel's motive power, propelling mechanism or its log. Thus, for convenience of illustration, as in Fig. 1, the propeller shaft 32, is connected by a train of suitable bevel gearing 33, to drive a worm 34, that engages a worm rack 35, secured to the sleeve, to thereby convert the rotations of the propeller shaft or other driving mechanism into a longitudinal movement of the sleeve.

The stylus 13, may be an ink or pencil marker, or may be a metallic point, removably held in its carrier for change or renewal.

In operation, referring to the diagrams, Figs. 8 to 11 inclusive, assuming the stylus is located centrally at the south end of the chart *a*, and the vessel is moving due north, so long as this course is continued a straight line directed toward the north will be marked on the chart as in Fig. 8. If, after proceeding say, one hundred miles, the course of the vessel is changed to north-east as in Fig. 9, and its forward movement continued, the chart remaining with its north maintained north, the marking of the stylus will be directed to the north-east as in Fig. 10; and if after then keeping this course, say for two hundred miles, the course of the vessel be again changed to, say, due east, the continued marking of the stylus will be directed easterly as in Fig. 11. It will be noted that, not only will each point of variation of the course of the vessel be indicated in the chart, but that the distance traveled on each of its courses will be recorded.

While the present invention, as before stated, is particularly adapted to submarines, whose efficiency is enhanced by constant under-water travel, it is, however, also adapted to other vehicles such as automobiles, aeroplanes, dirigible balloons, and other conveyances in the sea, the air, and on the land, to thereby not only record the course of the vehicle, but its distance of travel, and its location at any time during the run.

While I have particularly described a stylus longitudinally movable with respect to the chart, it is obvious that the reverse may occur, that is to say, that the support for the chart, namely, the compass may be longitudinally moved with respect to the stylus, and that the latter may be simply free to move laterally. It is also apparent that the stylus may be guided by a north-maintained guide as in Fig. 1, wherein the head of the universal joint is represented as governed in position by a mariner's compass *c*, or its equivalent, just as the chart is north-maintained; the slotted head of the driving rod 20, acting as before described. It is furthermore obvious that the loose connections between the stylus and the driven rod may similarly be governed in position by a suitable compass. Many other changes and modifications will occur to those skilled in this art without effecting the scope hereof.

What is claimed is:

1. In combination, a compass chart, a carrier for the same, a stylus, and means for moving the stylus over the chart including coupling means adapted to be released on the angular displacement of said carrier in respect to said chart.

2. In combination, a compass chart, a cirrier for the same, a stylus bearing on said chart, means for moving the stylus over said chart including a coupling member releasable on change in direction of movement of said stylus, said member having a loose connection with said stylus.

3. A compass chart, a universally supported stylus bearing on the chart, and driving means having a link connection with the stylus and including clutch means automatically releasable on change in direction of movement of said stylus.

4. A chart maintained fixed with respect to points of the compass and mounted on a power-propelled support, a stylus bearing on the chart, and coupling means between said power means and stylus adapted to release when the driving action on the stylus ceases.

5. A chart maintained in a fixed position with respect to north and south, a stylus bearing on the chart, driven means for moving the stylus over the chart, and automatically disconnective connections between said means and the stylus, whereby the latter may move independently of said means.

6. A chart maintained in a fixed position with respect to north and south, a stylus bearing on the chart, driven means connected with an operable part of the vehicle for moving the stylus over the chart, and automatically disconnective connections between said means and the stylus, whereby the latter may move with the chart independent of its driver.

7. A chart maintained in a fixed position with respect to north and south, a universally mounted and movable stylus bearing on the chart, and a right line driver connected to move the stylus over the chart.

8. A chart horizontally maintained in a fixed position with respect to north and south, a stylus bearing on the chart and sup-

ported on gimbals, and means for moving the stylus over the chart, no matter what the position of the chart with respect to the stylus.

9. A chart maintained in a fixed position with respect to points of the compass, a stylus arranged to trace its movements on the chart, a right line driver for the stylus, and connections allowing the lateral movement of the stylus with respect to its driver and axially unaffected by change in direction of said driver.

10. A gyroscopically north and south maintained chart, a stylus bearing thereon, means connected with the motive power of the vehicle for moving the stylus over the chart, and loose connections between the motive power and the stylus, whereby the latter may move independently of its motive power.

11. A chart maintained fixed with relation to points of the compass, a pendulous stylus bearing on the chart, a driving rod loosely engaging the stylus, a driving device for said rod and disconnective connections between the rod and device.

12. A chart maintained fixed with respect to points of the compass, a pendulous rod, a sleeved stylus guided by the rod to bear by gravity on the chart, a stylus driving member and laterally slotted connections between said member and stylus.

13. A chart maintained fixed with respect to points of the compass and mounted on a power-propelled support, a universally supported stylus adapted to be moved to any portion of the chart and means connected with the propelling mechanism for moving the stylus.

14. A chart maintained fixed with respect to points of the compass, a stylus bearing on the chart, a driving rod loosely engaging the stylus, a driving sleeve, a dog carried by the sleeve and means for causing the dog to clutch the rod when the sleeve is moved.

15. A chart, a stylus bearing on the chart, a driving rod loosely engaging the stylus, a driving sleeve, a dog carried by the sleeve, a drag-stem for causing the dog to clutch the rod when the sleeve is moved and a spring for moving the dog to its free position whenever the driving effect of the sleeve on the stylus ceases.

16. A chart adapted to remain fixed with respect to points of the compass and mounted on a power-propelled support, a universally mounted stylus bearing on said chart, a right line driver for moving the stylus over the chart, and connections between said power means and said driver.

17. A horizontally-supported chart adapted to remain fixed with respect to points of the compass and mounted on a power-propelled support, a gimbal-supported stylus bearing on said chart, and means for moving the stylus over said chart and actuated by said power means.

18. In a position indicator, a chart maintained in fixed position with respect to points of the compass, a stylus bearing on said chart, and means for moving the stylus over the chart and adapted to move about the axis of the stylus.

In testimony whereof I have signed my name to this specification in the presence of two subscribing witnesses.

HUDSON MAXIM.

Witnesses:

LILIAN MAXIM,

GEO. H. GRAHAM.

Exhibit P. 61.

Exhibit P. 62.

EXHIBIT P. 62.

DEPARTMENT OF COMMERCE
UNITED STATES PATENT OFFICE

To all persons to whom these presents shall come, Greeting:

THIS IS TO CERTIFY that the annexed is a true copy from the records of this office of the

Letters Patent of
HUDSON MAXIM,

Number 1,310,201, Granted July 15, 1919,

for
Improvement in Position Indicators or Recorders.

IN TESTIMONY WHEREOF I have hereunto set my hand and caused the seal [SEAL] of the Patent Office to be affixed, at the City of Washington, this twenty-ninth day of May in the year of our Lord, one thousand nine hundred and twenty-eight and of the Independence of the United States of America the one hundred and fifty-second.

THOMAS E. ROBERTSON
Commissioner of Patents.

Attest:

D. E. WILSON
Chief of Division.

Government Printing Office
11-8626

Exhibit P. 62.

No. 1310201

THE UNITED STATES OF AMERICA

TO ALL TO WHOM THESE PRESENTS SHALL COME:

Whereas Hudson Maxim,
of
Hopatcong Borough, New Jersey,

has Presented to the Commissioner of Patents a Petition Praying for the Grant of Letters Patent for an Alleged New and Useful Improvement in

Position Indicators or Recorders,

A Description of Which Invention Is Contained in the Specification of Which a Copy Is Hereunto Annexed and Made a Part Hereof, and Has Complied with the Various Requirements of Law in Such Cases Made and Provided, and

Whereas Upon Due Examination Made the Said Claimant is Adjudged to be Justly Entitled to a Patent Under the Law.

Now Therefore These Letters Patent are to Grant Unto the Said Hudson Maxim, his Heirs or Assigns for the Term of Seventeen Years from the fifteenth Day of July, One Thousand Nine Hundred and nineteen, the Exclusive Right to Make, Use and Vend the Said Invention Throughout the United States and the Territories Thereof.

Exhibit P. 62.

In Testimony Whereof, I have hereunto set my hand and caused the seal [SEAL] of the Patent Office to be affixed in the District of Columbia this fifteenth day of July, in the year of our Lord one thousand nine hundred and nineteen, and of the Independence of the United States of America the one hundred and forty-fourth.

R. F. WHITEHEAD
Acting Commissioner of Patents.

EXHIBIT P. 62.

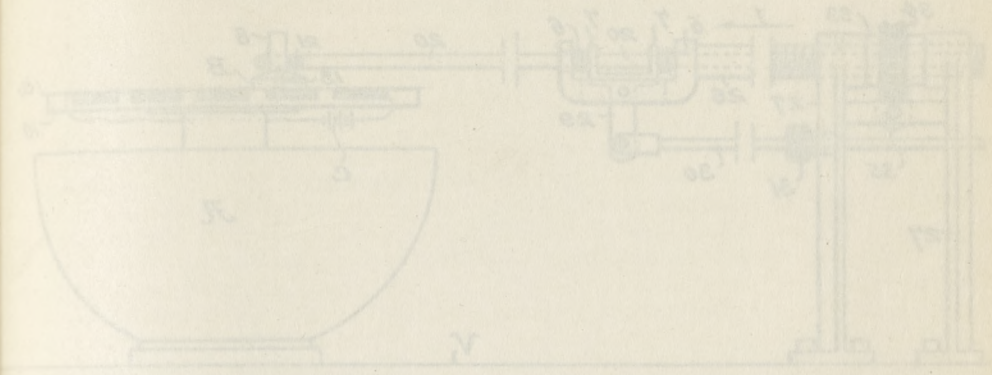

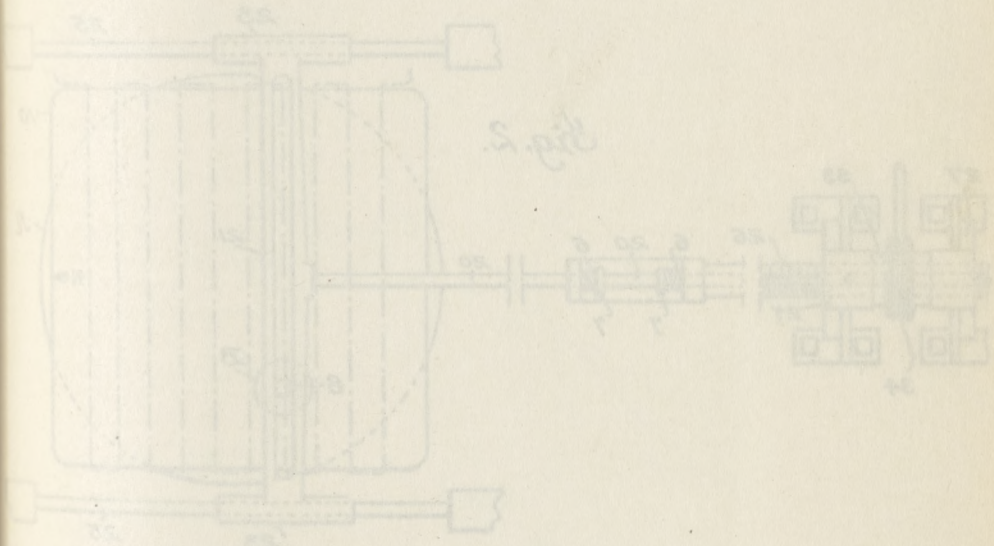

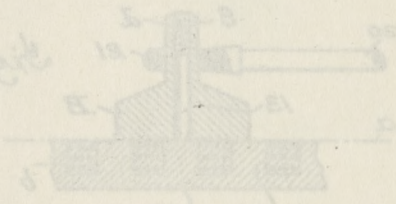

EXHIBIT P. 62.

H. MAXIM.

POSITION INDICATOR OR RECORDER.

APPLICATION FILED DEC. 29, 1914.

1,310,201.

Patented July 15, 1919.

2 SHEETS—SHEET 1.

Fig. 1.

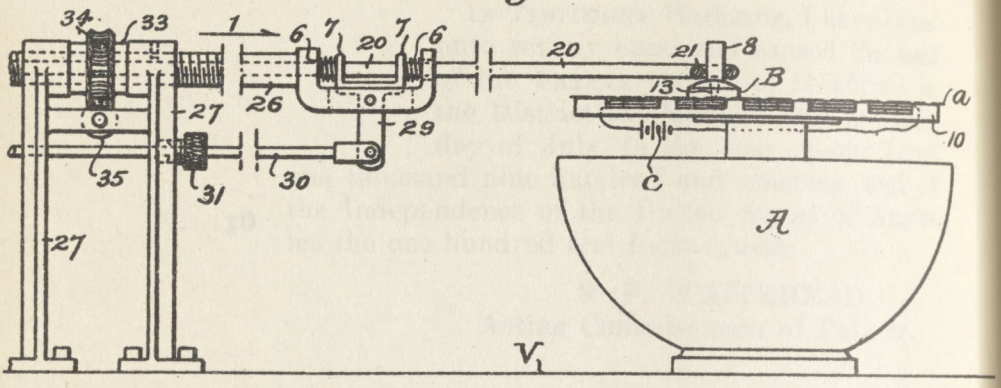

Fig. 2.

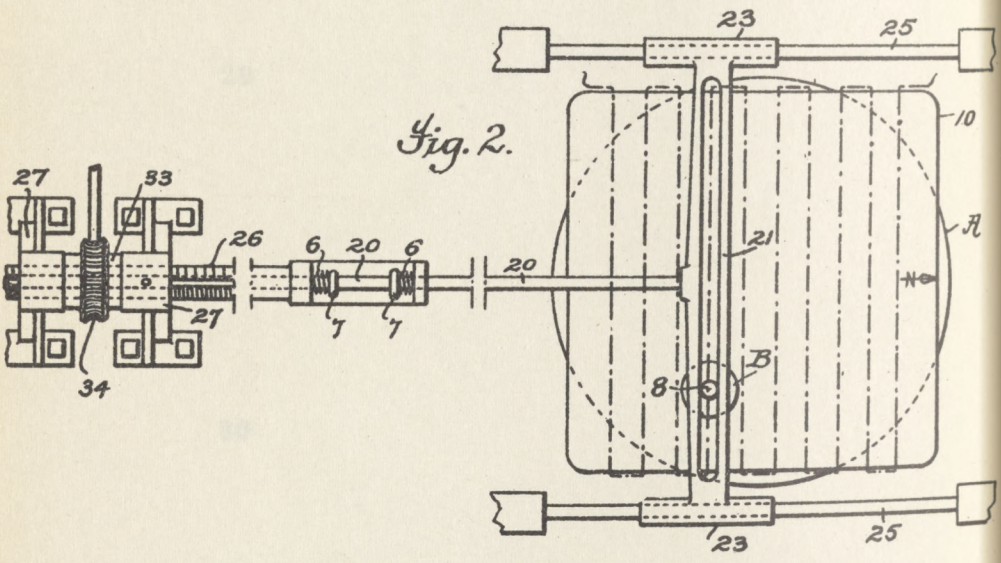

Fig. 4.

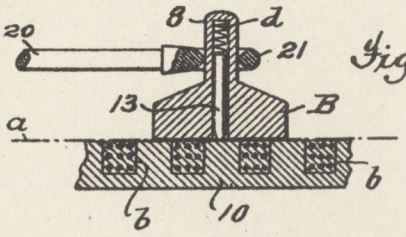

Witnesses:
Lilian Maxim.
Geo. H. Graham

Inventor
Hudson Maxim.

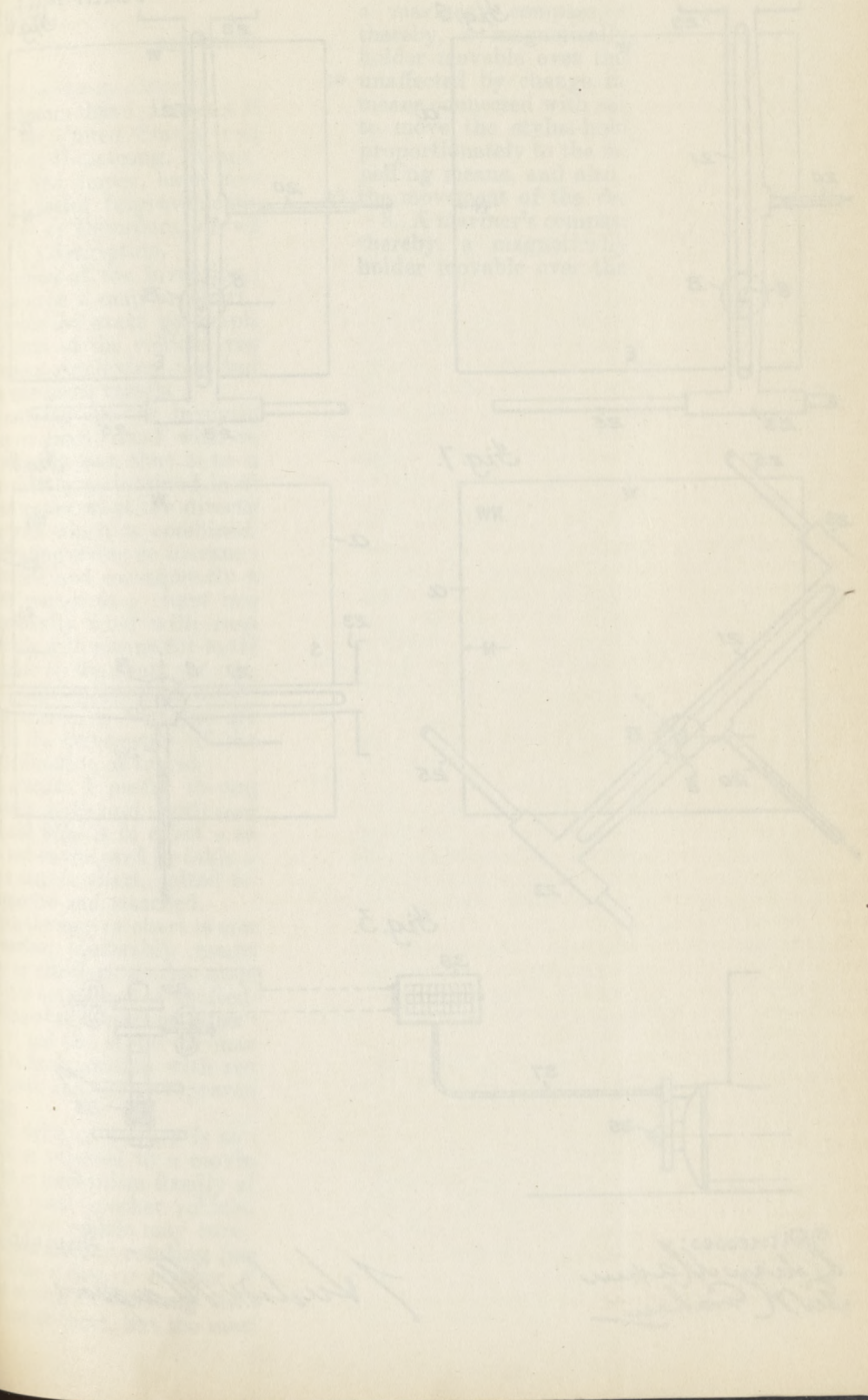

H. MAXIM.

POSITION INDICATOR OR RECORDER.

APPLICATION FILED DEC. 29, 1914.

1,310,201.

Patented July 15, 1919.

2 SHEETS—SHEET 2.

Fig. 5

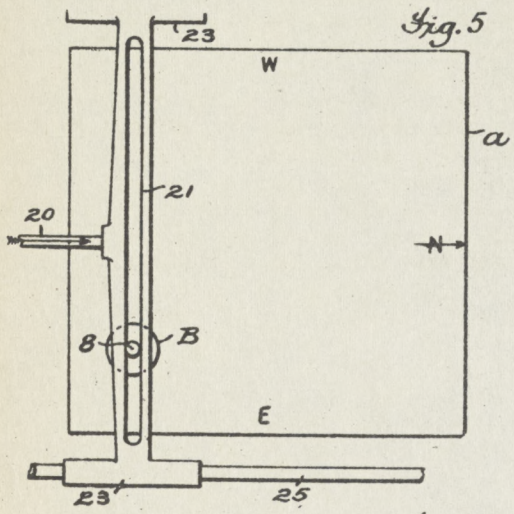

Fig. 6.

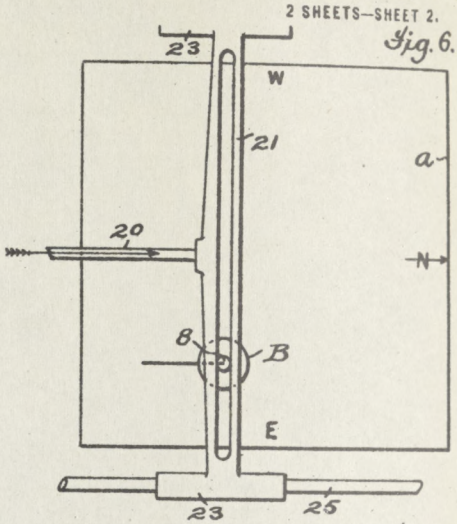

Fig. 7.

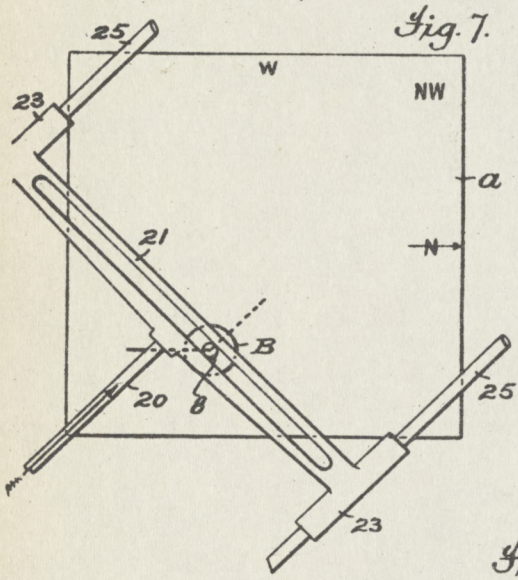

Fig. 8.

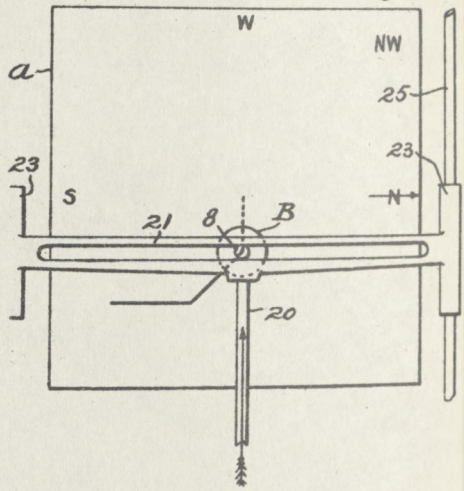

Fig. 3.

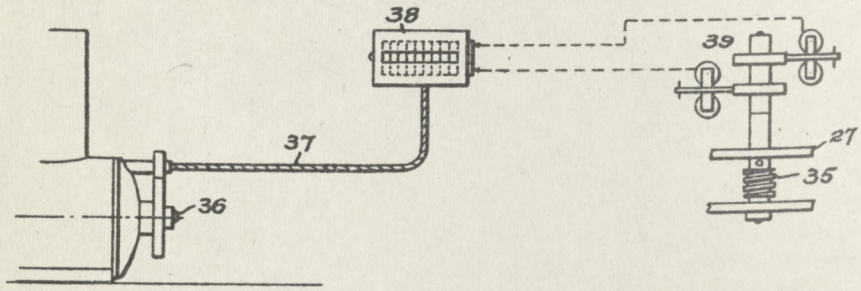

Witnesses:
Lilian Maxim
Geo. H. Graham

Inventor
J. Hudson Maxim

UNITED STATES PATENT OFFICE.

HUDSON MAXIM, OF HOPATCONG BOROUGH, NEW JERSEY.

POSITION INDICATOR OR RECORDER.

1,310,201. Specification of Letters Patent. Patented July 15, 1919.

Application filed December 29, 1914. Serial No. 879,466.

To all whom it may concern:

Be it known that I, HUDSON MAXIM, a citizen of the United States, residing in the borough of Hopatcong, Sussex county, and State of New Jersey, have invented certain new and useful Improvements in Position Indicators or Recorders, of which the following is a description.

The object of the invention is mainly to indicate upon a map or chart as nearly as practicable the exact geographical position at all times of the vehicle, vessel, or other conveyance employing the indicator, especially submarine vessels.

In carrying out the invention, I employ a map or chart, fixed with respect to the mariner's compass, that is to say the north of the chart is maintained in its north position no matter what the direction of the vehicle, with which is combined a recording or indicating stylus or marker supported by the vehicle, and consequently movable with it with respect to a chart magnetically or gyroscopically fixed with respect to north and south, with means for moving the stylus or marker on the chart, or one with respect to the other, proportionately to the speed of the vehicle, so that the stylus not only records the movements of the vehicle but also its direction of travel.

In practice I prefer to employ a gyroscopically north and south maintained compass, and what is in effect a mariner's compass, and on the card or table of which compass a map or chart, suited to the location, is supported and attached.

Upon the map or chart is mounted a stylus or marker, preferably magnetically held upon or attached to the map or chart, so that it is not moved or shifted by rolling or pitching of the vessel or other vehicle carrying it; and the stylus or marker is firmly held in fixed position with respect to north and south and thereby prevented from rotating.

The stylus or marker is so movably connected or adjusted to a moving or shifting device or mechanism fixedly attached to the boat or vessel or other vehicle, that the vessel or other vehicle may turn freely in any direction, thereby rotating partly or wholly about the stylus or marker without in the least moving or shifting the marker upon the map or chart, but the marking or shifting device is able to move the marker upon the map or chart in any direction in which the vessel or vehicle may be moving at the time, forward or backward, by its propelling mechanism.

The moving or shifting device is connected with the propelling mechanism of the vessel or vehicle by suitable reduction gears or block-work, or other device, so that the forward or backward movement of the stylus upon the map or chart is always proportionate to the speed and distance traveled by the vessel or vehicle during a given period; and without rotating or shifting the stylus upon the map or chart except in a forward or backward position in line with the longitudinal axis of the vessel or vehicle.

Any suitable translating mechanism may be employed between the propeller or the propelling mechanism of the vessel or other vehicle and the position indicator or the stylus-moving mechanism. However, I preferably employ an electrical step-by-step driver for communicating the electrical impulses from rotations of the shaft or its revolutions recorder to the stylus shifting mechanism, whereby the backward or forward movement of the stylus upon the map or chart on the line of the longitudinal axis of the vessel or vehicle is made proportionate to the forward or backward movement of the boat or vessel through the water or the vehicle over the land or through the air.

In the preferred embodiment of the invention as herein exemplified, the north-and-south maintained compass card is in the form of an electro-magnetic table, or what is known as a magnetic clutch, on the top surface of which the chart rests and to which it is properly secured; and the stylus-carrier or holder movable over the chart is in fact a soft iron block or plate acting in the nature of a keeper. The stylus or pencil is supported in a central recess in the carrier or holder and is spring pressed so as to trace or mark on the surface of the chart the movements of the holder. Obviously, the conditions of the chart-supporting plate or table and the stylus-holder may be reversed, that is to say the plate or table may be the keeper and the stylus-holder the electro-magnet. The first mentioned form, however, is preferred.

The accompanying drawings illustrate a

practical embodiment of the invention, in which drawings:

Figure 1, is a side elevation thereof, parts being fore-shortened to accommodate the view to the sheet;

Fig. 2 is a plan view;

Fig. 3 is a diagrammatic view, showing a mode of driving the stylus-marker proportionate to the speed of the propelling mechanism, or its revolutions-recorder.

Fig. 4, is an enlarged sectional detail of the stylus-holder and the magnetic plate or table.

Figs. 5, 6, 7 and 8 are diagrams of the recording movements of the stylus.

Referring to said drawings, Figs. 1 and 2, the mariner's compass A, the gyroscope form being preferred, is supported, say at any point on the longitudinal axis of the vessel V, with its compass card or table 10, carrying the map or chart *a*, the north of the chart being fixed with respect to the north of the compass, and consequently fixed with respect to any direction or change in direction of the movement or course of the vessel.

The table 10 is in its preferred construction, an electro-magnet, and to this end is formed with a number of parallel equi-distant grooves *b*, see Fig. 4, in which is properly wound a suitable number of coils of the required sized silk or other covered insulated wire in circuit with a generator or battery *c*, Fig. 1.

The carrier or holder B, supporting the stylus or marker 13, is a round or otherwise shaped disk or plate of soft iron and in effect forms the keeper for the electro-magnet plate. The under surface of the holder bears upon the upper surface of the plate except that the thin paper map or chart *a*, is interposed between the two surfaces, and hence the magnetism of the plate must be great enough to affect the holder or keeper B, to hold it fixed on the map whenever the course of the vessel is being changed and yet permit it to be moved over the surface of the map and the plate on the application of sufficient force thereto.

The stylus or marker 13, in the present instance is a pencil extending axially in the holder B and has a suitable spring *d*, to force its lower end against the chart to mark or trace the movements of the holder.

The center of the holder has a vertical stem 8, which is loosely engaged by a motive power driven rod 20, by which the holder with its stylus 13 is moved over the surface of the chart proportionately with the speed of the vessel or other vehicle. To allow, however, for the many changes in the course of the vessel, there is provided a lateral slip or sliding connection between the stylus or its holder and its driven rod 20, which, in this instance is formed by a slotted head 21, extending transversely of the longitudinal axis of the vessel and of the travel of said rod 20. The slotted head 21, is suitably guided and supported at each end by anti-friction sleeves or runners 23 mounted on rods 25 fixed to the vessel on opposite sides of the compass plate and extending in lines parallel with the longitudinal axis of the vessel.

The driven rod 20, is mounted to freely slide within a longitudinally movable driving sleeve or tube 26, that is suitably supported and guided in one or more properly disposed bearings 27, fixed to the vessel. The construction being such that when the vessel rotates with respect to the chart, and no appreciable forward or backward movement of the vessel occurs, the stylus will remain practically stationary on the chart, owing to the free sliding of the rod 20, in the driving sleeve 26, until such time as the longitudinal movement of the vessel is resumed, or in other words until it proceeds on its course.

To permit this free movement of the driven rod 20, with respect to the driving sleeve 26, there is provided a suitable clutch or tight and loose connection between the two, arranged so that when the sleeve is moved longitudinally through its bearing or bearings 27, the rod will be coupled to it, and the both moved as a unit, but when the change in direction of the vessel is more rapid than the longitudinal driving movement of the sleeve, the rod will be free to move irrespective and independent of the sleeve. Such a clutch connection is represented by a depending dog 29, pivoted to the sleeve 26, and having two widely separated eyes 7, embracing the rod 20, which when the dog hangs vertically with its eyes parallel with the axis of the rod, allows the rod to slide freely through them, but when the dog is moved the slightest extent out of vertical, its eyes will clutch the rod and thus positively connect the rod and sleeve together. This clutching or clamping movement of the dog to the rod 20, may be had by a stem 30, pivotally connected to the depending portion of the dog with its free end extending parallel with the sleeve, and passing through a friction device represented by a stuffing box or gland 31, that is supported by the bearing 27, and made adjustable to vary the degree of friction exerted on said stem. In operation it will be obvious that, say, when the sleeve 26, is moved forward in the direction of the arrow 1, Fig. 1, the drag or friction on the stem 30, will cause the dog to be very slightly rocked, so that its eyes cramp or clutch the rod 20, thus coupling the sleeve and rod together; and that the least tendency of the rod to move independently of the sleeve, and hence of the dog, will for the time being render the

clutch of the dog ineffective. This unclutching of the dog from the rod may be rendered more effective by the use of suitable springs 6, tending to hold the dog vertical with respect to the sleeve as soon as its driving action ceases or is sufficiently less during the turning movement of the vessel so that the stylus will remain fixed on the chart.

The driving sleeve 26, may of course be moved longitudinally proportionately to the movement of the vesseel by suitable connections with the vessel's motive power, propelling mechanism or its log.

Thus for convenience of illustration, and for showing one of the many modes of obtaining the movement of the stylus over the chart proportionate to the speed of the vessel, the driving sleeve as shown in Figs. 1 and 2, is screw-threaded more or less its entire length with the threads of which engages a nut 33, mounted between the bearings 27, and having a worm wheel 34, in gear with a worm 35, supported in cross brackets of said bearings, so that rotations of the worm and worm wheel and its nut will move the driving sleeve 26 longitudinally through its bearings either forward or backward according as the propelling mechanism moves the vessel either forward or backward. In the diagram, Fig. 3, the shaft 36, of the propelling engine is connected by proper gearing through say a flexible shaft 37 to the revolutions-recorder 38, from which by suitable electrical and mechanical translating devices 39, not shown in detail but in conventional form, forward or backward rotations are imparted to the spindle to which the worm 35 is fixed.

In operation, referring to the diagrams, Figs. 5 to 8 inclusive, assuming the stylus-holder B, to be at the south-eastern portion of the chart *a*, and the vessel is moving substantially due north, so long as this course is continued, a straight line directed northward will be marked on the chart, the holder having been moved from the position shown in Fig. 5, to that shown in Fig. 6, making a straight line as indicated in the latter view. If, after proceeding, the course of the vessel is changed to north-west, as in Fig. 7, and its forward movement continued, the chart remaining with its north maintained north, the stylus-holder remaining fixed with respect to the chart during such change in the course of the vessel, the marking of the stylus will be directed to the north-west as indicated by dotted lines in said Fig. 7; and if then, after keeping this north-west course, say for many miles, the course of the vessel be again changed to, say due west, the continued marking of the stylus will be directed westerly as indicated in Fig. 8. It will be noted that not only will each point of variation of the course of the vessel be indicated on the chart, but that the distance traveled on each of its courses will be recorded.

While the present invention, as before stated, is particularly adapted to submarines, whose efficiency is enhanced by constant under-water travel, it is, however, also adapted to other vehicles such as automobiles, aeroplanes, dirigible balloons, and other conveyances in the sea, the air, and on the land, to thereby not only record the course of the vehicle, but its distance of travel, and its location at any time during the run.

The clutch driving and slip connections herein shown and described but not claimed, are shown, described and claimed in a copending application Serial No. 877,328, filed December 15, 1914.

What is claimed is:

1. In a position indicator, a chart adapted to be maintained in fixed position with respect to points of the compass, a stylus magnetically held on the chart against axial movement and means for moving one with respect to the other.

2. In a position indicator, a chart, means for maintaining the chart in fixed position with respect to points of the compass, a stylus supported by and magnetically held thereon against axial movement, a power-shaft, and means for moving the stylus over the chart operated by said power-shaft.

3. In a position indicator, a movable support, an electro-magnetic plate provided with a chart, an armature supported thereby and having a stylus bearing on the chart, said chart and plate being maintained in fixed position with respect to points of the compass, and means for moving the armature and stylus over the plate.

4. In a position indicator, a chart, a plate provided with a plurality of magnetized poles for supporting the same, and a stylus supported by and movable on said chart and magnetically retained thereon against axial movement.

5. A combined mariner's compass and position indicator, consisting of a map or chart, means holding the map or chart in a fixed position with respect to the points, of the compass, a marker or stylus magnetically held on the chart against axial movement, together with means whereby the stylus or marker is moved, backward or forward upon the map or chart, on a line parallel to the longitudinal axis of the vehicle, at a rate of movement proportionate to the rate of movement of the vehicle, whereby the direction traveled by the vehicle and its geographical position is indicated on the map or chart.

6. In combination with propelling means, a north and south maintained chart, a magnetically attracted stylus-holder supported by and movable over the chart, and axially

unaffected by change in its direction, and means connected with said propelling means to move the stylus holder over the chart proportionately to the movement of said propelling means.

7. In combination with propelling means, a mariner's compass, a chart supported thereby, a magnetically attracted stylus-holder movable over the chart and axially unaffected by change in its direction, and means connected with said propelling means to move the stylus-holder over the chart proportionately to the movement of the propelling means, and also in the direction of the movement of the vessel.

8. A mariner's compass, a chart supported thereby, a magnetically attracted stylus-holder movable over the chart and axially unaffected by change in its direction coincident with the longitudinal axis of the vehicle carrying the chart, means connected with the propulsive agent of the vehicle by which the stylus-holder is moved over the chart proportionate to the movement of such propulsive agent, and loose connections between said stylus-holder and its mover whereby when the vehicle is turned in its course the stylus-holder remains stationary on the chart.

In testimony whereof I have signed my name to this specification in the presence of two subscribing witnesses.

HUDSON MAXIM.

Witnesses:

ELISHA T. EVERETT,

GEO. H. GRAHAM.

Exhibit P. 62.

Exhibit D. 1.

New Jersey Court of Errors and Appeals

JAMES G. GRAHAM, Trustee in Bankruptcy of Maxim Corporation, *Plaintiff-Appellee,* *vs.* THERESA LOUISE FLEISSNER, CHRISTIAN FLEISSNER, JR., and FIDELITY UNION TRUST COMPANY, as Executors of the Last Will and Testament of CHRISTIAN FLEISSNER, Deceased, *Defendants-Appellants.*	*Action at Law.* *Appeal from Supreme Court.*

BRIEF FOR DEFENDANTS-APPELLANTS.

Statement of the Case.

The appeal brings before this court a judgment of the Supreme Court against the appellants, the defendants below, for the sum of $22,732.64 (R., Vol. 1, p. 38).

The action was brought by appellee as trustee in bankruptcy of Maxim Corporation against Christian Fleissner, appellants' testator, to enforce an assessment on 6,375 shares of the common stock of the company levied under an order made by a referee in bankruptcy in bankruptcy proceedings against the company in the United States District Court for the Southern District of New York (Complaint, R., Vol. 1, p. 4, l. 15 to p. 7, l. 20). Fleissner died December 31, 1928, and the action was revived against the appellants (R., Vol. 1, pp. 35, 36).

New Jersey State Library

Maxim Corporation was formed under the laws of the State of Delaware on August 24, 1915, under the name of Maxim Munitions Corporation for the purpose of manufacturing arms and munitions in connection with the World War (Ex. P. 1, R., Vol. 2, p. 283). The authorized capital was 1,000,000 shares of a par value of $10.00 a share (R., Vol. 1, p. 4, l. 15). The company, by resolution of its board of directors, on September 4, 1915, purchased certain inventions and patents relating to arms and munitions and services and agreements from Hudson Maxim, the well-known inventor, and others, and in payment thereof, issued to the promoters 999,965 shares of its stock. By this resolution, the directors fixed a fair value upon the assets so acquired of $9,999,650 (Exs. P. 3, P. 4, P. 5, P. 6, P. 7, P. 8, P. 9, P. 10, P. 14, P. 16, P. 20, P. 60, P. 61, P. 62, P. 63, R., Vol. 2, pp. 286, 290, 292, 297, 298, 303, 310, 319, 322, 329, 462, 466, 470, 474).

The certificates in purchase of these assets were issued to the promoters or on their order as fully paid and non-assessable and the stock certificates state on their face "fully paid and non-assessable" (Ex. P. 36, R., Vol. 2, p. 398).

The promoters returned into the treasury of the company 300,000 shares of the stock so issued for the purpose of raising additional working capital (R., Vol. 1, p. 72, l. 39; pp. 118 to 119, 125). The stock so returned was listed by the company on the New York Curb Exchange for the purpose of raising additional working capital and there dealt in at about $8.00 a share (Ex. P. 29, R., Vol. 2, p. 339, 340, l. 22; Vol. 1, p. 73, ll. 30, 37). The stock owned by the promoters was escrowed by them under written agreement to prevent competition with the sale of the treasury stock (Ex. P. 37, R., Vol. 2, p. 399;

Ex. P. 29, R., Vol. 2, p. 339; R., Vol. 1, pp. 74, 117, 118, 126).

In February, 1916, to raise further working capital to finance munitions contracts with the Danish, Greek, Italian and Russian Governments, the promoters or managers donated 510,000 shares of the stock owned by them to the company. It is admitted that this stock belonged to the promoters and was donated to raise further working capital (R., Vol. 1, p. 127, ll. 33 to 40; p. 128, ll. 1 to 13, 30 to 40; p. 129, ll. 4 to 13, l. 35; p. 93, ll. 22 to 32; p. 97, l. 31; p. 117, l. 35 to p. 118, l. 17; Ex. P. 29, R., Vol. 2, p. 339). A syndicate agreement was executed with certain subscribers. Among these was one Theodore D. Palmer who purchased 12,750 shares of the promoters' stock for $5,000.00, the consideration going to the company (Ex. P. 29, R., Vol. 2, pp. 339, 343; R., Vol. 1, p. 93, l. 10; p. 95, ll. 4 to 18). In lieu of stock certificates, the trustee, who was holding the promoters' stock certificates in escrow, issued his certificates to the purchasers, including Palmer (Ex. P. 30, R., Vol. 2, p. 344; R., Vol. 1, p. 96, ll. 15 to 40; p. 92, l. 36 to p. 93, l. 20).

On December 7, 1916, Palmer sold one-half of the stock purchased by him from the promoters, 6,375 shares, to Christian Fleissner. The assessment in suit was made upon these shares (R., Vol. 1, p. 148, l. 33; p. 149, l. 15; p. 150, l. 3; Ex. P. 40, R., Vol. 2, p. 410).

On February 19, 1917, Fleissner donated one-half of this stock to the treasury of the company (R., Vol. 1, p. 151, l. 12; p. 152, ll. 30 to 36; Ex. P. 41, R., Vol. 2, pp. 411, 412; Ex. P. 45, R., Vol. 2, p. 420).

Later Fleissner authorized the company to sell all but 957 shares of the 6,375 shares purchased by him from Palmer and loaned the proceeds to the company on its notes (R., Vol. 1, pp. 155, 156, 157, 158; Exs. P. 42, P. 43, P. 44, P. 45; R., Vol. 2, p. 413 to p. 420).

The company paid interest on these notes to Fleissner (Ex. P. 46, R., Vol. 2, p. 421; R., Vol. 1, p. 160, l. 12). Fleissner filed proof of claim after adjudication of bankruptcy for the balance of the notes of some $1,500.00 (Ex. P. 58, R., Vol. 2, p. 460).

On August 23, 1917, the stock certificate for the remaining 957 shares purchased by Fleissner from Palmer was issued to Fleissner and was sold by him on the market and transferred out of his name on October 30, 1917 (Ex. P. 36, R., Vol. 2, p. 398; R., Vol. 1, p. 157, l. 20; p. 108, ll. 10 to 34; Ex. D. 1; R., Vol. 2, p. 475).

It is admitted that the 510,000 shares of which the 6,375 shares purchased by Fleissner from Palmer were a part, belonged to the promoters and were contributed by them to raise additional working capital, the proceeds from the sale being turned in directly to the company instead of having the shares returned by the promoters to the company and sold by the company.

Fleissner purchased 2,000 additional shares under syndicate agreements but these were part of the 300,000 shares turned back into the treasury of the company by the promoters, and it is admitted that they are not subject to assessment. (Ex. P. 38, R., Vol. 2, p. 403; Ex. P. 49, R., Vol. 2, p. 424; R., Vol. 1, p. 138, l. 3, p. 139, l. 10; Ex. P. 39, R., Vol. 2, p. 409). All of the stock purchased by Fleissner was sold or disposed of by him some one and one-half years prior to

the bankruptcy proceedings and he had ceased to be a stockholder of record on the books of the company (Ex. P. 36, R., Vol. 2, p. 398; R., Vol. 1, p. 108, ll. 10 to 34; Ex. D. 1, R., Vol. 2, p. 475; Ex. P. 39, R., Vol. 2, p. 409).

The company engaged in the manufacture of munitions of war until after the Armistice. On March 10, 1919, it changed its name to Maxim Corporation (Ex. P. 50, R., Vol. 2, p. 430). On May 29, 1919, an involuntary petition in bankruptcy was filed against it in the United States District Court for the Southern District of New York and on June 18, 1919, the company was adjudicated a bankrupt (Complaint, R., Vol. 1, p. 4, l. 36; Ex. P. 51, R., Vol. 2, p. 430).

The order levying the assessment against Fleissner made by the referee in bankruptcy in the bankruptcy proceedings was made some six years later on the trustee's petition. The ground for the application was that the assets in purchase of which the stock was originally issued were grossly overvalued and in fact without value. Notice of the proceeding was mailed to Fleissner on June 24, 1925 (Ex. P. 53, R., Vol. 2, pp. 431, 433, 434; R., Vol. 1. p. 197, l. 30; p. 198, l. 15; p. 204, l. 20 to p. 205, l. 40; Ex. P. 59, R., Vol. 2, p. 461). Fleissner did not appear in these proceedings. Demand for payment of the assessment was mailed to Fleissner on August 28, 1926 (Ex. P. 57, R., Vol. 2, p. 459; R., Vol. 1, p. 206).

GROUNDS OF APPEAL.

The appellants rely upon the following grounds of appeal which will be dealt with under the following Points. In some cases several relate to the same fundamental error and in those cases we will group them under the Point to which they relate.

POINT I.

The Court erroneously denied defendants' motion to strike out the complaint under the provisions of the statute of the State of New Jersey entitled "A supplement to an act entitled 'An Act Concerning Corporations' (Revision of 1896) approved April 21, 1896", approved March 30, 1897, Chapter 50, P. L. 1897, p. 124. (First Ground of Appeal, R. Vol. 1, p. 39, l. 31; Motion, R. Vol. 1, pp. 51-57.)

POINT II.

The Court erroneously struck out the seventh separate defense of the defendants' answer. (Second Ground of Appeal, R. Vol. 1, p. 40, l. 1; R. Vol. 1, p. 57; Answer, R. Vol. 1, p. 22, l. 13.)

POINT III.

The Court erred in overruling defendants' objection in point of law to the complaint reserved in defendants' answer. (Third Ground of Appeal, R. Vol. 1, p. 40, l. 4; Motion, R. Vol. 1, pp. 52, 57; Answer, R. Vol. 1, p. 24, l. 10.)

POINT IV.

The Court erred in denying defendants' motion for a non-suit. (Fourth Ground of Appeal, R. Vol. 1, p. 40, l. 11; Motion for non-suit, R. Vol. 1, pp. 241-247.)

POINT V.

The Court erred in denying defendants' motion for a direction of a verdict for defendants. (Fifth Ground of Appeal, R. Vol. 1, p. 40, l. 14; Motion for direction of verdict, R. Vol. 1, p. 247.)

POINT VI.

The Court erroneously refused defendants' seventh request to charge the jury. (7th Ground of Appeal, R. Vol. 1, p. 40, l. 25; Requests, R. Vol. 1, p. 276, l. 26; Charge, R. Vol. 1, p. 266, l. 29.)

This request was as follows:

> "7. Even if you find that the defendant had actual knowledge of the fact that the stock which he purchased from Theodore Palmer was originally issued to the promoters in return for property at a gross overvaluation, or notice of such facts as would put a reasonable man on inquiry, the defendant is not liable for any assessment on any shares so purchased by him which he later sold and which were actually transferred on the books of the company prior to the time that the company was decreed insolvent in the bankruptcy proceedings in the United States District Court for the Southern District of New York."

The same argument applies to the refusal of the Court to charge defendant's Eighth, Tenth, Eleventh, Fourteenth and Nineteenth Requests (8th, 9th, 10th, 12th, 16th Grounds of Appeal, R., Vol. 1, pp. 41, 42, 43; Requests, R., Vol. 1, pp. 277-279; Charge, R., Vol., 1, p. 266) which are as follows:

> "8. In determining whether the defendant's shares or any part of them were transferred out of his name on the books of the

company, you must consider the transfer sheets and ledger sheets which are in evidence and marked Exhibits P. 35 and P. 37-1."

"10. In determining the number of shares purchased by the defendant from Theodore Palmer for which the assessment is asked by the plaintiff, you must deduct those shares which he sold for the benefit of the company and the proceeds of which he loaned to the company."

"11. The defendant cannot be assessed on those shares of stock which he originally purchased from Theodore Palmer but which you find under the evidence he subsequently sold or permitted to be sold for the benefit of the company lending the proceeds to the company in return for its notes where the transfers of the shares so sold were made on the books of the company prior to the decree of insolvency in the bankruptcy proceedings."

"14. The defendant cannot be held liable for any assessment on any of the shares of stock which he purchased from Theodore Palmer but which subsequently he returned to the treasury of the company prior to the decree of insolvency in the United States District Court for the Southern District of New York."

"19. If you find that the defendant sold the shares of stock which he purchased from Theodore Palmer and that these shares of stock were transferred to the purchaser or purchasers on the books of the company prior to the decree of insolvency made in the United States District Court for the Southern District of New York, then you must find for the defendant notwithstanding the order for assessment made in the District Court."

POINT VII.

The Court erroneously charged the jury that the Bankruptcy Court had the power to levy the assessment in this case. (19th Ground of Appeal, R. Vol. 1, p. 44, l. 10; Charge, R. Vol. 1, p. 253, l. 30; Exception, R. Vol. 1, p. 267, l. 18.)

The language of the Court was as follows:

> "It has been decided by a number of decisions in the Federal and State courts that the court which has the authority to levy such an assessment (and I charge you that the bankruptcy court has the power to levy the assessment in this case) may take into consideration and should take into consideration in their decision of the matter all matters which are general to all the stockholders, and that after the assessment has been levied the only defenses which can be interposed are those defenses which are peculiar to the individual himself who is being sued for the assessment; and that is substantially stated in the order of the referee in bankruptcy" (Charge, R., Vol. 1, p. 253, l. 30).

POINT VIII.

The Court erroneously charged the jury that there were only two principal defenses, (1) That Fleissner paid full value and (2) That he purchased the stock without notice of the overvaluation. (20th Ground of Appeal, R. Vol. 1, p. 44, l. 24; Charge, R. Vol. 1, p. 254, l. 18; Exception, R. Vol. 1, p. 267, l. 29.)

The language of the Court was as follows:

> "Two principal defenses are suggested in this suit only which are personal. I say 'suggested.' I mean suggested by what has taken place in this trial or suggested by the evidence, which are purely personal to Mr. Fleissner, or since his death to his repre-

sentatives, who stand in his shoes in this case; and one is that he paid full value for the stock and the other is that he had no notice of the assessment against him or of the proceedings which resulted in the assessment against him." (Charge, R., Vol. 1, p. 254, l. 18.)

POINT IX.

The Court erroneously refused defendants' seventeenth request to charge the jury. (15th Ground of Appeal, R. Vol. 1, p. 42, l. 40; Requests, R. Vol. 1, p. 278, l. 38; Charge, R. Vol. 1, p. 266.)

This request was as follows:

"17. The order for assessment made in the bankruptcy proceedings in the United States District Court for the Southern District of New York is not conclusive or binding upon the defendant as to the number of shares for which the defendant can be assessed."

POINT X.

The assessment against Fleissner made by the United States District Court for the Southern District of New York in the bankruptcy proceedings to which Fleissner was not made a party by the service of due process, was invalid in that it deprived Fleissner of his property without due process of law in violation of his constitutional rights under Article 1, Section 1, of the New Jersey Constitution and the Fifth and Fourteenth amendments of the United States Constitution and the judgment of the Court below based upon this assessment was error. (41st and 43rd Grounds of Appeal, R. Vol. 1, pp. 49, 50; Motion for non-suit, R. Vol. 1, p. 242, l. 34;

Motion for direction of verdict, R. Vol. 1, p. 247.)

These grounds of appeal are as follows:

"41. The judgment of the Court was erroneous in that it was based upon an assessment and an order levying assessment made by the United States District Court for the Southern District of New York against Christian Fleissner in the bankruptcy proceedings against Maxim Corporation, which assessment and order levying assessment were invalid in that they deprived Christian Fleissner of his property without due process of law."

"43. The Court erred in giving effect to the assessment and order levying assessment made in the United States District Court for the Southern District of New York against Christian Fleissner in the bankruptcy proceedings against Maxim Corporation in that said assessment and order levying assessment were invalid in that they deprived Christian Fleissner of his property without due process of law."

POINT XI.

The Court erroneously permitted testimony as to the value of the assets purchased by the corporation from the promoters for which the corporate stock was issued.

The 21st, 23rd to 28th Grounds of Appeal, inclusive, fall within this Point (R., Vol. 1, p. 44, ll. 35, 45, 46; R., Vol. 1, p. 64, l. 22; p. 68, l. 22; p. 78, l. 18).

As illustrative of these Grounds of Appeal, the 21st Ground of Appeal reads:

"21. The Court erroneously when the witness, Benjamin F. Taylor, was on the stand permitted an answer to the following question: 'Q. Mr. Taylor, I show you a

document signed by J. H. Brown and ask you to tell me what that is, please?' and permitted, over objection, a line of testimony upon the same subject then under discussion relating to the assets transferred to the Maxim Munitions Corporation in consideration of the issue of its stock and the value of these assets from this witness" (R., Vol. 1, p. 44, l. 35).

POINT XII.

The Court erroneously (when the witness, Benjamin F. Taylor, was on the stand) permitted an answer to the following question: "Q. Now, Mr. Taylor, I note in Exhibit P. 3, which is the minutes of the directors' meeting authorizing the acceptance of Mr. Sweeney's offer, there is this recital: 'After full and lengthy consideration and discussion among the members of the board of directors as to the value of and advisability of accepting Mr. Sweeney's offer, the following resolution was adopted.' Was there any full and lengthy consideration and discussion among the members?" and permitted, over objection, a line of testimony upon the same subject then under discussion. (38th Ground of Appeal, R. Vol. 1, p. 47, l. 35; R. Vol. 1, pp. 76, 77.)

POINT XIII.

The Court erroneously admitted in evidence letters patent, assignments and other documents relating to the property conveyed to the corporation by the promoters and the question of fraud and overvaluation. (30th and 39th Grounds of Appeal, R. Vol. 1, p. 46, l. 35; p. 48, l. 13; R. Vol. 1, pp. 61, 62, 64, 65, 66, 68, 69, 70, 75, 76, 102, 104, 166, 208, 214, 215.)

These grounds of appeal are as follows:

"30. The Court erroneously admitted in evidence pages 6, 8 and 12 of the cash book, marked Exhibit P. 31."

"39. The Court erroneously admitted in evidence the following exhibits relating to the issue of its capital stock and to the consideration received by the company therefor: Assignment from Sweeney to company in Brown Machine rifle, Exhibit P. 6; Further Assignment Sweeney to company, Exhibit P. 7; Agreement between Fuller Mfg. Co. and Maxim Munition Co., Exhibit P. 8; Agreement between Maxim Munitions Co. and Hudson Maxim, Exhibit P. 10; pages 52 and 53 of Minute Book, Exhibit P. 11; pages 60 and 61 of Minute Book, Exhibit P. 12; page 78 of Minute Book, Exhibit P. 13; Letters Patent No. 1,228,827, Exhibit P. 14; Model of Rifle, Exhibit P. 15; Letter from J. H. Brown, Exhibit P. 16; Copy of Letter from Maxim Munitions Corp. to J. H. Brown, Exhibit P. 17; Letter from Maxim Munitions Corp. to U. S. Mortgage and Trust Company, Exhibit P. 18, page 66 of Minute Book, Exhibit P. 19; Deed Fuller Mfg. Co. to Maxim Munitions Co., Exhibit P. 20; Map of Fuller Plant, Exhibit P. 21; Letter from Sweeney to Taylor, Exhibit P. 22; page 55 of Minute Book, Exhibit P. 23; Document signed by Scully, Exhibit P. 24; Balance Sheet of December 31, 1915, Exhibit P. 25; Trial Sheet of December 31, 1915, Exhibit P. 26; Trial Balance, Exhibit P. 27; page 31

of Maxim Munitions Co. Ledger, Exhibit P. 28; File, etc., of Patent Application of Hudson Maxim, Exhibit P. 33; File, etc., of Patent Application of Hudson Maxim, Exhibit P. 34; Letter from Hudson Maxim Exhibit P. 48; U. S. Letters Patent, No. 1,031,279, Exhibit P. 60; U. S. Letters Patent, No. 1,310,200, Exhibit P. 61; U. S. Letters Patent, No. 1,310,201, Exhibit P. 62."

POINT XIV.

The Court erroneously admitted in evidence certified copies of the adjudication in bankruptcy, of the order of reference, of the petition for assessment, of the order to show cause, of answer of some respondents to the petition for assessment and of the order levying the assessment. (32nd, 33rd, 34th, 35th, 36th and 37th Grounds of Appeal, R. Vol. 1, p. 47; R. Vol. 1, pp. 193, 194, 195, 197, 200.)

These Grounds of Appeal are as follows:

"32. The Court erroneously admitted in evidence a certified copy of the adjudication in bankruptcy in the United States District Court for the Southern District of New York, marked Exhibit P. 51."

"33. The Court erroneously admitted in evidence copy of the order of reference of the bankruptcy proceedings against Maxim Corporation in the United States District Court for the Southern District of New York, marked, Exhibit P. 52."

"34. The Court erroneously admitted in evidence a copy of the petition for assessment of stock in the Maxim Corporation bankruptcy proceedings, marked Exhibit P. 53."

"35. The Court erroneously admitted in evidence a copy of the order to show cause in the bankruptcy proceedings against Maxim Corporation, marked Exhibit P. 54."

"36. The Court erroneously admitted in evidence copies of answers filed by several respondents to petition for assessment in bankruptcy proceedings, marked, Exhibit P. 55."

"37. The Court erroneously admitted in evidence a copy of the order levying the assessment in the bankruptcy proceedings against Maxim Corporation, marked Exhibit P. 56."

Grounds of Appeal Nos. 6, 11, 13, 14, 17, 18, 22, 29, 31, 40 and 42, are not presented by appellants.

ARGUMENT.

POINT I.

The Court erroneously denied defendants' motion to strike out the complaint under the provisions of the statute of the State of New Jersey entitled "A supplement to an act entitled 'An Act Concerning Corporations' (Revision of 1896) approved April 21, 1896", approved March 30, 1897, Chapter 50, P. L. 1897, p. 124. (First Ground of Appeal, R. Vol. 1, p. 39, l. 31; Motion, R., Vol. 1, pp. 51-53.)

The statute provides as follows:

1. No action or proceeding shall be maintained in any court of this state against any stockholder, officer or director of any domestic corporation for the purpose of enforcing any statutory person liability of such stockholder, officer or director for or upon any debt, default or obligation of such corporation, whether such statutory personal liability be deemed penal or contractual, if such statutory personal liability be created by or arise from the statutes or laws of any other state or foreign country.

2. No action or proceeding shall be maintained in any court of law of this state

> against any stockholder, officer or director of any domestic or foreign corporation by or on behalf of any creditor of such corporation to enforce any statutory personal liability of such stockholder, officer or director for or upon any debt, default or obligation of such corporation, whether such statutory personal liability be deemed penal or contractual, if such statutory personal liability be created by or arise from the statutes or laws of any other state or foreign country, and no pending or future action or proceeding to enforce any such statutory personal liability shall be maintained in any court of this state other than in a nature of an equitable accounting for the proportionate benefit of all parties interested, to which such corporation and its legal representatives, if any, and all of its creditors and all of its stockholders shall be necessary parties."

Fleissner pleaded the provisions of this statute in his answer under the Seventh Separate Defense (R., Vol. 1, p. 22). It was also raised as an objection in point of law in the answer (R., Vol. 1, p. 24). Appellee moved before trial to strike out the Seventh Separate Defense and it was ordered that the motion stand over until the trial. (R., Vol. 1, p. 30, l. 25).

The trial court struck out this defense of the answer and overruled the objection in point of law reserved in the answer, holding that the statute does not apply where an assessment has been made by a bankruptcy court, or, if it does apply, it contravenes the full faith and credit provision of the federal constitution. (R., Vol. 1, pp. 51 to 57).

The statute clearly applies to the instant case. The language of the statute is clear and unambiguous. It prohibits such an action in any court of law of this State against any stock-

holder of a domestic or foreign corporation by or on behalf of any creditor of any such corporation to enforce the statutory liability of such stockholder under a foreign statute and requires that the obligation be *enforced* by a suit in equity. In the instant case we have an action at law by a trustee to enforce for the benefit of creditors an obligation imposed by the statutes of the laws of Delaware against a New Jersey stockholder of a Delaware corporation. The complaint is based upon the statutory liability created by the statutes of Delaware, the place of incorporation. See Paragraph 2 of the Complaint, R., Vol. 1, p. 2, l. 28.

The obligation created by the statutes of Delaware is for the benefit of creditors and the action is brought by the trustee for them.

Fell v. *Securities Co.*, 100 Atl. 788 (Del. Ch. Ct.);

John W. Cooney v. *Arlington Hotel Co.*, 101 Atl. 879 (Del.);

McDermott v. *Woodhouse*, 87 N. J. E. 615.

The statute is merely declaratory of the rule existing before its adoption and the policy declared by our courts and the courts of other states that stockholders cannot be singled out and sued in this state for a liability created by a foreign statute except in equity on an accounting.

In re *Hutchinson and Wilmoth*, 158 Fed. 74;

McDermott v. *Woodhouse*, 87 N. J. E. 615 (Ct. of Errors);

Johnson v. *Tennessee Oil Co.*, 74 N. J. E. 32.

In *Johnson* v. *Tennessee Oil Co.*, the Court held that the statute applied. At p. 35:

"The liability of the defendants as stockholders, to creditors of the company upon

> their stock, depends on the laws of Arizona, subject as to parties and procedure to our own act of 1897 (P. L., p. 124, Sec. 2), requiring in such cases the suit for enforcing a statutory personal liability to be not an action at law, but a suit in equity for an accounting, to which the corporation and all of the stockholders are parties."

We find only two cases in this state where this statute is cited besides the case of *Johnson* v. *Tennessee Oil Co., supra.*

In *Western Bank* v. *Reckless*, 96 Fed. 70 (U. S. Cir. Ct. N. J.) (1899), suit was brought by a judgment creditor of a Kansas corporation against a New Jersey stockholder to enforce a stockholder's personal liability under the constitution and statutes of Kansas. The New Jersey statute was raised on demurrer. The court held that the liability of the defendant to the plaintiff had arisen *prior to the adoption of the New Jersey statute* and that the contract upon which defendant's liability rested was a subsisting contract for breach of which an action at law in the common law courts could be maintained and that therefore the statute of 1897 impaired the obligations of the contract and deprived plaintiff of his remedy which existed when the contract was made; that therefore the statute was unconstitutional. This does not apply to the instant case, where the liability arose after the adoption of the statute.

In *Chicago Title & Trust Co.* v. *Young*, 90 N. J. E. 27, the statute was raised but its effect was not passed upon, the court holding that it had no jurisdiction in that the proceedings for the assessment should be brought in the courts of the domicile of the corporation.

The fact that there has been an assessment made in the bankruptcy proceedings does not change the action in this case from an action to enforce the liability and the statute by its express language applies irrespective of whether the assessment is made by the corporation or in bankruptcy proceedings, or whether it is brought by a creditor or by a trustee in bankruptcy.

An order of assessment and levy made in the bankruptcy proceeding is purely an administrative proceeding preliminary to the institution of a plenary suit and there is no jurisdiction in the bankruptcy court to fix the personal liability of a stockholder.

Harrigan v. *Bergdoll*, 270 U. S. 560, 70 L. Ed. 733;

In re *New Foundland Syndicate*, 196 Fed. 443 (N. J.) Aff'd 201 Fed. 917;

Great Western Telegraph Co. v. *Purdy*, 162 U. S. 329, 40 L. Ed. 986.

In the case last cited the court held that the assessment made in a foreign jurisdiction was not a judgment against anyone, so that the statute of limitations of another state in which an action was brought to enforce the assessment and which barred that action was not unconstitutional as denying full faith and credit to the assessment made in the foreign state.

Remington on Bankruptcy, Sec. 2189:

"Plenary suits are not 'proceedings in bankruptcy' but are controversies arising out of bankruptcy proceedings."

Sec. 1208:

"No personal judgment, however, can be entered against the stockholders in the proceedings on the assessment in the bankruptcy court, much less any order upon him to pay. The stockholder is entitled to a plenary

> action and personal judgment against a stockholder is only to be had in such later plenary action."

The trustee in respect of such a suit stands in the same position as the bankrupt or a creditor, and the statute being applicable to the bankrupt and the creditor, is applicable to the trustee.

The object of the statute is apparent. It is to prevent a resident of this state from being sued in the courts of this state for an assessment except in a case where all of the facts relating to the assessment can be determined and in a court which has the jurisdiction to determine these facts.

There is nothing which would have prevented the trustee in the instant case from filing a bill in equity as required by the statute. We have here a suit by a trustee who is all that is left of the corporation. It is settled that in such a suit he represents the corporation and the stockholders.

In *Bernheimer* v. *Converse*, 206 U. S. 516, 51 L. Ed. 1163; *Hawkins* v. *Glenn*, 131 U. S. 319, 33 L. Ed. 184 and *Great Western Telegraph Co.* v. *Purdy*, 162 U. S. 329, 40 L. Ed. 986, the stockholders were held so integral a part of the corporation that they are present without personal service. No relief or binding judgment or decree is sought against the stockholders. They can come in if they like.

The court below, in the instant case, in holding that the statute did not apply, rested upon the decision of this court in the case of *McDermott* v. *Woodhouse, supra,* (opinion by Justice Swayze) and the case of *Chicago Title & Trust Co.* v. *Young's Executors, supra* (Vice-Chancellor Stevenson). In the *McDermott* case the statute is not cited and apparently was not

brought to the attention of the court. That case does not hold that the statute does not apply. It dealt with a bill to establish a stockholder's liability on stock issued for property at a gross over-valuation and dismissed the bill on the ground that this liability must be ascertained in the forum of the corporation's domicile. The court did not hold that this liability having been so established, an action at law should be maintained in the courts of this state to enforce it. In the instant case the court below referred to the language of Jusice Swayze where he says at p. 620:

> "When that liability has been ascertained, it must be enforced in a court of law * * * unless some element of equity jurisdiction appears, not present in this case as far as the bill shows."

This was mere dicta and the case is no authority that the statute in question would not apply where the liability has been established. The applicability of the statute in question was not in any way involved.

In *Chicago Title & Trust Co.* v. *Young*, the bill was filed to levy an assessment on stock of a foreign corporation and to enforce this assessment. Vice-Chancellor Stevenson, following the decision in *McDermott* v. *Woodhouse*, held that the court had no jurisdiction to levy the assessment, but that this must first be done in the forum of the domicile of the foreign corporation, and dismissed the bill. The statute was cited, but the court did not pass upon its applicability. The court was not called on to decide whether, after the assessment was made in the forum of the domicile, an action at law could be maintained in the courts of this state against a resident

stockholder to enforce the assessment. In this connection the court said at p. 35:

> "After the suit for an accounting of the assets and liabilities has been conducted to a finish in the State of Illinois, and the assessment of the stockholders has been therein ordered, to which proceedings all the stockholders wherever resident are privy, and by which they are bound, then for the first time an action can be maintained in a court of competent jurisdiction in New Jersey to enforce the assessment against the executors of the former stockholder, Mr. Young."
>
> "It would seem from the opinion of the court of errors and appeals in *McDermott* v. *Woodhouse, supra* (at p. 620), that such action would be a strictly legal action of which the court of chancery would have no jurisdiction. *Barkalow* v. *Totten,* 53 N. J. Eq., 573."
>
> (*Barkalow* v. *Totten* was decided two years before the statute was adopted.)

In the first part of the comments of the court he refrains from saying whether this action to enforce the assessment must be at law or in equity, but merely "in a court of competent jurisdiction", and in the concluding paragraph, in commenting on the *McDermott* case, that it would seem from that case that the court of chancery would have no jurisdiction.

Therefore neither of these cases hold that this statute has no application and the only decision is the one in *Johnson* v. *Tennessee Oil Co.,* where the court held that the statute does apply.

We are not concerned with the wisdom of this legislation and it is submitted that the remedy and procedure is goverend by this statute, unless it be that the statute is unconstitutional.

The constitutionality of this statute, we submit, admits of no doubt.

The statute applies equally to all creditors and corporations whether resident or non-resident. There is no discrimination. It does not impair the obligations of any contract. It merely declares in what court in this State a suit to enforce such liability shall be brought and it merely prescribes the remedy.

The right to a particular remedy is not a vested right.

Cooley Constitutional Limitations, 7th Ed., p. 515.

Oshkosh Water Works Co. v. *Oshkosh,* 47 L. Ed. 249, where Justice Harlan says at p. 250:

> "It is well settled that while in a general sense the laws in force at the time a contract is made enter into its obligations, parties have no vested right in the particular remedies or modes of procedure then existing."

Cooley above:

> "As general rule every state has complete control over the remedies which it offers to suitors in its courts. It may give new and additional remedy for a right or equity already in existence. And it may abolish other remedies and substitute new; or even without substituting any, if any reasonable remedy still remains."

There is no impairment of the obligation of any contract because the statute merely provides a particular remedy.

The remedy given for the enforcement of a contract constitutes no part of the contract and it may be changed or modified at the will of the legislature.

See *Rose's Notes* on U. S. Rep. Vol. 2, pp. 415-417.

Tennessee v. *Sneed,* 96 U. S. 69, 24 L. Ed. 610, where the court said (at p. 612):

> "Our own reports and those of the states are full of cases holding that the legislature may alter and modify the remedy to enforce a contract without impairing its obligation—if a particular form of proceeding is prohibited and another is left or is provided which affords an effective and reasonble mode of enforcing the right, the obligation of the contract is not impaired. The rule seems to be that in modes of proceeding and in forms of enforcing the contract, the legislature has the control and may enlarge, limit or alter them provided that it does not deny a remedy or so embarrass it with conditions and restrictions as seriously to impair the value of the right."

Fourth National Bank v. *Francklyn,* 120 U. S. 747, 30 L. Ed. 825. This case deals with the liability of stockholders. A statute was passed changing the remedy. The court said:

> "As it does not undertake to annul the liability of the stockholders for the debts of the corporation but only modifies the form of remedy and the rules of evidence, it is not doubted that it is a constitutional exercise of the power of the legislature even as applied to debts contracted by the corporation before its enactment." (at p. 828).

Hill v. *Merchants Mutual Insurance Co.,* 134 U. S. 515, 33 L. Ed. 994, and *Bernheimer* v. *Converse,* 206 U. S. 516, 51 L. Ed. 1163, holding that states have a perfect right to change by legislation the remedy and the procedure with reference to enforcing stockholders' liabilities, and that such legislation does not impair the obligations of a contract.

Bronson v. *Kinzie,* 1 How. 311, 11 L. Ed. 143, at 145:

> "Undoubtedly a state may regulate at pleasure the modes of proceeding in its

courts in relation to past contracts as well as future * * *. Regulations of this description have always been considered in every civil community as properly belonging to the remedy, to be exercised or not by every sovereignty according to its views of policy and humanity. It must reside in every state to enable it to secure its citizens from unjust and harassing litigation and to protect them in those pursuits which are necessary to the existence and well-being of every community. And although a new remedy may be deemed less convenient than the old one, and may in some degree render the recovery of debts more tardy and difficult, yet it will not follow that the law is unconstitutional. Whatever belongs merely to the remedy may be altered according to the will of the state, provided the alteration does not impair the obligation of the contract."

If it is argued that that part of the statute which requires the corporation and its legal representatives and all of its creditors and stockholders to be made parties so restricts the action as to prevent a creditor from bringing suit, the answer is that this is not the case. As said above we have here a suit by a trustee who is all that is left of the corporation. It is settled that in such a suit he represents the corporation, the stockholders and the creditors.

No relief or binding judgment or decree is sought against these stockholders. They can come in if they like. The same is true of the other creditors.

7 *Fletch. Cyc. Corporation,* Sec. 424, in referring to the rules in the different states relative to enforcing stockholders' liability:

"In New Jersey the matter is regulated by statute." Referring to the Act of March 30, 1897.

Sec. 4250:

> "As a general rule the form of the remedy and the mode of procedure and practice to be adopted in enforcing the individual liability of stockholders are goverened by the law of the forum."

Therefore, it is submitted that the statute deals merely with the remedy for enforcing a liability arising under the Delaware law. It does not impair the obligations of the contract. It makes no unfair or unreasonable discrimination and does not deny to the citizens of another state the privileges and immunities of the citizens of this state. The trustee is not denied the right to sue, but the statute prescribes the court where such suit shall be brought and the procedure to be followed.

Nor is it unconstitutional as in violation of the full faith and credit clause of the United States Constitution.

The suit to enforce the assessment against the stockholder is not a proceeding in bankruptcy, but is a plenary suit and the bankruptcy court has no jurisdiction to entertain it.

In re *Newfoundland Syndicate,* 196 Fed. 443 (N. J.).

In re *Hutchinson and Wilmoth,* 158 Fed. 74 (Cir. Ct. of App. 6th Cir.).

Toland v. *Sprague* 12 Peters 300, 9 L. Ed. 1093.

Great Western Telegraph Co. v. *Purdy,* 162 U. S. 329, 40 L. Ed. 986.

Converse v. *Hamilton,* 224 U. S. 243, 56 L. Ed. 749.

In re *Remington Auto & Motor Co.,* 153 Fed. 345 (N. J.).

Harrigan v. *Bergdoll,* 270 U. S. 560, 70 L. Ed. 733.

Remington on Bankruptcy, 3rd Ed., Secs. 1208, 1289.

The New Jersey statute relates merely to the form of this plenary suit and not to the assessment or the proceedings leading up to the assessment in the bankruptcy court. An act which prescribes the court in which the action to enforce the assessment must be brought and the procedure relating thereto, does not deny full faith and credit to the assessment which is sought to be enforced. So far as the proceedings in the bankruptcy court are concerned, they are unaffected by the New Jersey statute.

The Bankruptcy Act, Sec. 23 b, expressly provides that suits by trustees shall only be brought or prosecuted in the courts where the bankrupt whose estate is being administered might have brought or prosecuted them if the bankruptcy proceedings had not been instituted.

Section 23b of the Bankruptcy Act of 1898, U. S. Comp. Stat., Vol. 9, Sec. 960, 36 Stat. 840, defining the jurisdiction of the United States Courts, provides:

> "Jurisdiction of United States and State Courts—(a) The United States Circuit Courts shall have jurisdiction of all controversies at law and in equity as distinguished from proceedings in bankruptcy between trustees as such and adverse claimants concerning the property acquired or claimed by the trustees in the same manner and to the same extent only as though bankruptcy proceedings had not been instituted and such controversies had been between the bankrupt and such adverse claimants.

"(b) *Suits by a trustee shall only be brought or prosecuted in the courts where the bankrupt whose estate is being administered by such trustee might have brought or prosecuted them if proceedings in bankruptcy had not been instituted* unless by consent of the proposed defendant except suits for the recovery of property under Section 60, Subdivision b, Section 67, Subdivision e, and Section 70, Subdivision e."

Section 60, Subdivision b; Section 67, Subdivision e, and Section 70, Subdivision e, U. S. Comp. Stat., Vol. 9, Secs. 9644, 9651 and 9654, excepted from the operation of Section 23, Subdivision b above, relate only to preferential transfers and do not bring an action to enforce an assessment within the jurisdiction of the Bankruptcy Court. They provide as follows:

Sec. 60, Subdiv. b, U. S. Comp Stat. Vol. 9, Sec. 9644, gives the court of bankruptcy and any state court which would have had jurisdiction if bankruptcy had not intervened, concurrent jurisdiction to avoid preferences by transfer, etc., within four months from the filing of the petition.

Sec. 67, Subdiv. e, U. S. Comp. Stat. Vol. 9, Sec. 9651, declares conveyances, etc., made within four months prior to the filing of the petition in bankruptcy void as against creditors and gives the bankruptcy court and any state court which would have had jurisdiction if bankruptcy had not intervened, concurrent jurisdiction in suits for recovery.

Sec. 70, Subdiv. e, U. S. Comp. Stat. Vol. 9, Sec. 9654, gives the trustee the right to avoid any transfer of property which any creditor of such bankrupt might have avoided and the right to recover such property and gives the court of bankruptcy and any state court which would have had jurisdiction if bankruptcy had not intervened, concurrent jurisdiction.

The only respect in which the full faith and credit clause of the United States Constitution is involved is with reference to the effect to be given to the assessment made in the bankruptcy proceedings in the plenary suit to enforce this assessment.

The same is true as to the contention that the statute is unconstitutional because repugnant to the federal bankruptcy act or in violation of Article 1, Section 8, of the United States Constitution empowering Congress to establish uniform laws on the subject of bankruptcy throughout the United States.

The plenary action to enforce the assessment not being a bankruptcy proceeding and over which the bankruptcy court has no jurisdiction, the statute of New Jersey, relating only to this plenary suit and not to the bankruptcy proceedings leading up to the assessment, does not conflict with the Bankruptcy Act or with the constitutional provision empowering Congress to establish uniform laws on that subject.

Such a plenary action brought by the trustee is therefore subject to the provisions as to the remedy and the forum provided by the New Jersey statute to the same extent as though it had been brought by a creditor individually or by the company.

Furthermore, the bankruptcy court had no jurisdiction and there was no valid assessment against Fleissner, because he was not a party to the proceeding or served with process. We refer to the argument under Point IV (C).

POINT II.

The Court erroneously struck out the seventh separate defense in the answer. (Second Ground of Appeal, R. Vol. 1, p. 40, l. 1; R. Vol. 1, p. 57; Answer, R. Vol. 1, p. 22, l. 13.)

The argument in connection with Point I applies to this point.

POINT III.

The Court erred in overruling defendants' objection in point of law to the complaint reserved in defendants' answer. (Third Ground of Appeal, R. Vol. 1, p. 40, l. 4; Motion, R. Vol. 1, pp. 52, 57.)

This objection in point of law raised the bar of the statute of 1897, p. 124, (Answer, R., Vol. 1, p. 24, l. 10), set forth under Point I, and the argument in connection with that point applies here.

POINT IV.

The Court erred in denying defendants' motion for a non-suit. (Fourth Ground of Appeal, R. Vol. 1, p. 40, l. 11; Motion for non-suit, R. Vol. 1, pp. 241-247.)

It is submitted that the motion for a non-suit should have been granted for the following reasons:

(A) *That there was no proof Fleissner had notice, either actual or constructive, that the stock was issued to the promoters at a gross overvaluation and that it was not fully paid and non-assessable.* (Motion for non-suit, R., Vol. 1, p. 246, l. 28).

Fleissner was not a subscriber to the company for its stock, but a purchaser of the stock from another, who himself was a purchaser and not a subscriber. (R., Vol. 1, p. 128, ll. 30 to 40; p. 129, p. 148, l. 33, to p. 149, l. 15). In order to render him liable for further assessment, it must be shown that he had actual notice of the facts rendering his stock subject to further assessment, or of facts requiring him to make inquiry and that this inquiry would have resulted in this knowledge.

Thompson on Corporations, 2nd Ed., Vol. 4, Secs. 4825, 4827;

Enright v. *Heckscher,* 240 Fed. 863 (Cir. Ct. of App., 2nd Cir.);

Harrigan v. *Bergdoll,* 270 U. S. 560, 70 L. Ed. 733.

Even assuming that the order levying the assessment was properly made by the referee in bankruptcy, it does not preclude Fleissner from setting up that he was a holder without notice.

Stockley v. *Perry,* 26 N. J. L. J. 4;

Harrigan v. *Bergdoll,* 270 U. S. 560, 70 L. Ed. 733;

Enright v. *Heckscher,* 240 Fed. 863 (Cir. Ct. of App., 2nd Cir.);

In re *Hutchinson* and *Wilmoth,* 158 Fed. 74 (Cert. denied, 209 U. S. 546, 52 L. Ed. 920);

In re *Newfoundland Syndicate,* 196 Fed. 443 (N. J.).

The facts relied upon by appellee as supporting his contention that Fleissner had constructive notice of the original overvaluation of the assets purchased from the promoters are:

1. The purchase by Fleissner from Palmer in December, 1916 of part of Palmer's shares

purchased by Palmer under the syndicate agreement of February 10, 1916.

2. The purchase by Fleissner of treasury stock under the two syndicate agreements of June and November, 1916.

3. The donation of some of Fleissner's stock and the loan of the proceeds of sale from other shares of this stock to the company after the purchase from Palmer.

4. The fact that stock was selling on the market for more than the price called for by the syndicate agreement of February 10, 1916.

5. The fact that the property purchased was not worth the value fixed by the directors.

It is submitted that there is nothing in these facts charging Fleissner with notice of any overvaluation and of any liability for further assessment.

As appears the stock was issued as full paid and non-assessable and the stock certificates so recited on their face. (Ex. P. 36, R., Vol. 2, p. 398).

Fleissner had nothing to do with the organization of the company or with the sale of the assets of the company. He was at no time a director and his only connection with the company was as a stockholder by purchase. No claim is made that he had actual notice of the facts relating to the purchase of the assets in question.

The syndicate agreement of February, 1916, was not made with the company but related to stock which admittedly was owned by the promoters (R., Vol. 1, p. 128, ll. 30 to 40; p. 129).

If it be argued that the 510,000 shares covered by this agreement were in effect sold by the company under the syndicate agreement of February 10, 1916 and that the promoters in effect turned the stock back into the company's treasury, as they did with the 300,000 shares, even so, this does not amount to notice to Fleissner of any overvaluation in connection with the original issue.

Fleissner was not a party to the syndicate agreement of February, 1916, but in December, ten months later, purchased Palmer's shares under this agreement. It is admitted that he is not assessable for the 2,000 shares which he purchased under the syndicate agreements of June and November, 1916, and to which he was a party. Under these he purchased treasury stock (Ex. P. 38, R., Vol. 2, p. 403; Ex. P. 49, R., Vol. 2, p. 424; R., Vol. 1, p. 138, l. 3, p. 139, l. 10).

There is nothing on the face of either of these three syndicate agreements which relates in any way to the original issue of stock or the valuation placed upon the assets purchased. They show only that the company was in need of funds to meet the operating expenses in connection with filling large munitions contracts with the Danish, Greek, Italian and Russian Governments, the New England Westinghouse Company and other contracts (Ex. P. 29, R., Vol. 2, p. 339; Ex. P. 38, R., Vol. 2, p. 403; Ex. P. 49, R., Vol. 2, p. 424).

As to Fleissner's donation to the company and loan of the proceeds of sale of some of the stock purchased from Palmer subsequent to his purchase, there is nothing in this to show knowledge of such facts as amounts to constructive notice of alleged overvaluation of assets more than a year previous. The most that it showed was that at

that time the company was badly in need of working capital. Furthermore, this was in May, July and August, 1917, several months after the purchase of the stock from Palmer (Exs. P. 42, P. 43, P. 44; R., Vol. 2, pp. 413 to 419).

We are concerned only with Fleissner's knowledge at the time he purchased the stock in December, 1916, and not with what he learned at a later date.

Nor does the fact that he may have purchased this stock from Palmer at a price less than it was selling for on the market amount to actual or constructive notice of the over-valuation of property for which the stock had been originally issued to the promoters, more than a year previous, and it does not appear what Fleissner paid Palmer.

The vicissitudes of the stock market, particularly in "war babies" during the World War, is a matter of common knowledge. The fact that Fleissner knew he was purchasing the stock at considerably less than it was then selling for on the market was entirely insufficient to give him constructive notice that the stock had originally been issued, more than a year previously, for property which was not worth the price fixed and cast upon him no duty to investigate what consideration was paid to the company for the stock when it was originally issued. The most that can be said is that he knew that the company's affairs were at a low ebb at the time of his purchase, which might have been due to one of a hundred different reasons having nothing to do with the original issue of stock. *Is a purchaser of stock who purchases below the price at which it is selling on the market charged with notice of and a duty to inquire as to the circumstances surrounding the original issue of this*

stock by the company long before his purchase, and as to the consideration which the company received therefor?

Appellee does not claim, we understand, that Fleissner had actual notice of the circumstances surrounding the original issue of this stock. He was not a party to it and reaped no benefit from that transaction and was not connected with the compay until many months later and then only as a stockholder.

It is the policy of the law not to encumber the transfers of stock and to protect the purchasers of stock certificates.

Thompson on Corporations, 2nd Ed. Vol. 4, Sec. 4825;

Thompson on Corporations, Sec. 4827:

> "The rule is now firmly established that one who purchases in good faith, in the open market, stock of a corporation which is shown on the face of the certificate to be full paid and non assessable, cannot be subject to assessment on such stock though in fact it had not been fully paid. The courts recognize the fact that the certificates possess so much of the attributes of negotiability, that a purchaser in the open market may accept as true the recitals on the face that they are in fact full paid."

Cook on Corporations, 8th Ed. Vol. 1, Chap. 3, p. 317, in speaking of this rule, says:

> "It is based on sound public policy, favoring, as it does, the transfer of personal property, and the quasi-negotiability of stock, and discountenancing secret liens and constructive notice."

Fleissner was entitled to rely on the statement contained in the stock certificate in the absence of notice of such facts as would have lead him to inquire whether the stock was full paid and

non-assessable and it is something more than the facts relied upon by the appellee to charge Fleissner in law with the duty to inquire as to what the consideration was which was received by the company.

At the time he purchased the stock it *was* full paid and non-assessable under the Delaware law, and until proceedings were brought to set aside the contract of subscription made by the original promoters, he was entitled to accept the situation at its face value. It is submitted that nothing short of notice that the property transferred to the company by the promoters was grossly over-valued, or of facts which would have led a reasonable man to make inquiry on that point, is sufficient. It would lead to the gravest consequences if the courts should hold that the purchaser of a stock certificate which recites that the stock is full paid and non-assessable, and which under the laws of the state where the corporation is incorporated is full paid and non-assessable until attacked by proper proceedings and the action of the directors set aside, was liable to assessment merely because he had notice of facts which showed that the company was in financial difficulities or badly in need of funds, or because he purchased the stock at less than it was then selling for on the market from a member of a syndicate who himself was a purchaser or transferee and not a subscriber, nor in any way connected with the original issue, and to hold such purchaser liable many years after the transaction complained of and many years after he had disposed of his stock, and where the question of overvaluation relates to the value of technical inventions and patents relating to explosives and arms and as to which only experts would be qualified to pass judgment.

There would, if that be the law, be no protection to one purchasing stock, no matter how innocently, with knowledge that the company was at that time in need of capital.

An investigation by Fleissner, made at the time that he purchased the stock, would not have revealed to him the fact that the property conveyed to the corporation by the promoters was grossly overvalued. All he would have learned was that Hudson Maxim, a well known figure and inventor in the field of explosives and arms, of high reputation, was connected with the company; that a number of inventions and patents relating to explosives and firearms, with imposing names and appealing to the public mind because of the European struggle, had been acquired by the company, together with Maxim's services; that the Board of Directors, after full consideration, had fixed the value of the property so purchased. He had no reason to doubt or question their judgment. What ordinary individual would have known that these patents and inventions were not worth the valuation fixed by the Directors, and therefore, if he bought any of the stock, he would be liable for an assesment if the assets were insufficient to pay the creditors of the company. Fleissner was not an expert in munitions or ordnance and only an expert would have been in a position to have come to any reasonable conclusion as to the value of these inventions, and we venture to say that even among experts there would have been a wide variety of opinion. Certainly Fleissner was under no duty to engage experts to advise him as to whether or not the property for which the stock was originally issued was worth what the Directors declared it to be worth. In every case where a stockholder has been held liable to an assessment because the

stock was originally issued for property grossly overvalued on the ground that he had actual knowledge of the overvaluation or notice of such facts that the law imputed this knowledge to him, the stockholder was either directly connected with the original issue and the overvaluation or was more closely related to it and had a greater degree of actual knowledge than the facts here proven as to Fleissner.

The fact that experts, fourteen years after the valuation was fixed on the property, testify that in their opinion the property was worthless, in the light of the facts developed since that time and the progress made in that field of endeavor, does not in any way show that Fleissner would have discovered that the property was grossly overvalued at the time he made his purchase if he had made an investigation. To charge him with notice, it must appear that he would have learned of the overvaluation had he looked into the matter.

It is submitted that there is no proof that Fleissner knew, or should have known, that the stock was not full paid and non-assessable.

(B) *Plaintiff's proofs show that Fleissner had disposed of all of the stock purchased by him from Palmer and he was not a stockholder at the time of the institution of the bankruptcy proceedings, the decree of insolvency or the levying of the assessment, and is, therefore, not liable for the assessment against this stock* (Motion for non-suit, R., Vol. 1, p. 244, l. 10).

It is not disputed that all of the shares purchased by Fleissner from Palmer had been transferred out of his name by October 30, 1917, about a year and a half prior to the filing of the petition in bankruptcy and at which time no proceed-

ings had been taken to attack the original issue of the stock. Nine hundred and fifty-seven shares, which were the balance of the shares purchased by Fleissner from Palmer, were sold by Fleissner on the market and transferred out of his name by October 30, 1917 (Ex. D. 1, R., Vol. 2, p. 475), and the other shares purchased from Palmer had previously to this been donated by him to the company and sold by the company on his authorization (R., Vol. 1. pp. 151, 152, 155 to 158).

There is a vital distinction between an orginal subscriber to stock of the company and one who is a purchaser or transferee of the stock. In the former there is a binding contract to pay the subscription price. While there may be some doubt as to whether a subscriber can relieve himself from the obligation to pay an unpaid assessment on the stock subscribed for by a transfer, it is submitted that in the case of a purchaser or transferee, the transfer by the purchaser or transferee removes any liability for an assessment made after such transfer unless the transfer was made in bad faith for the purpose of escaping the liability. There is no proof of any kind, nor was it contended at the trial by the appellee that the transfer of the stock by Fleissner was made in bad faith for the purpose of escaping liability for further assessment. In the case of a purchaser or transferee of stock, the assessment is upon the stock and he is held liable as a member of the corporation if he had notice, actual or constructive, that the stock was not full paid and non-assessable, but when he ceases to be a member of the corporation by transfer of the shares, there is no personal liability for an assessment later made unless the transfer was made for the purpose of escaping liability.

Thompson on Corporations, 2nd Ed. Vol. 4, Sec. 4826:

"The same rule that relieves a good faith transferrer from liability for unpaid stock or from *the liability imposed by statute*, relieves him from liability for assessments after he has transferred his stock. Thus an owner of shares in a national bank who sold the same in good faith and who did all that was reasonably possible to have the transfer made on the books of the bank, was held not liable to an assessment made upon the subsequent insolvency of the bank although it was in fact insolvent when the sale was made and the purchaser was also insolvent."

Thompson on Corporations, 2nd Ed. Vol. 4, Sec. 4371:

"The general rule is that an absolute transfer by a stockholder duly registered on the books of the corporation relieves the transferrer from all further liability upon the uncalled subscription price of his stock. The rule has been concretely stated thus: 'A transfer of stock made in good faith and at a time when the corporation is a going and solvent concern, and which is entered upon the books, would certainly relieve the transferrer from all the responsibilities which attach to him as a stockholder.' The court further said that 'the owners of corporate stock devest themselves of the liabilities incident to their relation to the corporation when they have actually transferred their stock in the same manner provided by law.' A bona fide transfer to a solvent transferee with the corporation's assent while it is solvent, discharges the transferrer from *all* liability."

Sec. 4373:

"It will be observed from preceding sections that the liability of the transferrer ceases, ordinarily, when the transfer is duly registered on the books of the corporation."

Hood v. *McNaughton*, 54 N. J. L. 425. Action by a receiver to recover the balance of the amount subscribed by the defendant for the stock of the company. The defendant had assigned his shares but the transfer had not been made on the books of the company. The court held that the defendant, being a subscriber, was not relieved from paying the subscription price by transferring his stock, distinguishing between a subscriber and one who holds his stock by transfer, and recognizing that a transferee, not a subscriber, discharges himself by a due transfer of his shares.

At p. 428:

> "A distinction is drawn between one who holds his stock by transfer and an original subscriber. The former may in the absence of any fraudulent purpose, discharge himself from liability for unpaid installments by due transfer of his shares while the latter cannot obtain immunity in that way."

In the case of a stockholder in a national bank, he is relieved from statutory liability to assessment by a transfer of his stock in good faith.

Earl v. *Carson*, 188 U. S. 42, 47 L. Ed. 373.

The same principle applies with equal force to the instant case.

While there may be some authority in other states to the effect that a transferrer of watered stock is not relieved from liability for assessment by the transfer, even though he was not a subscriber to the corporation or a party to the overvaluation, this question has not been decided by either the courts of the State of Delaware or of this State, which is the law controlling the instant case, and it is submitted that the same principles which exempt the transferrer from

further assessment in other cases exempt him from assessment in the case of overvaluation where he was not a party to the original fraud. In all of the decisions, either in this State or in the State of Delaware, dealing with watered stock, *the stockholders against whom the assessments were sought were either parties to the original overvaluation or fraud, or were stockholders at the time when the suits were brought.*

Weatherbee v. *Baker,* 35 N. J. E. 501;
Hood v. *McNaughton,* 54 N. J. L. 425;
See v. *Heppenheimer,* 69 N. J. E. 36;
Easton National Bank v. *American Brick Co.,* 69 N. J. E. 326;
Gilson v. *Appleby,* 79 N. J. E. 590;
Holcombe v. *Trenton White City Co.,* 80 N. J. E. 122;
Wolcott v. *Waldstein,* 86 N. J. E. 63;
Cooney v. *Arlington Hotel Co.,* 101 Atl. 879 (Del.); modified in *DuPont* v. *Ball,* 106 Atl. 39 (Del.).

The only case which we have found in either Delaware or this State, in which there was a transfer of the stock by the person against whom an assessment on watered stock was sought is *Wolcott* v. *Waldstein, supra.* In that case the bill was filed to assess stock on the ground that it was issued for property grossly overvalued. The assessment was sought against the members of the board of directors who determined upon the value and authorized the purchase. There was some dispute as to whether two of the directors against whom the assessment was sought had an interest in the property which was owned by the other director but the Court found that if they had not already acquired an interest, they at that time anticipated sharing in the stock with the other director who did own the property

and as directors they participated in the overvaluation. These two directors had transferred their stock. The Court held that it was unnecessary to consider whether the transfer of this stock was bona fide so as to relieve them from liability.

At page 65:

"I think it immaterial in this case whether at the time the property was purchased defendants, Bomeisler and Cassidy had fully acquired an interest in the property. They at that time anticipated sharing with Waldstein, the vendor, the stock which was to be issued for the property and subsequently did share it. Assuming that their final determination to acquire this stock was reached after the purchase was authorized, they thereby became purchasers from Waldstein of stock issued for property which they had assisted him in overvaluing; in these circumstances it is doubtful whether the equitable rights of creditors against either of the three can be distinguished. But still assuming that Bomeisler and Cassidy purchased their stock from Waldstein after he had acquired it, and recognizing, for present purposes, a distinction between the liability of the person to whom such stock is originally issued and a person to whom it is transferred with notice of the infirmity, the liability of Waldstein to creditors would be for the entire overvaluation notwithstanding the fact that he has since disposed of part or all of his stock, and the liability of Bomeisler and Cassidy to creditors would be for the unpaid part of the stock acquired by them, notwithstanding the fact that they may have since parted with part or all of it. * * *"

"The view taken here touching the liability of defendants Bomeisler and Cassidy renders it unnecessary to determine whether their transfer of stock to Beale was *bona fide.*"

We do not dispute the rule that a transfer by the parties directly connected with the overvaluation and fraud cannot relieve them from liability for assessment. The *Wolcott* case is distinguishable from the instant case in that there the stockholders assessed were parties to the original fraud, shared in the benefits derived therefrom and as directors fixed the overvaluation, and the decision in that case is merely that parties to the original fraud cannot escape liability for assessment by transferring their stock. There is no authority in either this State or Delaware holding that a transferrer of stock who was not a party to the original fraud in overvaluing the property purchased, even though he may have had constructive notice at the time of his purchase of the overvaluation, can be assessed after he has transferred his stock providing the transfer was made in good faith.

It is submitted that the same rule which relieves a transferrer of stock from liability for further assessment where the assessment is for a reason other than that the stock is watered, applies in the case of watered stock providing the transferrer was not a party to the original fraud or overvaluation. Such a transferrer is not a wrong-doer in any sense of the word. Nothing that he has done has prejudiced or injured the rights of the creditors of the corporation and it is only for their benefit that the stock can be assessed. So long as he is a stockholder under the principles established he is liable to assessment as in the other case, but when he ceases to be a stockholder this liability also ceases.

The case is analogous to the case of a purchaser of real estate with knowledge that the real estate is subject to a mortgage where the

purchaser has not expressly assumed the payment of the mortgage. The property in his hands is alone liable for the mortgage debt and where he sells the property he cannot be held for the debt.

A purchaser of stock with notice that it was originally issued for property overvalued does not assume the payment of any assessment that may be later made because of such overvaluation. So long as he remains a member of the corporation he is liable to assessment but after he has ceased to be a member by transferring his stock in good faith, such liability ceases.

There is nothing in either the constitution or the statutes of Delaware which imposes this liability after a transfer of the stock. On the contrary, the statutory liability under the laws of the State of Delaware, upon which this suit is based and the assessment was made (Complaint, R., Vol. 1, p. 2) expressly limits the liability to the holders of stock and on each share *held by them.*

Section 14 of the *General Corporation Law* of the State of Delaware (Ex. P. 2, R., Vol. 2, p. 283), provides:

> "1928. Sec. 14. Issuance of Stock for Labor or Real or Personal Property:—Subscriptions to, or purchase of the capital stock of any corporation organized or to be organized under any law of this State may be paid for, wholly or partly, by cash, by labor done, by personal property or by real property or leases thereof; and the stock so issued shall be declared and taken to be full paid stock and not liable to any further call, nor shall the holder thereof be liable for any further payments under the provision of this Chapter. And in the absence of actual fraud in the transaction, the judgment

of the Directors, as to the value of such labor, property, real estate or leases, shall be conclusive."

22 Del. Laws, Ch. 166, Sec. 1; 23 Del. Laws, Ch. 155, Sec. 1.

Sec. 20 of this Act (Ex. P. 2, R., Vol. 2, p. 284) which fixes the liabilities of stockholders and which section is the basis of the complaint in this action (Complaint, R., Vol. 1, p. 2), provides:

"1934. Sec. 20. Stockholders Liability for Part Paid for Stock:—When the whole capital stock of a corporation shall not have been paid in, and the assets shall be insufficient to satisfy the claims of its creditors, *each stockholder* shall be bound to pay *on each share held by him* the sum necessary to complete the amount of the par value of such share as fixed by the charter of the company or its certificate of incorporation, or such proportion of that sum as shall be required to satisfy the debts of the company, which said sum or proportion thereof may be recovered as provided for in Section 49 of this Chapter, after a writ of execution against the corporation has been returned unsatisfied, as provided for in Section 51 of this Chapter." (Ital. ours.)

21 Del. Laws, Ch. 273, Sec. 14; 22 Del. Laws, Ch. 166, Sec. 1.

The liability imposed by this section is by its express language limited to a *stockholder on each share held by him.* It imposes no liability upon any one but a stockholder and the liability is limited to the number of shares held. So that under this statute no liability for the assessment attached to Fleissner after he ceased to be a stockholder and ceased to hold any of the shares of stock of the company.

The action is not an action for fraud but to recover the statutory liability imposed by this

section and the assessment based thereon made in the bankruptcy cause.

In *John W. Cooney Co.* v. *Arlington Hotel Co.,* 101 Atl. 879 (Del. Ch.), at page 887, dealing with the liability of subscribers to the corporation for watered stock, the subscribers still being stockholders, the Court said in construing this section of the Act upon which the assessment was based:

> "Corporate stock issued, outstanding and not paid for is a fund for the benefit of creditors and in general all who *hold* stock not paid for are liable to creditors for the amount so unpaid." (Italics ours.)

As is pointed out above, the order levying the assessment is no bar to personal defenses which are available to Fleissner and is merely conclusive upon the necessity for the assessment, the amount of the debt, the amount of the assets and the rate of assessment.

In re *Newfoundland Syndicate,* 196 Fed. 443 (N. J. Dist. Ct.) at page 447:

> "The enforcement of said assessment against the stockholders alleged to be liable thereto, however, is plenary in its nature and except with their consent cannot be made in the bankruptcy court. Section 23b, Bankr. Act. In the suit to collect such assessment, the defendant is entitled to make all defenses that relate to him as distinguished from his corporate capacity such as that he is not a stockholder or that he has fully paid for the stock taken."
>
> Citing, *Great Western Tel. Co.* v. *Purdy,* 162 U. S. 329, 40 L. Ed. 986; *Converse* v. *Hamilton,* 224 U. S. 243, 56 L. Ed. 749; *Goss* v. *Carter,* 156 Fed. 752; *Gilson* v. *Appleby,* 80 N. J. L. 542 (Ct. of Errors);
>
> *Hood, Receiver* v. *McNaughton,* 54 N. J. L. 425.

Fleissner's purchase of Palmer's stock did not in any way deplete or dissipate the assets of the corporation nor injure the creditors in any way. The creditors had not changed their position in any respect in reliance upon his purchase or his liability to assessment. There is no principal of law under which creditors of a corporation are entitled to enforce assessments against anyone who at any time had been a stockholder of the company but who had ceased to be such unless such stockholder was a party to the original fraud thereby directly contributing to the loss sustained by the creditors, or was a member of the corporation as a stockholder at the time of the assessment with knowledge of the fraud. The primary obligation rests upon the original promoters and those participating in the fraud, and the secondary obligation upon the holders of stock as members of the corporation at the time that the assessment is made where they had notice of the overvaluation, but no obligation extends to former stockholders who did not in any way participate in the fraud and who in good faith have transferred their stock.

The plaintiff's proofs showed that all of the shares purchased by Fleissner had been transferred by him many months previous to the institution of the bankruptcy proceedings and the proceedings for the assessment (R., Vol. 1, pp. 108, 109, l. 12; p. 152, ll. 30 to 36; pp. 154, 155, 156, 157, 158; pp. 143, 144; Charge, p. 250, l. 10; Ex. P. 36, R., Vol. 2, p. 398; Ex. P. 39, R., Vol. 2, p. 409; Ex. D. 1, R., Vol. 2, p. 475).

The bona fides of the transfers was not questioned in the court below and was not an issue in the case. That the shares were transferred in bad faith cannot be presumed. Under the

plaintiff's theory, defendants were liable if Fleissner had notice of the overvaluation, notwithstanding that he had transferred the shares and had no interest in them at the time of the bankruptcy proceedings or the assessment. This was the theory adopted by the Court who instructed the jury that there was only one question and that was—did Fleissner have notice of the overvaluation at the time he purchased the stock? (Charge, R., Vol. 1, p. 254, l. 18 to p. 256, l. 17; p. 265, l. 13; p. 268, l. 25; Exception to Charge, R., Vol. 1, p. 267, l. 29; 7th, 8th, 10th, 11th, 14th and 19th Requests to Charge, R., Vol. 1, pp. 276-279.) That was the law of the case. It cannot now be argued for the first time that the Courts' denial of the motion for non-suit or for a direction of a verdict was correct because the question of the bona fides of the transfers was a question of fact for the jury.

Flammer v. *Morrelli,* 100 N. J. L. 314 (Ct. of Errors).

Under the principles above stated, appellants were entitled to a non-suit or to a direction of verdict.

(C) *The order levying the assessment made by the United States District Court for the Southern District of New York, was invalid as against Fleissner because he was not a party to those proceedings and was not brought in by due process.* (Motion for non-suit, R., Vol. 1, p. 246, l. 20, p. 242, ll. 30-35.)

Before an action to enforce an assessment can be brought there must be an assessment.

McDermott v. *Woodhouse,* 87 N. J. E. 615;
Barkalow v. *Totten,* 53 N. J. E. 573;
Manufacturers Box & Lumber Co., 251 Fed. 957 (N. J.);

Scovill v. *Thayer*, 105 U. S. 145, 26 L. Ed. 968;

Remington on Bankruptcy, 3rd Ed. Vol. 3, Sec. 1208.

Fleissner was not served with process but it appears that a copy of the order to show cause made by the referee in bankruptcy was mailed to him in this State. Fleissner was a resident of this State and was not subject to the jurisdiction of the District Court in New York. He did not appear in those proceedings.

It is submitted that he cannot in this way be made a party to the proceedings for assessment.

Until the contract under which the stock was issued as full paid and non-assessable is set aside by a court of competent jurisdiction, the stock is full paid and non-assessable and this contract cannot be set aside so as to bind Fleissner except in a court of competent jurisdiction in a suit to which he was a party and duly served with process.

In re *Hutchison and Wilmoth*, 158 Fed. 74 (Cert. denied 209 U. S. 546, 52 L. Ed. 920);

McDermott v. *Woodhouse*, 87 N. J. E. 615 (Ct. of Errors);

Johnson v. *Tennessee Oil Co.*, 74 N. J. E. 32;

Cumberland Lumber Co. v. *Clinton Hill Lumber Co.*, 57 N. J. E. 627;

See v. *Heppenheimer*, 69 N. J. E. 36;

Gilson v. *Appleby*, 80 N. J. L. 542;

Bickley v. *Schlag*, 46 N. J. E. 533;

Sec. 14, Delaware Corporation Act, Ex. P. 2, R., Vol. 2, p. 283.

To hold that there has been a valid assessment against Fleissner in a proceeding to which he

was not a party by service of due process, is to deprive him of his property without due process of law in violation of the federal and state constitution. (New Jersey Constitution, Art. 1, Sec. 1; United States Constitution, 5th and 14th Amendments.)

A distincton must be made between a stock assessment in bankruptcy proceedings against a stockholder and an assessment against one not a stockholder. A stockholder is so far an integral part of the corporation that he is deemed to be in court in bankruptcy proceedings against his company.

In re *Newfoundland Syndicate*, 196 Fed. 443 (N. J.) (Aff'd 201 Fed. 917);

Hawkins v. *Glenn*, 131 U. S. 319, 33 L. Ed. 184;

Bernheimer v. *Converse*, 206 U. S. 516, 51 L. Ed. 1163;

McDermott v. *Woodhouse*, 87 N. J. E. 615 (Ct. of Errors).

In re *Newfoundland Syndicate* (196 Fed), at p. 447:

> "The stockholders of a bankrupt corporation in their corporate capacity are in court from the institution of the bankruptcy proceedings and are as much bound by the administration of such estate as the corporate entity itself."

Bernheimer v. *Converse*, at p. 532:

> "It is true that the stockholder is not necessarily served with process in the action wherein the assessment is made under the act of 1899, but no personal judgment is rendered against him in that proceeding, and it has reference to a corporation of which he is a member by virtue of his holding stock therein, and the proceeding has for its purpose the liquidation of the affairs of the corporation, the collection and application of

> its assets and other liabilities which may be administered for the benefit of creditors. In such case it has been frequently held that the representation which a stockholder has by virtue of his membership in the corporation is all that he is entitled to."

Where that is the case, mailing of notice to the stockholder of the assessment proceedings is sufficient and there are many cases so holding, but we have found no case holding that one not a stockholder is a party to bankruptcy proceedings brought against the corporation so as to be bound by assessment proceedings by the mere mailing of notice.

In the instant case Fleissner was not a stockholder at the time of the institution of the bankruptcy proceedings or the proceedings for assessment but had parted with his stock, which had been transferred out of his name, and ceased to have any beneficial interest therein, many months prior.

The assessment proceedings in the bankruptcy court involved not merely the making of a call for the balance of an unpaid subscription or the fixing of the necessity of the assessment and the amount, but involved the setting aside of the original contract of subscription between the promoters and the corporation on the ground of fraud, the stock being non-assessable, as pointed out above, until this contract had been set aside.

To hold that a resident of this state could be bound by the determination of a court of a foreign state in such a case, and that the foreign court could obtain jurisdiction over the person by the mere mailing of notice, abrogates every legal principle and violates the rights guaranteed by both our state and the federal constitution.

POINT V.

The Court erred in denying defendants' motion for a direction of a verdict for defendants. (Fifth Ground of Appeal, R., Vol. 1, p. 40, l. 14.)

Defendants moved for a direction of verdict upon the same grounds as the motion for the nonsuit (R., Vol. 1, p. 247, l. 27), and our argument under Point IV of this brief dealing with the court's denial of defendants' motion for a nonsuit applies here.

POINT VI.

The Court erroneously refused defendants' seventh request to charge the jury. (7th Ground of Appeal, R. Vol. 1, p. 40, l. 25; Requests, R. Vol. 1, p. 276, l. 26; Charge, R. Vol. 1, p. 266, l. 29.)

This request was as follows:

> "7. Even if you find that the defendant had actual knowledge of the fact that the stock which he purchased from Theodore Palmer was originally issued to the promoters in return for property at a gross overvaluation, or notice of such facts as would put a reasonable man on inquiry, the defendant is not liable for any assessment on any shares so purchased by him which he later sold and which were actually transferred on the books of the company prior to the time that the company was decreed insolvent in the bankruptcy proceedings in the United States District Court for the Southern District of New York."

We have covered the point that the transfer of the stock by Fleissner prior to the adjudication in the bankruptcy cause or the proceedings for the assessment of the stock relieved him from any liability for assessment under Point IV, Sub-

division (B) above. As we stated there, it is an admitted fact that these shares were transferred by Fleissner and out of his name about a year and a half before the institution of the bankruptcy proceedings (R., Vol. 1, pp. 108, 150 to 157, 179, 180; Ex. D. 1, R., Vol. 2, p. 475; Ex. P. 36, Vol. 2, p. 398).

It is submitted that if the case was properly submitted to the jury then the appellants were entitled to the requested instructions and the court erred in refusing the same. We refer to our argument under Point IV, Subdivision (B) above.

For the reasons there stated, the order levying the assessment made in the bankruptcy proceedings did not establish the fact that Fleissner was a stockholder or the number of shares on which he was subject to assessment.

The same argument applies to the refusal of the court to charge defendants 8th, 10th, 11th, 14th and 19th Requests (8th, 9th, 10th, 12th and 16th Grounds of Appeal, R., Vol. 1, pp. 41, 42, 43; Requests R., Vol. 1, pp. 277, 278, 279; Charge, R., Vol. 1, p. 266).

POINT VII.

The Court erroneously charged the jury that the Bankruptcy Court had the power to levy the assessment in this case. (19th Ground of Appeal, R. Vol. 1, p. 44, l. 10; Charge, R. Vol. 1, p. 253, l. 30; Defendants' exception to charge, R. Vol. 1, p. 267, l. 18.)

The argument under Point IV, Subdivision C applies here.

POINT VIII.

The Court erroneously charged the jury that there were only two principal defenses, (1) That Fleissner paid full value and (2) That he purchased the stock without notice of the overvaluation. (20th Ground of Appeal, R. Vol. 1, p. 44, l. 24; Charge, R. Vol. 1, pp. 254, 268, l. 25; Defendants' exception to charge, R. Vol. 1, p. 267, l. 29.)

This left out of consideration the defense that the defendant was not a stockholder at the time of the bankruptcy proceedings or of the assessment, presented as a ground for non-suit and for a direction of verdict and covered by the defendants' Seventh, Eighth, Tenth, Eleventh, Fourteenth and Nineteenth Requests to Charge. (Requests, R., Vol. 1, pp. 276, 277, 278, 279).

The arguments advanced under Point IV Subdivision B, and under Point VI, apply to this Point.

POINT IX.

The Court erroneously refused defendants' seventeenth request to charge the jury. (15th Ground of Appeal, R. Vol. 1, p. 42, l. 40; Requests, R. Vol. 1, p. 278, l. 38; Charge, R. Vol. 1, p. 266.)

Assuming that the District Court had jurisdiction to make the assessment, the assessment did not preclude Fleissner from setting up in the action to enforce it defenses which were personal to himself, and the assessment was conclusive only as to the necessity of the assessment, the debts, the assets and the rate of assessment.

In re *Newfoundland Syndicate*, 196 Fed. 443.

We have argued this more fully in connection with Point IV.

POINT X.

The assessment against Fleissner made by the United States District Court for the Southern District of New York in the bankruptcy proceedings to which Fleissner was not made a party by the service of due process, was invalid in that it deprived Fleissner of his property without due process of law in violation of his constitutional rights under Article 1, Section 1, of the New Jersey Constitution and the Fifth and Fourteenth amendments of the United States Constitution and the judgment of the Court below based upon this assessment was error. (41st and 43rd Grounds of Appeal, R. Vol. 1, pp. 49, 50; Motion for non-suit, R. Vol. 1, p. 242, l. 34; Motion for direction of verdict, R. Vol. 1, p. 247, l. 28; Amendment to answer, R. Vol. 1, p. 25, Rider A.)

At the time of the bankruptcy proceedings and the proceedings for the assessment, Fleissner was not a stockholder of the company and was not a party to those proceedings. The principle that a stockholder is so far an integral part of the corporation that he is deemed to be in court in bankruptcy proceedings against the company and that notice by mailing of the proceedings for assessment is sufficient, has no application.

The proceedings for the assessment in the instant case were something more than making a call for an unpaid balance of subscription. They involved the setting aside of the original contract between the promoters of the corporation on the ground of fraud, as until that contract

was set aside the stock was full paid and non-assessable. Assuming that the bankruptcy court would have jurisdiction to set aside this contract in those proceedings on the petition of the trustee, the decision setting aside the contract would be binding only upon those who were parties to those proceedings. To hold that one not a party to those proceedings would be bound by the finding of the court that the original contract was fraudulent and must be set aside, as to the amount of the debts, the amount of the assets, the amount of the assessment per share, the ability of those assessed to pay and the fact that the person not a party is assessable, and to hold that the assessment so made was conclusive and binding upon the person assessed in an action to enforce the assessment against him, would be to deprive him of his right to his day in court and his constitutional right to due process.

We have found no decision holding that a person not a stockholder of the corporation, over whom the bankruptcy court has not obtained jurisdiction by the service of legal process, is bound by the order for assessment.

It is submitted that the bankruptcy court in New York did not obtain jurisdiction over Fleissner, a resident of this State, by the mere mailing of a copy of the order to show cause so as to require him to submit himself to that jurisdiction.

We refer to the argument under Point IV, Subdivisions (B) and (C).

POINT XI.

The Court erroneously permitted testimony as to the value of the assets purchased by the corporation from the promoters for which the corporate stock was issued.

The 21st, 23rd to 28th Grounds of Appeal, inclusive, fall within this Point (R., Vol. 1, p. 44, l. 35, 45 and 46). A general exception was allowed by the court to the admission of testimony of this character (R., Vol. 1, p. 64, l. 22, p. 68, l. 22, p. 78, l. 18).

This relates to the testimony of Benjamin F. Taylor (R., Vol. 1, p. 58, *et seq.*), Herbert W. Oviatt (R., Vol. 1, p. 98, *et seq.*), Henry F. Kurtz (R., Vol. 1, p. 101, *et seq.*), Harry A. Strachan (R., Vol. 1, p. 148, *et seq*), Logan Cresap (R., Vol. 1, p. 207, *et seq.*), Herbert H. Thompson (R., Vol. 1, p. 229), Rogers Bernie (R., Vol. 1, p. 231, *et seq.*), and Colman R. Sample (R., Vol. 1, p. 239).

It is submitted that the question of overvaluation was not before the court and was not an issue in this action. The court had no power in this action to enforce the assessment to determine whether or not the property had been overvalued. This was a matter for the courts of the domicile of the corporation and its determination was a question precedent to the right to bring the action to enforce the assessment.

There is no proof that Fleissner knew of the overvaluation, nor of facts charging him with a legal duty to investigate, and the testimony of these witnesses as to the actual value of the property has no bearing on the question whether Fleissner knew or should have known, of the original overvaluation for which the stock was issued.

POINT XII.

The Court erroneously (when the witness, Benjamin F. Taylor, was on the stand) permitted an answer to the following question: "Q. Now, Mr. Taylor, I note in Exhibit P. 3, which is the minutes of the directors' meeting authorizing the acceptance of Mr. Sweeney's offer, there is this recital: 'After full and lengthy consideration and discussion among the members of the board of directors as to the value of and advisability of accepting Mr. Sweeney's offer, the following resolution was adopted.' Was there any full and lengthy consideration and discussion among the members?" and permitted, over objection, a line of testimony upon the same subject then under discussion. (38th Ground of Appeal, R. Vol. 1, p. 47, l. 35; R. Vol. 1, p. 76, l. 25 to p. 77.)

It is not shown that Fleissner had knowledge of this, nor are facts shown which in law charge him with making inquiry, and even if he had made inquiry, it does not appear that this would have resulted in his learning that there had not been a full discussion of the matter by the Board of Directors. The matter of fraud is not an issue in this case and the fact testified to by the witness that there was not a full discussion, does not show, or tend to show, knowledge on the part of Fleissner of the overvaluation, nor does it charge Fleissner in law with making inquiry unless it be shown that he knew that there had not been a full discussion.

POINT XIII.

The Court erroneously admitted in evidence letters patent, assignments and other documents relating to the property conveyed to the corporation by the promoters and the question of fraud and overvaluation. (30th and 39th Grounds of Appeal, R. Vol. 1, p. 46, l. 35; p. 48, l. 13; R. Vol. 1, pp. 61, 62, 64, 65, 66, 68, 69, 70, 75, 76, 102, 104, 166, 208, 214, 215.)

The argument under Point XI applies here.

POINT XIV.

The Court erroneously admitted in evidence certified copies of the adjudication in bankruptcy, of the order of reference, of the petition for assessment, of the order to show cause, of answers of some respondents to the petition for assessment and of the order levying the assessment. (32nd, 33rd, 34th, 35th, 36th and 37th Grounds of Appeal, R. Vol. 1, p. 47; R. Vol. 1, pp. 193, 194 ,195, 196, 197, 200.)

Fleissner was not a party to these proceedings and therefore the various orders made were not binding upon him. We refer to the argument under Point IV, Subdivisions (B) and (C), and Point X.

Furthermore the petition for assessment was entirely irrelevant and immaterial. The action is based upon the order levying the assessment and the petition contains statements of facts and conclusions which are hearsay and prejudicial to the defendants. The same applies to the answers filed by some of the respondents to the petition for assessment (Ex. P. 55, R., Vol. 2, p. 457; Ex. P. 53, R., Vol. 2, p. 431).

The judgment appealed from should be reversed.

Respectfully submitted,

PITNEY, HARDIN & SKINNER,
Attorneys for Defendants-Appellants.

CARL A. FEICK,
Of Counsel.

Arthur W. Cross, Law Printer, 55-57 Lafayette Street, Newark, N. J.

New Jersey Court of Errors and Appeals

JAMES G. GRAHAM, Trustee in Bankruptcy of Maxim Corporation, *Plaintiff-Appellee,* *vs.* THERESA LOUISE FLEISSNER, CHRISTIAN FLEISSNER, JR., and FIDELITY UNION TRUST COMPANY, as Executors of the Last Will and Testament of Christian Fleissner, deceased, *Defendants-Appellants.*	*Action at Law.* *Appeal from Supreme Court.*

REPLY BRIEF FOR DEFENDANTS-APPELLANTS.

In answer to appellants' contention that Fleissner is not liable to further assessment because he had sold all of the stock and was not a stockholder at the time of the bankruptcy proceedings or the proceedings for the assessment and that therefore the Court below should have granted the motion for non-suit or direction of a verdict, argued under Point IV, Subdivision (B) of appellants' brief at page 38, the appellee, under Point II of his brief at page 30, contends that the transfer of the ownership of this stock by Fleissner does not exempt him from liability because presumably it was to a person or persons exempt from liability.

This is the first time that this contention has been made. It was not advanced at the trial nor is there any proof that the transfers were to persons who are exempt from liability. The theory on which the case was tried was that

Fleissner was liable to assessment notwithstanding that he had sold his stock and was no longer a stockholder. As argued by appellants, at page 49 of their brief, that was the law of the case and the refusal to non-suit or to direct a verdict cannot now be justified for the first time on some other theory.

But aside from this, the question of whether or not the persons to whom the stock was transferred and sold would be subject to assessment has nothing to do with the question of whether Fleissner was relieved from liability for assessment by the transfer. The correct principle in this respect is stated in *Thompson on Corporations*, 2nd Ed., Vol. 4, Secs. 4371, 4373 and 4826, and in *Hood* v. *McNaughton*, cited in appellants' brief at pages 40 and 41. This is that a transferrer is relieved from liability for assessment for unpaid stock or from the liability imposed by statute by a good faith transfer of the stock. Nowhere do the authorities rest this principal upon the fact that the transferee becomes liable for assessment and that therefore the transferrer is relieved of liability on the theory of novation. It rests upon the incidents attaching in law to the ownership of corporate stock. A subscriber to corporate stock, whether the subscription is to be paid in cash or by the conveyance of property, is liable on the contract of subscription, and where payment is made by property at a gross overvaluation so that the par value of the stock has not been paid, the law implies an agreement to pay the balance of the subscription price, the liability for which cannot be escaped by transfer of the stock. But in the case of a purchaser, as distinguished from a subscriber, there is no contract of subscription. If he took with notice, actual or constructive, that

the stock was not fully paid, one of the incidents of his ownership of the stock is that he is liable for a further call or assessment, but this liability ceases when he transfers the stock in good faith and is no longer a member of the corporation.

In determining whether such a transfer exempts the purchaser, as distinguished from a subscriber, from liability, the test is whether the transfer was made in good faith, or whether it was made to escape the liability, and not whether the transferee can be held liable. There is no distinction in this respect between a call for the balance of the unpaid subscription price and the case of stock issued for property at an overvaluation. The legal principles are the same. Fleissner by his purchase of the stock, if he had knowledge of the original overvaluation, assumed such liability as the law attached to him as the owner of the stock, and this was a liability to assessment so long as he held the stock and remained a member of the corporation. Just as in the case of an unpaid balance of a cash subscription, his liability ceased when he transferred the stock in good faith. He did not assume by his purchase to make good for the overvaluation placed upon the property by the original subscribers with which he was in no way connected. The fact that when he purchased the stock he was charged in law with knowledge of the fact that the stock was originally issued for property at an overvaluation, is essential to recovery against him, *not because it increases his liability for assessment on the ground that it makes him a party to the original overvaluation, but because in the absence of such knowledge he would not be liable at all as a bona fide purchaser.*

That the sole test as to whether the transfer relieves the transferrer from liability is whether or not it was made in good faith and not whether there can be a recovery against the transferee, is illustrated by the principle applied to the case of a transfer of bank stock to an insolvent purchaser where the courts hold that the transfer relieves the transferrer from liability, notwithstanding the insolvency of the transferee, if the insolvency of the transferee was unknown to the transferrer.

Earl v. *Carson*, 188 U. S. 42, 47 L. Ed. 373 (cited at p. 41 of appellants' brief);

Bowden v. *Johnson*, 107 U. S. 251, Sub. Nom. *Adams* v. *Johnson*, 27 L. Ed. 386;

Whitney v. *Butler*, 118 U. S. 655, 30 L. Ed. 266.

Appellee argues, at page 34 of his brief, that the notice which makes the transferee liable, charges him with the original fraud as effectually as if he had participated in the original transaction and in this connection cites the cases of *Rhode* v. *Dock-Hop Co.*, 188 Cal. 367; and *Allenhurst Park Estates* v. *Smith*, 101 N. J. E. 581, at p. 607. Neither of these cases support this proposition.

In *Rhode* v. *Dock-Hop Co.*, *supra*, the complaint alleged that the defendants were subscribers and stockholders. The Court held that the persons to whom the stock was issued were not subscribers nor liable as subscribers in a suit to enforce the stockholder's liability and that to hold them liable it must appear that they had notice. What the Court said was that if they had notice, they could be held as stockholders. The persons against whom the assessments were sought were still stockholders and the effect of a

transfer upon their liability, assuming that they had notice, was not involved.

In *Allenhurst Park Estates* v. *Smith, supra* (Berry, *V.-C.*), the bill was filed by the company to recover secret profits from the promoters. The Court held that where promoters, contemplating a future issue or sale of stock by the corporation, sell property to the corporation at a gross overvaluation and thereby or otherwise receive a secret profit from the corporation and the stock is subsequently issued to innocent purchasers, the corporation may sue the promoters to recover such secret profits, but that this rule does not apply to subsequent purchasers of stock from the promoters or other stockholders and not from the corporation and that their remedy is by individual action, nor does it apply in favor of subsequent purchasers of stock from the corporation where they took with knowledge of the facts. The case did not involve in any way the effect of a transfer on the liability of the transferrer for further assessment.

The Court took pains to point out that the liability of a stockholder for assessment was not involved. At p. 598:

> "And in considering the issues here involved, certain negative propositions should be borne in mind. The rights of creditors, as such, are *not* in controversy; the complainant company is perfectly solvent and is *not* in the hands of a receiver; the question of assessment against stockholders for unpaid subscriptions to provide funds for the payment of debts is *not* involved. It is *not* alleged that the property sold to the company by Smith and Russell was worth less than the company paid for it."

The distinction between a subscriber and a transferee as recognized in the case of *Hood* v.

New Jersey State Library

McNaughton, supra, is too well established to require further argument.

Appellee says in his brief at page 68:

> "We do not charge that the promoters acted dishonestly or with a corrupt motive."

His contention is that the property was not worth the par value of the stock issued for it and that therefore the subscription for the stock had not been paid. As we said above, there is no distinction between such a case and a case where there is an unpaid balance due on a cash subscription for stock. A purchaser of stock with notice of the overvaluation, does not become a subscriber and liable as such, but he can be assessed as a stockholder so long as he holds the stock, having notice of the fact that the full capital has not been paid in. When he transfers the stock in good faith, his liability ceases just as in the case of an unpaid balance of a cash subscription.

Appellee, at page 35 of his brief, cites the case of *Palmer* v. *Scheftel,* 194 App. Div. 682, found also in 186 N. Y. S. 84, to the effect that a transfer of watered stock to a person not amenable to assessment thereon does not relieve the transferrer. This case is no authority for that proposition. That case deals entirely with the liability of a *subscriber* and holds that a *subscriber* for watered stock which has not been paid for because of gross overvaluation, remains liable notwithstanding a transfer, because in that case there is a contractual liability on the subscriber to pay for the stock.

The citation from *Cook on Corporations,* Vol. 1, 8th Ed. p. 851, in appellee's brief at page 35, is taken from Section 255 beginning at page 848. This section deals only with the effect of a trans-

fer on the liability of a subscriber and has nothing to do with the effect of a transfer on the liability of a purchaser of the stock. As appears from this Section and the cases cited by the author, "the person so receiving the stock," refers to the person to whom the stock was issued for the property overvalued.

Under the common law a stockholder could transfer his stock at any time and was thereafter relieved of *all* liability on account thereof.
Tucker v Gilman 121 NY 189; 24 NE 302

Fidelity & Columbia Transfer Co. v. *Edelen*, 195 S. W. 447 (Ky.). In this case a trustee in bankruptcy sued to recover unpaid stock subscriptions. The state statute provided:

> "No transfer of stock shall operate as a release of any such liability existing at the time of such transfer."

The Court held that this statute must be strictly construed, as at common law the stockholder was relieved of all liability by a transfer.

To overcome the common law rule that a transfer relieves from all liability, some states have adopted statutes similar to the Kentucky statute providing, in express terms, that a transfer should not relieve from the liability imposed by the statute.

> *Wishard* v. *Hansen*, 99 Ia. 307, 68 N. W. 691;
>
> *Sprague* v. *National Bank of America*, 172 Ill. 149, 50 N. E. 19, 64 Am. St. Rep. 17;
>
> *White* v. *Greene*, 70 N. W. 182, at p. 184.
>
> "Appellant contends in support of the second defense pleaded by him that he was released from liability for corporate debts by reason of the sale of his stock on March 9, 1892. That such is the general rule must be conceded. See Thomp. Corp. Secs. 3221, 3222, and cases cited; Beach. Priv. Corp.

Secs. 125, 126, 705-707; Cook, Stock & S. Secs. 255, 256."

And cases cited by appellee at pp. 39 to 43 of his brief.

It is only in those cases where the state statute expressly provides that a transfer shall not relieve the transferrer from liability that it has been held a purchaser of stock as distinguished from a subscriber or promoter, is not relieved of liability for assessment by a transfer of his stock.

As pointed out the Delaware statute, which controls the instant case, has no such provision, but expressly, in Section 20, limits the liability *to holders of stock on each share held by them.*

It is to be noted that appellee does not cite a single authority holding that a transferee or purchaser (as distinguished from a subscriber or promoter) of stock which was originally issued for property at a gross overvaluation, is not relieved of liability for a future assessment by a good faith transfer, where there is no express provision in the state statute providing that a transfer shall not relieve from liability.

Appellee argues, at page 35 of his brief, that because Fleissner loaned to the company the proceeds of 2,231 shares of the stock which he sold, the sale of these shares does not relieve him from liability for assessment. It is submitted that the fact that he loaned the proceeds to the company does not change the rule contended for. The fact is that he sold the stock and ceased to be a stockholder, and the fact that he became a creditor of the company for the proceeds which he loaned to the company does not change the legal principle applicable.

The same argument applies as to the shares donated by him to the treasury.

Appellee further argues, at p. 37 of his brief, that because the bankruptcy court took all of the facts into consideration and gave credit, there was no occasion for the Court below to charge as requested by appellants that the order of the bankruptcy court was not binding as to the number of shares for which the defendant could be assessed. (Seventeenth Request.) The question is not whether proper credit was given in the bankruptcy proceedings, but whether Fleissner was relieved from liability for any assessment by reason of the transfer of the stock. The question of whether or not Fleissner was a stockholder is a personal defense as to which he is not precluded by the assessment. We refer to the authorities cited at page 47 of our brief.

In reply to appellants' argument that Fleissner was not a party to the bankruptcy proceedings because he was not a stockholder at that time and that therefore the mere mailing of notice was insufficient, appellee argues under Point III of his brief, at page 38, that the rule that such notice is sufficient depends on whether the person assessed was liable for the assessment. This begs the question. The theory under which the courts have held that such notice is sufficient is that a stockholder is so far an integral part of the corporation that he is present in the bankruptcy proceedings. It may conceivably be that where a stockholder is rendered liable to assessment notwithstanding a transfer, by an express statutory provision to that effect, mere notice by mailing may be sufficient, but that rule has no application to the instant case. All of the cases cited by appellee, at pages 39 to 43 of his brief, involve statutory liability under

statutes which expressly provide that a transfer should not relieve the transferrer from the statutory liability or are cases where the assessment was against a person who was a stockholder at the time.

Respectfully submitted,

PITNEY, HARDIN & SKINNER,
Attorneys for Defendants-Appellants.

CARL A. FEICK,
Of Counsel.

New Jersey Court of Errors and Appeals.

JAMES G. GRAHAM, Trustee in Bankruptcy of Maxim Corporation,
Plaintiff-Respondent,

vs.

THERESA LOUISA FLEISSNER, CHRISTIAN FLEISSNER, JR., and FIDELITY UNION TRUST COMPANY, as Executors of the Last Will and Testament of Christian Fleissner, deceased,
Defendants-Appellants.

On Appeal from Supreme Court.

RESPONDENT'S BRIEF.

The action at law in which this appeal arises was brought by the trustee in bankruptcy of a Delaware corporation against the defendants' testator, Christian Fleissner, to enforce a decree of the bankruptcy court assessing 6,375 shares of stock which Mr. Fleissner owned for a period of time prior to the bankruptcy.

The defendants attack the judgment on five principal grounds: (*a*) that an action at law of this character is prohibited by statute (P. L. 1897, c. 50, p. 124; 2 Comp. Stat., p. 1656); (*b*) that the transfer of ownership of the shares prior to the bankruptcy relieved Mr. Fleissner of liability; (*c*) that Mr. Fleissner not being a stockholder of record at the time of the assessment proceeding in the bankruptcy court, the mailing to him of notice of such proceeding was insufficient service of process; (*d*) that the evidence on the question whether Mr. Fleissner acquired the shares with notice that they

had not been fully paid was insufficient to go to the jury; and (*e*) that the Trial Court erred in the admission of certain evidence.

In so far as necessary, the facts will be stated under the appropriate points of the argument.

Summary of Argument.

POINT I. P. L. 1897, c. 50, neither in purpose nor in language, prohibits an action at law to enforce an assessment levied on "watered" stock by a tribunal having jurisdiction of the corporation, its stockholders and creditors for that purpose; if construed to have such effect the statute would be repugnant to the federal constitution.

POINT II. The transfer of ownership of "watered" stock by a person liable thereon to a person exempt from liability does not relieve the transferor of liability.

POINT III. Notice of a hearing by the bankruptcy court of a petition for assessment of the "watered" stock of a bankrupt corporation is sufficiently given if mailed to a non-resident who has formerly acquired shares of the stock under circumstances sufficient to charge him with liability thereon and is still subject to such liability.

POINT IV. The plaintiff made out a sufficient case to go to the jury on the question whether the defendants' testator acquired 6,375 shares of stock of the Delaware corporation under such circumstances as to charge him with notice of the fact that the shares were not fully paid.

POINT V. The Trial Court did not err in the admission of evidence (1) as to the original issue of the stock, (2) as to the bankruptcy proceedings.

POINT I.

P. L. 1897, c. 50, neither in purpose nor in language, prohibits an action at law to enforce an assessment levied on "watered" stock by a tribunal having jurisdiction of the corporation, its stockholders and creditors for that purpose; if construed to have such effect the statute would be repugnant to the federal constitution.

The provision relied on by the defendants is as follows:

> "2. No action or proceeding shall be maintained in any court of law of this state against any stockholder, officer or director of any domestic or foreign corporation by or on behalf of any creditor of such corporation to enforce any statutory personal liability of such stockholder, officer or director for or upon any debt, default or obligation of such corporation, whether such statutory personal liability be deemed penal or contractual, if such statutory personal liability be created by or arise from the statutes or laws of any other state or foreign country, and no pending or future action or proceeding to enforce any such statutory personal liability shall be maintained in any court of this state other than in a nature of an equitable accounting for the proportionate benefit of all parties interested, to which such corporation and its legal representatives, if any, and all of its creditors and all of its stockholders shall be necessary parties."
>
> (P. L. 1897, c. 50, p. 125; *Comp. Stat.*, p. 1656.)

(1) *The liability here sued on is not a "statutory" liability.*

As by reason of the practical identity of certain provisions of the General Corporation Law of Delaware with the corresponding provisions of the Corporation Act (Revision of 1896) of New Jersey the courts of Delaware give "great weight" to the decisions of the courts of this State (*John W. Cooney Co.* v. *Arlington Hotel Co.*, 11 Del. Ch. 286, 303; 101 Atl. 879, 887), the provisions of the two laws are here set forth in parallel columns:

Delaware	New Jersey
General Corporation Law	Corporation Act (Revision of 1896)
"Sec. 20. Stockholders Liability for Part Paid for Stock:—When the whole capital stock of a corporation shall not have been paid in, and the assets shall be insufficient to satisfy the claims of its creditors, each stockholder shall be bound to pay on each share held by him the sum necessary to complete the amount of the par value of such share as fixed by the charter of the company or its certificate of incorporation, or such proportion of that sum as shall be required to satisfy the debts of the company * * *." *Revised Code of 1915*, § 1934.	"21. Liability of stockholders on non-paid-up stock.—Where the whole capital of a corporation shall not have been paid in, and the capital paid shall be insufficient to satisfy its debts and obligations, each stockholder shall be bound to pay on each share held by him the sum necessary to complete the amount of such share, as fixed by the charter of the corporation, or such proportion of that sum as shall be required to satisfy such debts and obligations." *Comp. Stat.*, p. 1610.

"Sec. 14. Issuance of Stock for Labor or Real or Personal Property:—Subscriptions to, or purchase of, the capital stock of any corporation organized or to be organized under any law of this State may be paid for, wholly or partly, by cash, by labor done, by personal property or by real property or leases thereof; and the stock so issued shall be declared and taken to be full paid stock and not liable to any further call, nor shall the holder thereof be liable for any further payments under the provisions of this Chapter. And in the absence of actual fraud in the transaction, the judgment of the Directors, as to the value of such labor, property, real estate or leases, shall be conclusive."

Revised Code of 1915, § 1928.

"49. Purchase of property and issue of stock to pay therefor.—Any corporation formed under this act may purchase mines, manufactories or other property necessary for its business, * * * and issue stock to the amount of the value thereof in payment therefor, and the stock so issued shall be full-paid stock and not liable to any further call, neither shall the holder thereof be liable for any further payment under any of the provisions of this act; and in the absence of actual fraud in the transaction, the judgment of the directors as to the value of the property purchased shall be conclusive; * * *."

Comp. Stat., p. 1630.

The liability of the owners of "watered" stock of a Delaware corporation for the corporate debts was considered at length in the opinion of the Chancellor in *John W. Cooney Co.* v. *Arlington Hotel Co., supra;* and in the opinion of the Supreme Court in the same case (*DuPont* v. *Ball,* 11 Del. Ch. 430; 106 Atl. 39). There it was held that the acceptance of shares of stock of a Delaware corporation having a par value by persons other than innocent purchasers for value without notice, raised an implied promise to pay the unpaid portion of

such par value, and that the right to enforce such promise upon the insolvency of the corporation became part of the assets to be administered for the benefit of the creditors. This was tantamount to holding that so far as the enforcement for the benefit of creditors was concerned, the liability was similar to that of subscribers. The question whether the liability was a statutory one or arose from general principles of law such as the "trust fund doctrine" or the "holding-out doctrine", or any other doctrine, was left open by the Delaware courts, but it is a fair inference from the opinions of the Chancellor and the Supreme Court above cited that the liability to pay the par value of shares of stock not fully paid up in accordance with Section 14 of the General Corporation Law of Delaware would be held to exist even in the absence of Section 20 of that statute. The liability is not, therefore, "statutory" in the sense that it is imposed solely by operation of the statute. Similarly a provision of the Constitution of Oregon, providing that stockholders should be liable for the corporate indebtedness to the amount unpaid on their stock, was held by the United States Supreme Court not to have created a new right, but simply to have "provided for the preservation of an old one" (*Patterson* v. *Lynde,* 106 U. S. 519). Of course, if there were no statute of Delaware providing for the formation of corporations, there could be no liability of stockholders in Delaware corporations; in that broader sense of the term, the liability may be conceded to be "statutory". But the expression "statutory liability" of stockholders has been given a special significance by writers on corporation law, and it is believed that in such narrower sense the liability here sued on is not "statutory".

> "Probably the most characteristic feature of a corporate existence is the fact that, by being

a corporation, its stockholders are liable only for the par value of the stock held by them, and when that is once paid in money or property there is no further liability. * * * The very fact of incorporation by itself releases subscribers for stock from all liability for corporate debts, except to the extent of their unpaid subscriptions. The State Legislatures, however, in many instances, desire to increase the liability of stockholders to corporate creditors. Accordingly, statutes are passed expressly declaring that stockholders shall be liable for a specified sum, *in addition to their unpaid subscriptions.** This is called the *statutory liability of stockholders.* It rarely exists as regards stockholders in railroad corporations, but frequently exists in the case of manufacturing and various other corporations, and nearly always exists against stockholders in banks and trust companies."

1 *Cook on Corporations,* 8th Ed., Sec. 212.

"There are two distinct kinds of liability of stockholders in foreign corporations which there may be an attempt to enforce at their residence or elsewhere outside of the state of incorporation. One is the liability for unpaid subscriptions of stock, which is clearly a contractual liability, * * * *the other kind of liability is that statutory liability which continues after the stockholder has fully paid for his stock,* and which is in the nature of a guaranty or indemnity to the creditors of the corporation against its failure to pay its obligations."

34 *L. R. A.* 737.

See also:

Thompson on Corporations (3d ed.), Sec. 4800;

Fletcher Cyc. Corps., § 4094.

* All italics in quoted matter appearing in this brief are ours.

That the liability here sued on is not a "statutory" liability in the sense of the words used in the above quotations, is conclusively shown by the opinion of the Supreme Court of Delaware in *DuPont* v. *Ball, supra,* where the Court had before it a proceeding to assess stock of a Delaware corporation issued as full paid and non-assessable but which was, in fact, not paid, *i. e.,* "watered" stock, and said (11 Del. Ch. at p. 437; 106 Atl. at p. 42):

> "The appellants argued strongly and with much confidence that receivers could not, under the law, enforce a stockholder's liability created by statute, as in this case, and cited many authorities which seemed to sustain such proposition. But upon examination the cases referred to do not seem to us to be applicable to the present case. *The statute of this State is unlike those that impose a liability upon the stockholder beyond the amount of his unpaid stock, such as double liability statutes. Appellant's cases, for the most part, as well as their citation from 1 Cook on Corporations, (7th Ed.) § 218, involved what may be termed double or additional liability laws.* At §§ 212, 213, the beginning of the treatise on this subject, it is said:
>
> > 'The state Legislatures, however, in many instances, desire to increase the liability of stockholders to corporate creditors. Accordingly, statutes are passed expressly declaring that the stockholders shall be liable for a specified sum, in addition to their unpaid subscriptions.'
>
> "It is this kind of liability that is meant when 'statutory liability' is referred to, and Mr. Cook says:
>
> > 'This is called the statutory liability of stockholders.'
>
> "The failure to note the distinction between the liability of stockholders to the extent of the par value of their stock and the *statutory lia-*

> *bility* in excess thereof, has resulted in some confusion in the cases and textbooks. The first mentioned, or ordinary liability, is an asset of the corporation, and the second or additional liability is not, it being a liability directly to the creditors, which a receiver, in the absence of statutory authority, has no power to enforce; and it is not resorted to if the assets of the corporation, including unpaid stock, are sufficient to pay the creditors."

Certain statutes of the class mentioned in the quotations given above purport to give to any creditor of the corporation a direct right of action against any stockholder and require no proceeding in the nature of an equitable accounting in order to determine the fair proportion of the debts for which each stockholder should be held. The harsh results to which the operation of such statutes may lead, have induced the courts of many states to refuse to give extraterritorial effect to such statutes (see cases, 7 *Fletcher Cyc. Corps.* Sec. 4248, n. 85-88). Some courts have laid down the policy that extraterritorial effect will not be given to such statutes, unless an equitable accounting has been had and a fair proportion fixed in which the stockholder before the court is to be held (*Marshall* v. *Sherman,* 148 N. Y. 9).

Were the action at bar brought directly by a single creditor of a Delaware corporation against a single stockholder, say under Section 49 of the General Corporation Law of Delaware (*Code of 1915,* § 1963), it might be said that the remedy at least, if not the liability, was one created by the Delaware statute. But, in the action at bar neither the liability nor the remedy is "statutory" in the sense of having been created by the Delaware statute. The liability, as has been shown, is not of the class referred to by the authorities as "statutory". The remedy was not created by the Delaware statute but is the second branch of the

procedure approved by the courts of Delaware independently of the statute, namely, the twofold remedy of a preliminary assessment proceeding in the tribunal having jurisdiction of the corporation, its creditors and stockholders, and subsequent actions in tribunals having plenary jurisdiction of the persons assessed. This twofold form of remedy was approved in the *Arlington Hotel* case (*John W. Cooney Co.* v. *Arlington Hotel Co.* and *DuPont* v. *Ball, supra*) where the preliminary assessment proceeding took place in a statutory insolvency suit pending in the court of chancery of Delaware. In cases where the Delaware corporation is adjudicated bankrupt, the preliminary assessment proceeding properly takes place as part of the bankruptcy proceeding whether or not the bankruptcy court be located in Delaware or in any other district where the Bankruptcy Act confers jurisdiction over the Delaware corporation (*Wallace* v. *Weinstein,* 257 Fed. 625; *In re Pipe Line Oil Co.,* 289 Fed. 698).

Turning, now, to the language of P. L. 1897, c. 50, it is obvious that the action at bar does not come within the prohibition of the statute.

(2) *The term "statutory personal liability" as used in the statute refers to a liability for amounts in excess of the par value of the stock.*

A similar term is used in Section 1 of the act, which, in almost identical language with that used in Section 2, prohibits an action to enforce the statutory personal liability of a stockholder, officer or director of any *domestic* corporation if such liability be created or arise under the statutes or laws of any other state or foreign country. As used in Section 1, the term "statutory personal liability" certainly does not include a liability for "watered" stock; for such a liability is not created by and does not arise from the statute of a state other

than the state of incorporation. The reference must be to such a liability as might be imposed by the statutes, say, of California on stockholders of a New Jersey corporation doing business in California (*Thomas* v. *Matthiessen,* 232 U. S. 221). Likewise in Section 2 the term "statutory personal liability" must be deemed to refer only to that class of liability which as shown above is known as "statutory".

That the words "statutory personal liability" as used in both sections of the act refer to the special kind of stockholders liability above mentioned is also indicated by the juxtaposition of the words "stockholders, officers or directors". In the case of officers or directors there are also two classes of liability, the first existing independently of statute, *e. g.* for breach of fiduciary obligations and enforceable by the corporation or its representative for the benefit of all of the stockholders, or in the case of insolvency of all of the creditors. The second class of liability of officers or directors is that created by statute, *e. g.* for violation of mandatory provisions, and running not derivatively through the corporation but directly to the creditors. The liability of officers or directors of the second class created by a foreign statute falls within the terms of the act and is required to be enforced in the court of chancery for the benefit of all creditors proportionately.

Another indication that when the legislature referred to the "statutory personal liability of such stockholder, officer or director" for a debt of the corporation, it referred only to the special class of stockholders' liability above mentioned, may be found in Section 92 of the General Corporation Act (Revision of 1896), which provides as follows:

> "When the officers, directors or stockholders of any corporation shall be liable to pay the debts of the corporation, or any part thereof,

> any person to whom they are liable may have an action against any one or more of them; and the declaration shall state the claim against the corporation, and the ground on which the plaintiff expects to charge the defendants personally; or the person to whom they are liable may have his remedy by bill in chancery."
>
> *Comp. Stat.*, page 1655.

Section 92 was derived from Sections 93 and 94 of the Corporation Act (Revision of 1875), which this Court held not to have any relevancy to a suit for the enforcement of the liability of stockholders for "watered" stock, saying:

> "These sections relate to cases where officers, directors or stockholders are made liable by the provisions of the act, specifically, for the payment of the debts of the company, or any part thereof, and provide in such cases for actions by any person to whom they are so liable."
>
> *Wetherbee* v. *Baker*, 35 N. J. Eq. 501, at page 505.

It was held in the case last cited that a suit by a single creditor for the enforcement of stockholders' liability for "watered" stock of a New Jersey corporation could not be maintained, but that an equitable accounting would first have to be had to which all of the creditors and stockholders would be parties. The liability for "watered" stock, while to a certain extent based on the General Corporation Act of New Jersey, was not that special sort of stockholders' liability which is analogous in character to the liability of directors and officers running directly to creditors. If this Court so construed Sections 93 and 94 of the General Corporation Act of 1875, a similar construction should now be put upon the reference

to the liability of stockholders, officers and directors appearing in P. L. 1897, c. 50.

So, while the liability of a director, officer or stockholder *created by a statute of New Jersey* may be enforced by a single creditor suing at law (*Waters* v. *Quimby,* 27 N. J. L. 296; aff'd 28 *id.* 533), a liability of similar character *created by foreign statute* may not, in the case of New Jersey corporations, be enforced in this state at all, and, in the case of foreign corporations, may be enforced only in a suit in the nature of an equitable accounting. That is the net effect of Section 92 of the Corporation Act (Revision of 1896) and of P. L. 1897, c. 50. But, as has been shown, the legislative reference in both instances is to "statutory" liabilities, in the narrower sense. In the case of a liability not "statutory", *e. g.* that on "watered" stock, if the corporation is domestic, Section 92 does not apply, but an equitable accounting is essential (*Wetherbee* v. *Baker, supra*); if the corporation is foreign, P. L. 1897, c. 50, does not apply, and an equitable accounting is not to be had in the New Jersey courts (*infra,* pp. 17-18).

The use of the words "whether such statutory personal liability be deemed penal or contractual" is another indication that the legislature had in mind only "statutory" liabilities in the narrower sense, for a liability for "watered" stock could by no possibility be deemed penal, whereas considerable doubt had existed up to five years before the enactment of P. L. 1897, c. 50, as to whether "statutory" liabilities of officers, directors or stockholders were penal and therefore not enforceable extraterritorially (25 A. L. R. 1428 *et seq.*). In this state, for example, the liability of officers for filing a false certificate under the New York law had been held penal and unenforceable (*Derrickson* v. *Smith,* 27 N. J. L. 166). In 1892 the contrary conclusion had been reached by the United States

Supreme Court (*Huntington* v. *Attrill,* 146 U. S. 657).

> "The liability of a stockholder *to an additional amount equal to his stock,* though created by statutory or constitutional provision, is, by the weight of authority, held to be contractual in its nature, where the parties voluntarily form a corporation under such provisions, or become stockholders while such provisions exist. * * *
>
> "Because it is contractual it is transitory, and the liability of a stockholder to an amount equal to his stock may be enforced against him in some appropriate form of action wherever he resides, even in a state other than the domicile of the corporation. * * *"
>
> 33 L. R. A. (n. s.) 895 at p. 898.

It was, therefore, natural for the legislature to refer to "statutory" liabilities as either penal or contractual.

But it is believed that the legislature intended by the use of the words "statutory personal liability" to refer to a still narrower class of liability than has been suggested above.

(3) *The term "statutory personal liability" as used in the statute refers only to claims against stockholders enforceable by a single creditor.*

It has been shown that in the case of domestic corporations, Section 92 of the Revision of 1896 has been held to refer only to "statutory" liabilities running directly to the creditors, and enforceable by a single creditor, and not to a liability constituting part of the assets of the corporation and enforceable by its receiver (*Wetherbee* v. *Baker, supra*). Likewise it is believed that P. L. 1897, c. 50 refers only to liabilities which are enforceable directly by one creditor, and not through the insolvent estate of the corporation. Ordinarily the "statutory" lia-

bility runs directly to the creditors (6 *Thompson on Corps.*, 3rd ed., § 4811), but under the statutes of some states the "statutory" liability of stockholders is an asset of the insolvent estate, enforceable by the domiciliary receiver after an equitable accounting and assessment. Such assessment is entitled to full faith and credit in other states (*Converse* v. *Hamilton*, 224 U. S. 243). P. L. 1897, c. 50 has no application to such "statutory" liabilities, for if there had been one assessment proceeding already in the home state, there would be no need of another in New Jersey.

That the legislature did not refer to liabilities enforceable by a receiver for the benefit of all creditors is shown by the use of the words "any debt, default or obligation" and of the words "by or on behalf of any creditor" in the singular rather than in the plural number. An action or proceeding by a receiver for the benefit of all creditors to enforce liability for *all* debts is essentially different from an action by a *single* creditor to enforce liability for *his* debt. The latter kind of action was what the legislature sought to prevent, in cases where the foreign statute permitted it. The use of the term "any creditor" in the singular number in describing the class of liability covered by the act was not inadvertent, for in describing the mode of enforcing such liability the draftsman took care to use the term "*all* of its creditors."

Giving to P. L. 1897, c. 50 the construction above suggested, it is clear that the action at bar does not come within its terms even if the liability sued on is held to be "statutory". This action is not one "by or on behalf of any creditor". It is rather one to enforce a right included in the assets of the corporation. While it is true that the corporation itself cannot enforce the stockholders' liability for "watered" stock, because the corporation is es-

topped by its own act in having issued the stock as full paid and non-assessable, yet the right to enforce the liability of holders of such stock in the case of Delaware corporations is an asset of the corporation (*John W. Cooney Co.* v. *Arlington Hotel Co., supra; DuPont* v. *Ball, supra*). When, therefore, the statutory receiver or the trustee in bankruptcy of the insolvent corporation proceeds to enforce the stockholders' liability for "watered" stock he is enforcing a right which belongs to the estate. While in a sense he represents the creditors, and if he is a trustee in bankruptcy is by the express terms of the Bankruptcy Act vested with certain rights of creditors as to property of the bankrupt (Sec. 47 [2]), yet except so far as otherwise provided by statute the rights of creditors to proceed against stockholders directly and not derivatively do not vest in the statutory receiver or trustee in bankruptcy (*In re Associated Oil Co.*, 289 Fed. 693). When, as here, the right to proceed against stockholders does vest in the statutory receiver or trustee in bankruptcy, then the proceeding instituted by such officer is not one "by or on behalf of any creditor."

(4) *The statute is to be given a reasonable construction.*

If it is held that P. L. 1897, c. 50 prohibits an action at law to enforce the liability of a New Jersey resident for "watered" stock in a Delaware corporation, then the statute forbids any action or proceeding at all to enforce such liability, for, as will be shown, the New Jersey court of chancery will not entertain such a proceeding. If this is the result of the statute, New Jersey owners of "watered" stock of Delaware corporations will escape all liability whatsoever so long as they and their property remain within the borders of this

state. Such an unreasonable result is not to be attributed to the legislature, if any other construction will result in a more reasonable condition of affairs.

The concluding clause of Section 2 of the act permits only an action or proceeding

> "in a [*sic*] nature of an equitable accounting for the proportionate benefit of all parties interested, to which such corporation and its legal representatives, if any, and all of its creditors and all of its stockholders shall be necessary parties."

Necessarily such action or proceeding would be in the court of chancery, since the opening clause of Section 2 forbids any action or proceeding at all in a court of law. A suit in the court of chancery to *enforce* the liability of a stockholder in the nature of an equitable accounting to which the corporation and all of its creditors and stockholders were parties would be a combination of an assessment proceeding and a plenary action for the enforcement of the assessment. Such a combined proceeding may be brought in the court of chancery in the case of a domestic corporation (*See* v. *Heppenheimer,* 69 N. J. Eq. 36); although where the persons liable are both residents and non-residents the two-fold procedure of a petition or bill in equity for assessment and plenary actions at law to enforce the assessment would appear to be the more efficacious method (*Bryson* v. *Conlen,* not officially reported, 7 N. J. Adv. R. 273; *Holcombe* v. *Trenton White City Co.,* 80 N. J. Eq. 122, aff'd 82 *id.,* 364; *Danenhower* v. *Birch,* 97 N. J. L. 193).

But *in the case of a foreign corporation the court of chancery will not take jurisdiction of a suit in the nature of an equitable accounting,* either for the preliminary purpose of determining and levying an assessment on stock or for the two-fold pur-

pose of levying the assessment and enforcing it. Such proceedings, it has been held by the courts of this State, are more appropriately brought in the tribunal having jurisdiction to administer the insolvent estate of the corporation (*McDermott* v. *Woodhouse,* 87 N. J. Eq. 615; *Chicago Title & Trust Co.* v. *Young,* 90 *id.* 27). It is to be noted that in the case last cited P. L. 1897, c. 50 was specifically called to the attention of Vice-Chancellor Stevenson (90 N. J. Eq., at p. 32). Both of the cases were begun after the enactment of P. L. 1897, c. 50, and the opinions in both cases assume that after the assessment has been levied by the foreign tribunal the action to enforce the assessment in New Jersey must be at law unless some element of equity jurisdiction appears which was not present in either of the cases cited. In *McDermott* v. *Woodhouse, supra,* Mr. Justice Swayze, after holding that the liability of stockholders on "watered" stock of a foreign corporation must be ascertained in the domiciliary forum, said (87 N. J. Eq., at p. 620):

> "When that liability has been ascertained it must be enforced in a *court of law* * * * unless some element of equity jurisdiction appears, not present in this case as far as the bill shows."

And in *Chicago Title & Trust Co.* v. *Young,* Vice-Chancellor Stevenson said (90 N. J. Eq., at p. 35):

> "After the suit for an accounting of the assets and liabilities has been conducted to a finish * * * then for the first time an action can be maintained in a court of competent jurisdiction in New Jersey to enforce the assessment against the executors of the former stockholder, Mr. Young.
>
> "It would seem from the opinion of the court of errors and appeals in *McDermott* v. *Woodhouse, supra* (at p. 620), that such action would be a strictly *legal action over which the court of chancery would have no jurisdiction.*"

These expressions of opinion on the part of this Court, and of Vice-Chancellor Stevenson, on the very point here at issue are brushed aside by the defendants as *obiter,* and they go on to say (Defts.' Brief, p. 22) :

> "the only decision is the one in *Johnson* v. *Tennessee Oil Co.,* where the court held that the statute does apply."

Unfortunately for their argument, the remarks of Vice-Chancellor Emery, in the case relied on by them, were equally *obiter.* In that case a judgment creditor of an Arizona corporation filed a bill on his own behalf and that of all other creditors, in the court of chancery, against the corporation and all of its stockholders and directors, seeking to enforce liability of the stockholders on stock alleged to be "watered". The Vice-Chancellor, after considering the provisions of the Arizona statute and noting that no decisions of the Arizona courts holding stockholders for "watered" stock had been cited to him, came to the conclusion that there was no liability under the statute, nor was there any liability under the "trust fund doctrine", because the complainant, who appeared to be the only creditor, was a subsequent creditor with full notice of the fraudulent overvaluation of the property received for the stock. It appeared that the complainant had been the counsel and legal adviser of the company at the time it issued the stock and had actually advised as to the fraudulent character of the issue. His participation in various proceedings of the corporation were considered by the Vice-Chancellor to estop him from contending that his debt was incurred in reliance upon the liability of the stockholders for overvaluation. On this branch of the case the Vice-Chancellor made the following decision (74 N. J. Eq. at p. 40) :

> "Complainant's claim, therefore, cannot be sustained on the ground either of liability

> under the statute for unpaid instalments or on general principles of equity arising out of the fraudulent overvaluation of the property received for stock."

The Vice-Chancellor had no occasion to pass upon, and did not pass upon, the question whether if a proceeding for the ascertainment and levying of an assessment on the stock had been previously brought to a conclusion in an Arizona court or in any other foreign tribunal having jurisdiction over the administration of the insolvent estate of the Arizona company, the decree of assessment could or could not have been sued on in an action at law in New Jersey.

It is to be noted that the situation before Vice-Chancellor Emery in *Johnson* v. *Tennessee Oil Co.* was a peculiar one in that the complainant appeared to be the only creditor. Insofar as Vice-Chancellor Emery's remarks here relied on by the defendants implied that a suit in equity for an accounting would lie in New Jersey to procure an assessment on "watered" stock of a foreign corporation having numerous creditors and stockholders, those remarks must be deemed to be overruled by the decision of this court in *McDermott* v. *Woodhouse, supra.*

The defendants must concede, therefore, on the authority of *McDermott* v. *Woodhouse,* that a suit in the nature of an equitable accounting for the ascertainment or levying of an assessment on the capital stock of Maxim Corporation would not be entertained by the court of chancery of New Jersey.

The defendants appear to seek to escape the force of this reasoning by suggesting that what P. L. 1897, c. 50 requires is the bringing in the court of chancery not of a suit for assessment, but of a plenary suit for enforcement. For example, they say, at page 20 of their brief:

> "There is nothing which would have prevented the trustee in the instant case from

> filing a bill in equity as required by the statute. We have here a suit by the trustee who is all that is left of the corporation. It is settled that in such a suit he represents the corporation and the stockholders."

And at page 25:

> "No relief or binding judgment or decree is sought against these stockholders. They can come in if they like. The same is true of the other creditors."

And at page 27:

> "The New Jersey statute relates merely to the form of this plenary suit and not to the assessment or the proceedings leading up to the assessment in the bankrutpcy court. An act which prescribes the court in which the action to enforce the assessment must be brought and the procedure relating thereto, does not deny full faith and credit to the assessment which is sought to be enforced. So far as the proceedings of the bankruptcy court are concerned, they are unaffected by the New Jersey statute."

And at page 29:

> "The plenary action to enforce the assessment not being the bankruptcy proceeding and over which the bankruptcy court has no jurisdiction, the statute of New Jersey, relating only to this plenary suit and not to the bankruptcy proceedings leading up to the assessment, does not conflict with the Bankruptcy Act or with the constitutional provision empowering Congress to establish uniform laws on that subject."

It appears, then, that what the defendants are suggesting here is that the plaintiff, as trustee in bankruptcy, should have brought a suit in equity against Mr. Fleissner to enforce the decree of the bankruptcy court (it being assumed for purposes

of argument under this point that Mr. Fleissner had been properly made a party to the assessment proceeding in the bankruptcy court). They say that in such a suit in equity any other stockholders, or any creditors, could have come in if they liked, but it was not necessary to make all of them parties as the trustee in bankruptcy sufficiently represented them.

We confess that we do not understand the defendants' suggestion. If the assessment of the bankruptcy court were to be given full faith and credit in such a suit in equity, then there would be no need of duplicating the equitable accounting and assessment in the suit in equity. If the suit in equity were for the sole purpose of enforcing the assessment made by the bankruptcy court against Mr. Fleissner, individually, no other stockholders and no creditors would be entitled to litigate any issue in such a suit.

Such a plenary suit for the enforcement of an assessment which has already been levied in a foreign tribunal presents no ground of equitable jurisdiction in the New Jersey court of chancery. In the case of "statutory" liability of stockholders it has been held by this court that the right of enforcement is purely legal in character and that even where a number of creditors are seeking to enforce the liability of a number of stockholders the court of chancery is without jurisdiction.

Miller v. *Willett,* 71 N. J. Eq. 741.

The same result would have to be reached as to the enforcement of a liability for "watered" stock after the assessment has been determined and levied and thus the only possible ground for equitable jurisdiction, having already been availed of in the foreign tribunal, is no longer present when the facts are presented to the courts of this state.

If the defendants should attempt to urge that P. L. 1897, c. 50 confers on the court of chancery jurisdiction of a suit for the mere enforcement of an assessment already fixed in amount by the foreign tribunal, the answer would be that the act, if so construed, would be unconstitutional as attempting to give to the court of chancery authority to hear and determine an action purely legal in nature (*Gross* v. *Penna. Mortgage etc. Co.,* not officially reported, 7 N. J. Adv. R. 710).

The suggestion of the defendants, however, that the act merely requires an equitable suit for enforcement of the assessment levied by the foreign tribunal and not a duplication of the proceeding already had in the foreign tribunal, is at variance with the language of the act. The action or proceeding must, according to that language, be in the "nature of an equitable accounting". Those words can have reference only to a proceeding for the purpose of ascertaining and levying the assessment.

It has been shown, then, that if the act were to be construed to apply to stockholder's liability for "watered" stock, it would require as against a New Jersey stockholder of a foreign corporation a suit in equity for the twofold purpose of levying an assessment and enforcing it, but that such a suit will not lie for either of those purposes, because the court of chancery will not assess the stock of a foreign corporation, and there is no ground of equitable jurisdiction for the enforcement of the assessment of a foreign tribunal. The construction leading to this unreasonable result should, therefore, not be adopted.

(5) *P. L. 1897, c. 50, if construed to apply to stockholders' liability for "watered" stock, would be unconstitutional as conflicting with the uniform administration of the Bankruptcy Act enacted by Congress pursuant to Article I, Section 8 of the Federal Constitution.*

The Constitution of the United States conferred upon the Congress the power

> "to establish * * * uniform laws on the subject of bankruptcies throughout the United States" (Art. I, Sec. 8).

In the exercise of such power the Bankruptcy Act of 1898 was enacted and became effective on July 1, 1898 (30 Stat. L., c. 541, p. 566). This was subsequent to the enactment of the New Jersey statute here in question, which became effective March 30, 1897 (P. L. 1897, c. 50, Sec. 3).

As pointed out in *McDermott* v. *Woodhouse, supra,* and *Chicago Title & Trust Co.* v. *Young, supra,* an assessment on "watered" stock is most conveniently and efficaciously levied by the tribunal having primary jurisdiction to administer the assets of the insolvent corporation. Where the right to enforce stockholders' liability is included in the assets of the insolvent estate and that estate is being administered in bankruptcy, the preliminary proceeding for an assessment is properly had in the bankruptcy court (*Wallace* v. *Weinstein,* 257 Fed. 255). The decree of the bankruptcy court levying the assessment can then be taken by the trustee as the basis of plenary actions to be brought by him against the various persons assessed (*Clevenger* v. *Moore,* 71 N. J. L. 148; *Danenhower* v. *Birch,* 97 N. J. L. 193). The jurisdiction of the bankruptcy court over the assessment proceeding is exclusive of the state courts (*DeMuth* v. *Faw,* 103 Wash. 279; 174 Pac. 18).

This mode of procedure is in the interest of the prompt administration of bankrupt estates. Were the trustee in bankruptcy compelled to bring suits in the nature of equitable accountings in each of the jurisdictions where the persons liable reside, making in each of those suits all of the stockholders and creditors parties and relitigating in each of them precisely the same issues of fact and law with perhaps varying results, the administration of the bankrupt estate would be subjected to delays, confusion and expense. Yet this is the result to which the construction of P. L. 1897, c. 50, contended for by the defendants would lead. If the legislature of New Jersey may validly prohibit a trustee in bankruptcy of a foreign corporation from bringing an action at law in New Jersey to enforce an assessment levied by the bankruptcy court and may validly require such trustee, if he sues at all, to bring suit in equity duplicating the assessment proceeding already had, then the other states may validly enact similar legislation.

Such interference with the prompt and nationally uniform administration of the assets of bankrupt corporations is repugnant to the federal constitution.

> "The bankruptcy law is paramount, and the jurisdiction of the Federal courts in bankruptcy, when properly invoked, in the administration of the affairs of insolvent persons and corporations, is essentially exclusive."
>
> *In re Watts,* 190 U. S. 1, 27.

> "The power given to congress over this subject is plenary, and when it has been exercised, all state legislation, and all proceedings in state courts, which actually comes in conflict with it, must yield to the paramount authority of the general government * * *."
>
> *Steelman* v. *Mattix,* 36 N. J. L. 344.

> "The bankruptcy laws of congress enacted pursuant to the powers delegated to it by the federal constitution are binding upon the state as well as the federal courts; the state courts are bound to respect the rights acquired under them, and it is not to be believed that any of our state courts will attempt to override or nullify any of such laws."
>
> *Hall* v. *Chicago etc. R. Co.,* 88 Neb. 20, 26.

> "By this law (Bankruptcy Act of 1898) Congress has superimposed upon the forty-eight widely varying systems of commercial law of the different states, one vast, uniform system of jurisprudence governing the dealings of men with one another in every part of the country, * * *."
>
> 1 *Remington on Bankruptcy,* 3d ed. p. 19.

If a state law is construed so as to conflict with the uniform administration of the Bankruptcy Act, the operation of such state law, to the extent of such conflict, must be held to be suspended.

> "The Federal Constitution, Art. 1, § 8, gives Congress the power to establish uniform laws on the subject of bankruptcy throughout the United States. In view of this grant of authority to the Congress, it has been settled from an early date that state laws to the extent that they conflict with the laws of Congress, enacted under its constitutional authority, on the subject of bankruptcy are suspended. While this is true, state laws are thus suspended only to the extent of actual conflict with the system provided by the Bankruptcy Act of Congress."
>
> *Stellwagen* v. *Clum,* 245 U. S. 605, 613.

In the present case it appears that the bankruptcy court undertook the administration of the assets of the Delaware corporation. All persons concerned, as existing or former stockholders,

were given due notice and an opportunity to be heard on the issues of fact and law common to all of them affecting their liability as stockholders for the debts of the corporation, reserving to them all individual defenses personal to themselves (R. 18, l. 21)*. If the New Jersey statute were to be construed to require in the court of chancery a duplication of the equitable accounting which has already been had in the bankruptcy court, one of the primary purposes of the Bankruptcy Act would be defeated, namely, to place in the hands of a single tribunal, the bankruptcy court of original jurisdiction, the full administration of the bankrupt's assets (*State of Missouri* v. *Angle,* 235 Fed. 644).

(6) *P. L. 1897, c. 50 if construed to prohibit the action at bar would deny full faith and credit to the decree of the bankruptcy court.*

As has been shown, the New Jersey court of chancery will not take jurisdiction of a suit in the nature of an equitable accounting to determine and levy an assessment on the stock of a foreign corporation, nor of a plenary suit to enforce stockholders' liability not presenting any ground of equitable jurisdiction. If, then, P. L. 1897, c. 50 were held to prohibit an action at law to enforce an assessment on "watered" stock levied by a court of the United States, the effect of such holding would be to deny full faith and credit to the decree which fixed and levied the assessment. But the decree of a state court levying an assessment based on the "statutory" liability of stockholders is entitled to full faith and credit in the courts of a sister state, despite the policy of the forum forbidding the entertainment of an action to enforce such assessment

* References in this brief to the State of Case are indicated by the letter R.

(*Converse* v. *Hamilton,* 224 U. S. 243). And a statute of the forum forbidding the entertainment of such an action is unconstitutional (*Cox* v. *Henson,* —— Wis. ——, 228 N. W. 510). The principle of the cases cited requires the New Jersey courts to entertain an action to enforce an assessment levied by the court of chancery of Delaware on the "watered" stock of a Delaware corporation. No less faith and credit must be accorded by the New Jersey courts to the decree of a court of the United States exercising powers derived from an act of Congress enacted in the exercise of power conferred by the federal constitution.

> "While the judicial proceedings of the federal courts are not within the terms of the constitutional provision [*i. e.* Art. IV, Sec. 1], such proceedings, nevertheless, must be accorded the same full faith and credit by state courts as would be required in respect of the judicial proceedings of another state. *Hancock National Bank* v. *Farnum,* 176 U. S. 640, 644; *Embry* v. *Palmer,* 107 U. S. 3, 9."
>
> *Knights of Pythias* v. *Meyer,* 265 U. S. 30, at p. 33.

> "* * * The power to prescribe what effect shall be given to the judicial proceedings of the courts of the United States is conferred by other provisions of the constitution, such as those which declare the extent of the judicial power of the United States [*i. e.,* Art. III, Sec. 2], which authorize all legislation necessary and proper for executing the powers vested by the constitution in the government of the United States, or in any department or officer thereof [*i. e.,* Art. I, Sec. 8], and which declare the supremacy of the authority of the national government within the limits of the constitution [*i. e.,* Art. VI]. As part of its general authority, the power to give effect to the judgments of its courts is co-extensive with its territorial jurisdiction * * * Accordingly, the

> judgments of the courts of the United States have invariably been recognized as upon the same footing, so far as concerns the obligation created by them, with domestic judgments of the States, wherever rendered or wherever sought to be enforced. * * *
>
> "The rule for determining what effect shall be given to such judgments is that declared by this court, in respect to the faith and credit to be given to the judgments of the State courts in the courts of other states, * * *."

Embry v. *Palmer,* 107 U. S. 3, at p. 9.

Accordingly, it has been shown that P. L. 1897, c. 50 is not applicable to the action at bar, or if applicable is invalid as interfering with the uniform administration of the Bankruptcy Act and as denying full faith and credit to the judgment of a United States court.

The Trial Judge, therefore, committed no error in denying the defendants' motion to strike out the complaint and in striking out the Seventh Separate Defense of the defendants' answer and in overruling the defendants' objection in point of law to the complaint reserved in the defendants' answer.

POINT II.

The transfer of ownership of "watered" stock by a person liable thereon to a person exempt from liability does not relieve the transferor of liability.

The defendants contend that all of Mr. Fleissner's 6,375 shares having been disposed of by him prior to the bankruptcy of the Company, his liability to assessment had terminated. They liken the situation to that of a mortgage on land which persists as a charge on the land but is not assumed by the purchaser. Upon a re-sale of the land the charge passes with it and no liability remains in the first transferee.

The analogy suggested by the defendants is not apt, for (1) the purchaser of land subject to a mortgage assumes no personal liability and (2) the land remains subject to the mortgage in the hands of subsequent transferees; whereas in the case at bar (1) Mr. Fleissner did assume personal liability and, as will be shown, (2) the shares were not subject to assessment in the hands of the subsequent owners.

The record is devoid of any proof that the persons who acquired Mr. Fleissner's shares were amenable to assessment. In fact, the only possible inference from the evidence is to the contrary. The bankruptcy court had before it all of the facts and circumstances relating to the history of these shares and if they could have been assessed in the hands of holders subsequent to Mr. Fleissner it must be presumed that the bankruptcy court would have levied such an assessment. If the facts were not fully disclosed by the trustee to the bankruptcy court, Mr. Fleissner was at liberty to make such

disclosure himself and seek to avoid assessment on that ground; or if it is argued that he was not obliged to go into the bankruptcy court, but could reserve this ground of defense for the plenary suit to be brought against him, then he or his executors should have proved in this action that his shares had passed into the hands of persons amenable to assessment. The defendants did not do so as, indeed, they could not, for the facts were otherwise. *The transfer by Mr. Fleissner of ownership of the 6,375 shares was to persons not amenable to assessment.* The defendants admit (Brief, pp. 4; 39) that the 957 shares remaining at the termination of the syndicate and distributed to Mr. Fleissner, were sold *on the market.* All of the stock of the syndicate which was donated to the Company or sold and the proceeds loaned to the Company, was sold *on the market* (R. 180, l. 22).

Shares sold *on the market* are presumably transferred to innocent purchasers for value (*Steacey* v. *Little Rock, etc. R. Co.,* 5 Dill. 348, Fed. Cas. No. 13329). Under the law of Delaware an innocent purchaser for value of "watered" stock is exempt from liability to pay any part of the par value thereof (*John W. Cooney Co.* v. *Arlington Hotel Co., supra*).

The question, then, is whether the transfer of "watered" stock of a Delaware corporation by a person liable to pay the par value thereof to a person who is not liable to pay the par value thereof relieves the transferor of liability. The very form of the question suggests the answer. That the transferor is not relieved of liability is the correct rule on principle and on authority.

On principle, there is no justification in depriving the creditors of recourse against the transferor when they have no recourse against the transferee. Were not this the correct rule, takers of "watered"

stock with notice of the fact that it was not fully paid would rarely be held liable for the debts of the corporation, for a sale of the stock on the open market would relieve them.

The defendants rely on cases where it was decided that a transfer of part-paid stock or of stock carrying "statutory" liability relieved the transferor, but the situation as to either of such classes of stock is fundamentally different from that in regard to "watered" stock. Part-paid stock is issued pursuant to a contract between the corporation and the taker to the effect that the corporation may assess and the taker will pay the balance due on the stock. When such stock is transferred on the books of the corporation and a new certificate issued, it may well be said that the corporation has accepted the new stockholder in lieu of the old, in other words, that as to the obligation to pay the balance of the par value a novation has occurred. Likewise in the case of stock to which " statutory" liability attaches, it may well be said (in the absence of express provisions in the statute to the contrary) that the transferee having by the acceptance of the transfer assumed the "statutory" liability the transferor under the provisions of the statute is no longer liable.

But when "watered" stock is issued there is an agreement between the corporation and the taker that the stock will not be assessed and that so far as the corporation is concerned it is fully paid. In no sense, therefore, could the assent of the corporation to a transfer of "watered" stock be held to be an acceptance by the corporation of the transferee as the person liable in respect of the stock. So far as the corporation is concerned, no one is liable on the stock. It is only after the original contract with the corporation has been set aside in a proceeding for that purpose that the stock may be assessed. When the transferee incurs no liability

in respect to the stock, there cannot be said to be a novation.

If the transferor were to be relieved of liability, the liability would be lost altogether, except for the liability of the original takers. (In the present case the financial condition of the original takers was found by the bankruptcy court to be such that only a limited sum was assessed against them [R. 12, l. 28 *et seq.*] and the transferees from the original takers were assessed for the remaining amount required [R. 14, l. 35 *et seq.*].) Certainly such annihilation of the assets available for creditors should not be permitted unless required by express terms of some statutory provision. The defendants purport to find authority for such annihilation in the language of the Delaware statute providing that each stockholder shall be bound to pay on *each share held by him* (*Code of 1915,* Sec. 1934, c. 20). But as already shown, the language of this provision is practically identical with that of the Corporation Act of New Jersey. The same words "each share held by him" appear in Section 21 of the Revision of 1896 (Comp. Stat., p. 1610). Nevertheless transferors of "watered" stock of a New Jersey corporation are liable to assessment after they have parted with their stock.

In *Wolcott* v. *Waldstein,* 86 N. J. Eq. 63, Vice-Chancellor Leaming sustained a bill by a receiver in insolvency of a New Jersey corporation to levy and enforce an assessment on stock for the payment of creditors. The stock had been issued for property at a valuation which the Vice-Chancellor held to be intentionally excessive or based on an unlawful capitalization of future profits. Two of the defendants had purchased their stock from the original issuee. The Vice-Chancellor found (at p. 66) that these two defendants were liable "for the unpaid part of the stock acquired by them, *notwith-*

standing the fact that they may have since parted with part or all of it."

The defendants attempt to distinguish *Wolcott* v. *Waldstein* on the ground that the two transferees held liable had participated in the transaction pursuant to which the stock was originally issued. It is true that they were members of the board of directors which authorized the issue of the stock. But the basis of liability of transferees with notice of "watered" stock is the same whether such transferees actually participated in the original transaction, or became accessories to it as a matter of law. In neither case is there an assumption of liability *to the corporation* which can be said to be released when the corporation assents to the transfer of the stock. The notice which makes the transferee liable charges him with the original "fraud" as effectually as if he had participated in the original transaction.

> "In the case of partially paid shares issued as such, the stockholder, when he accepts his shares and enters upon the relation of stockholder, does so, as we have said, upon the condition that his shares are subject to call for the unpaid balance upon them, and that he, as their owner, will respond to such call. * * * It makes no difference, therefore, in such a case, whether any particular stockholder against whom a recovery is sought was a party to the original transaction whereby the stock was issued, or is only a transferee of some such party. He is liable simply as the owner of the stock, and because of the relationship with the corporation which he voluntarily assumed when he accepted such ownership.
>
> Such, however, is not the situation of the stockholder owning shares ostensibly fully paid, but not so in fact. * * * he cannot be held liable unless he was either a party to the transaction in the first instance, *or has in effect in some manner made himself a party since."*
>
> *Rhode* v. *Dock Hop Co.,* 188 Cal. 367, at p. 378; 194 Pac. 11, at p. 16.

So here Mr. Fleissner made himself a party to the original transaction by accepting the stock under circumstances charging him with notice that the stock was not fully paid. So far as creditors were concerned he put himself in the position of an "original subscriber" (*Allenhurst Park Estates* v. *Smith,* 101 N. J. Eq. 581, at p. 607).

It has also been held in New York that a transfer of "watered" stock to a person not amenable to assessment thereon does not relieve the transferor (*Palmer* v. *Scheftel,* 194 App. Div. 682, 687; affd. 236 N. Y. 9 mem.). This is the general rule.

> "Where stock has been issued for property or contract work fraudulently overvalued, the person so receiving the stock may be liable thereon, even though he has transferred it to others."
>
> 1 *Cook on Corps.,* 8th ed., p. 851.

It thus appears that the *bona fides* of the transfer by Mr. Fleissner is of no materiality. The *bona fides* of the transferor would only be material if he were passing the liability on to the transferee. Having failed to show that any of the 6,375 shares were acquired by persons amenable to assessment the defendants have failed to bring themselves within the principles and authorities which permit a holder of part-paid stock, or of stock carrying "statutory" liability, to relieve himself of liability by transfer to a person *who assumes liability in his place.*

The Trial Judge, therefore, committed no error in refusing to charge the jury as requested in the defendants' 7th, 8th and 19th requests.

In their 10th and 11th requests (R. 277) the defendants sought a ruling that Mr. Fleissner was not liable on "shares which he sold for the benefit of the company and the proceeds of which he loaned to the company". This referred to the 2,231 shares which were sold for account of Mr. Fleissner in July and November, 1917, and for which he received

notes of the corporation aggregating $3,590.64 (R. 420). The Company received no additional consideration on account of these shares, for every dollar paid into the treasury as a result of the sale of these shares was offset by a corresponding obligation of the corporation evidenced by its notes delivered to Mr. Fleissner (Ex. P. 47). Mr. Fleissner received interest on these notes (R. 160), collected or sold part of them (R. 182, l. 25) and filed his claim in the bankruptcy proceeding for the balance (R. 460). The defendants cite no authority or principle which would permit Mr. Fleissner to be relieved of liability on account of these 2,231 shares. All of the facts with respect to the sale of these shares and the loan of the proceeds to the corporation were before the bankruptcy court, the bankruptcy court correctly assessed the shares and the Trial Judge in this action correctly refused to charge the jury that these shares were to be deducted from the assessment.

By their 14th request (R. 278) the defendants sought a ruling that Mr. Fleissner was not to be held liable on shares "which he purchased from Theodore Palmer but which subsequently he returned to the treasury of the company". There is no proof that any of the 6,375 shares were returned by Mr. Fleissner to the treasury of the Company. The framer of the request probably had in mind the fact that Mr. Fleissner donated approximately one-half of his syndicate holdings, *i. e.,* 3,187 shares, to Messrs. Davis and Durkin (R. 189), and that out of the amount so donated by Mr. Fleissner and other members of the syndicate, amounting in all to 255,000 shares, Messrs. Davis and Durkin donated 100,000 shares to the treasury of the Company (R. 190, l. 16). To the extent, therefore, that Mr. Fleissner's contribution of 3,187 shares was represented in the 100,000 shares donated to the treasury by Messrs. Davis and Durkin, the

treasury did receive an additional consideration in respect to Mr. Fleissner's shares. *But in fixing the assessment the bankruptcy court took all of these facts into consideration and made the appropriate credits.* The decree of assessment found (R. 14, l. 35):

> "16. That *after allowing all sums properly to be credited* on said 510,000 shares by reason of payments into the treasury of the bankrupt arising from the sale of said shares or part thereof, there still remains unpaid on said shares an aggregate sum * * * in excess of the amount required to be provided for by assessment as aforesaid;".

The assessment levied by the bankruptcy court against Mr. Fleissner was the net amount determined to be due from him after all of the credits had been given which appeared to be due from the proof introduced in the bankruptcy court. Mr. Fleissner's executors, therefore, are not entitled in this action to ask for additional credits or to be relieved from assessment on account of the donation to the treasury of the 100,000 shares. The adjustment of credits as among the various shares was a matter particularly within the province of the court making the assessment. But, in any event, it is obvious that the credit of the proceeds of sale of these donated shares, which amounted to only about $1.80 per share (R. 154, l. 34), would still leave the shares assessable, since the par value was $10 and the syndicate originally contributed less than 40 cents per share (R. 91, l. 20). The refusal of the Court to charge the defendants' 14th request, therefore, was correct.

Accordingly, as there was no proof in the case which would have justified the jury in reducing the assessment which had been levied by the bankruptcy court by reason of any change in the number of shares to be assessed, there was no occasion to

charge that the order of the bankruptcy court was not binding as to the number of shares for which the defendant could be assessed. There being no question in the case as to the number of shares, the defendants were not prejudiced by the refusal of the court to charge as requested in the defendants' 17th request (R. 278).

POINT III.

Notice of a hearing by the bankruptcy court of a petition for assessment of the "watered" stock of a bankrupt corporation is sufficiently given if mailed to a non-resident who has formerly acquired shares of the stock under circumstances sufficient to charge him with liability thereon and is still subject to such liability.

The tribunal in which the preliminary assessment proceeding is had need not obtain personal jurisdiction over the persons to be assessed, provided they are given reasonable notice and an opportunity to be heard, whether the liability is on stock subscriptions or "watered" stock or is "statutory".

Cumberland Lumber Co. v. *Clinton Hill, etc. Co.,* 57 N. J. Eq. 627;
Gilson v. *Appleby,* 79 *id.* 590;
Apgar v. *Altoona Glass Co.,* 92 *id.* 352, 356;
John W. Cooney Co. v. *Arlington Hotel Co., supra;*
Bernheimer v. *Converse,* 206 U. S. 516;
Converse v. *Hamilton,* 224 *id.* 243.

There can be no constitutional objection to such practice, for the decree of assessment is not given the effect of a personal judgment.

The defendants seek to base the doctrine above mentioned on the fact that the persons assessed are stockholders of record of the corporation *at the time of the assessment proceeding.* It is true that the language of the opinions is susceptible of the construction so suggested. But an examination of the decisions of the United States Supreme Court upon which the doctrine depends insofar as concerns the constitutionality of the practice, discloses that the real basis is not that the persons assessed being members of the corporation *at the time of the assessment proceeding* are sufficiently represented by it in that proceeding, but that the persons assessed subjected themselves *at the time when they became stockholders* to the possibility of being made parties to such an assessment proceeding at some subsequent time.

In *Selig* v. *Hamilton,* 234 U. S. 652, the statutory receiver of a Minnesota corporation brought an action in New York to enforce an assessment which had been levied against the defendant, who was not a resident of Minnesota, in an assessment proceeding in Minnesota. The assessment was based on the "statutory" liability under the Minnesota statute. The defendant was not a stockholder at the time of the assessment proceeding, having transferred his stock over a year and a half before. Notice of the assessment proceeding had been given to the defendant by publication and mail as provided in the Minnesota statute. The Supreme Court held that a judgment of the New York court based on the decree of the Minnesota court was valid. Mr. Justice Hughes said (p. 662):

> "* * * despite the transfer, Selig remained liable for the corporate debt previously incurred. Moreover, it cannot be doubted that the

> authority of the Minnesota court under the statute was not confined to proceedings to assess *existing* stockholders. * * * the constitutional validity of the act in this aspect is as clear as is its validity with respect to the authorization of an assessment against existing stockholders. So far as the jurisdiction of the court to levy the assessment is concerned, no distinction can be maintained. The basis of jurisdiction is the same in each case; it is found in the contractual obligation assumed in becoming a member of a Minnesota corporation and in the consequent *submission to the reasonable regulations of the State for the purpose of making the liability effectual. Bernheimer* v. *Converse, supra.*"

In *Levison* v. *Hamilton,* 204 Fed. 72, the Circuit Court of Appeals for the Second Circuit affirmed a judgment based on a state of facts similar to that involved in *Selig* v. *Hamilton, supra.* The defendant had ceased to be a stockholder about two years prior to the assessment in the Minnesota court. Coxe, *C. J.,* said (at p. 73):

> "We think the law is well settled that when the defendant became a stockholder in the Minnesota corporation, *he submitted himself to the Minnesota law,* as interpreted by the laws of that state, and is bound by their decree holding him liable."

The opinion of the District Court (*Hamilton* v. *Levision,* 198 Fed. 444) was by Judge Learned Hand, who said (at p. 447):

> "* * * the defendant was liable from the time he actually accepted the stock * * * Moreover, he remained liable until at the earliest his name was struck off. * * * The intermediate liability between these two dates did not expire at the end of one year * * * but it endured and was open to assessment when the corporation became insolvent. It could

form the basis of a jurisdiction, not personal, quite as much as though he remained a stockholder at the time of the insolvency."

When the case of *Selig* v. *Hamilton, supra,* was in the District Court, Judge Learned Hand said (195 Fed. 153, at p. 155):

> "* * * Since *Bernheimer* v. *Converse,* 206 U. S. 516 * * * it must be accepted that for one who is a stockholder at the time of the dissolution all decrees in the parent suit are conclusive upon all matters relating to the amount of, the propriety of, and the necessity for, the said assessment. * * * *The question in the case at bar is whether the statute has the same effect against one who has ceased to be a stockholder.* Section 2864 of the Revised Laws of 1905 [of Minnesota] prescribes that the transfer of stock shall not exempt the stockholder from liability upon all the indebtedness existing at the time of the transfer. As to those, therefore, his relation to the corporation remains just as it did before the transfer. * * *
>
> Moreover Section 2864 was, in substance, in existence when Selig took his stock. Therefore *he took it subject to a continuance of his liability after a transfer, and it begs the question to say that he had severed his connection with the corporation in 1904.* The statute says quoad then existing indebtedness he did not. This being so, he was as much and as little subject to the estoppel of a judgment as a stockholder who remained such. The measure of his liability was different, but that is only a guide to the court which makes the assessment, and cannot be thought to limit its power to determine the amount. *Otherwise, the whole assessment would be tentative as against a past stockholder, which cannot be the law,* though the defendant seems to urge it in his brief. The theory of the estoppel of the judgment against the corporation upon the stockholder depends wholly upon his voluntary association of him-

> self with the incorporators by the act of taking stock. Whatever be the contract which he makes at that time, it is held to make him privy to a determination of the corporate assets, the deficiency, and the propriety of an assessment against him."

The holding of the United States Supreme Court in *Selig* v. *Hamilton, supra,* was foreshadowed in *Bernheimer* v. *Converse, supra,* where the decree of the Minnesota court levying an assessment based upon the "statutory" liability was held enforceable against a non-resident stockholder who had not appeared in the Minnesota proceedings or been personally served within the territorial jurisdiction of the court. The decision was based on earlier decisions holding that an assessment might be levied on unpaid stock subscriptions for the benefit of the creditors without the presence or personal service of stockholders (*Hawkins* v. *Glenn,* 131 U. S. 319; *Great Western Tel. Co.* v. *Purdy,* 162 *id.* 329, 336). Mr. Justice Day said (206 U. S. at p. 532):

> "Nor can we see any substantial difference in this respect between a liability to be ascertained for the benefit of creditors upon a stock subscription and the liability for the same purpose which is entailed by becoming a member of a corporation through the purchase of stock whereby a contract is implied in favor of creditors * * *
>
> "By becoming a member of a Minnesota corporation and assuming the liability attaching to such members, he became *subject to such regulations as the State might lawfully make to render the liability effectual.*"

The same principle was foreshadowed in *Hawkins* v. *Glenn, supra,* where part-paid stock had been assessed in a creditors' suit to which the stockholders individually were not parties. Mr. Chief Justice Fuller said (131 U. S. at p. 332):

> "We think it cannot be doubted that a decree against a corporation in respect to corporate

> matters, such as the making of an assessment in the discharge of a duty resting on the corporation, necessarily binds its members in the absence of fraud, and that this is involved in the contract made in becoming a stockholder."

It is to be noted that the emphasis in the lanquage last quoted is on the assumption by the stockholder at the time he becomes such of the possibility that he will be subject to a particular method of procedure at some later date. It is to be noted, incidentally, that in *Hawkins* v. *Glenn, supra,* part of the defendants' shares had been transferred out of his name, but no error was assigned as to those shares.

It is established, therefore, that the real basis of the doctrine of corporate representation of nonresident stockholders in a proceeding for the assessment of stockholders is the subjection to the possibility of such procedure which is involved in their becoming stockholders. So long as they remain liable with regard to the stock, whether or not they part with the stock, they remain subject to the possibility of the procedure. While the cases cited relate to "statutory" liability, the principle, so far as the constitutionality of the procedure is concerned, is the same in regard to "watered" stock. The taker with notice of "watered" stock of a Delaware corporation by assuming the liability attaching to such stock becomes subject to the procedure which has been adopted by the courts of Delaware, and by the courts of the United States in administering the estates of bankrupt Delaware corporations, to render such liability effectual, *i. e.,* a procedure in which jurisdiction sufficient to sustain a personal judgment against the persons to be assessed is not requisite in the preliminary assessment proceeding. If such taker with notice of "watered" stock subsequently disposes of the stock

to persons not amenable to assessment and, as has been shown above, liability remains in him, he also remains still subject to the procedure which is necessary for effectuating that liability. He cannot, therefore, insist when the time for assessing the stock arrives that personal service of process must be made on him within the territorial jurisdiction of the court in order that the stock may be validly assessed, while as to existing stockholders notice by mail or publication is sufficient. Not having relieved himself of liability on the stock he is still subject to being represented by the corporation in the assessment proceeding.

Mr. Fleissner having by the acquisition of the 6,375 shares subjected himself to the possibility that those shares would be assessed in a proceeding to which he might be made a party by mailing or publication of notice, and not having relieved himself of liability on those shares, still remained subject to the procedure which was the proper one for the effectuation of such liability. Such procedure as to him was due process.

It is to be borne in mind that the actual carrying of the names on the books of the corporation as record holders is not essential for the application of the principle of corporate representation. For example, in the *Arlington Hotel Co.* case, where it appeared that notice to non-resident respondents was given by mail, some of the respondents were the holders of voting trust certificates for stock which stood in the names of voting trustees (*John W. Cooney Co.* v. *Arlington Hotel Co.,* 11 Del. Ch. 286, 308; 101 Atl. 879, 889). So here, on the principle of the *Arlington Hotel Co.* case, Mr. Fleissner was correctly assessed in regard to 6,375 shares, although of those shares only 957 were actually transferred on the books of the corporation into his name.

Moreover, Mr. Fleissner had filed his claim in the bankruptcy proceeding (R. 460) and was, therefore, present in the bankruptcy court. Having thus made himself a party he was entitled only to notice of the character provided for by the Bankruptcy Act or usually given in cases not specifically provided for by the statute. The giving of notice to creditors of steps in the administration of a bankrupt estate is due process although such notice is given only by mail or by publication (*Hanover National Bank* v. *Moyses,* 186 U. S. 181, 192). The assessment of stock being one of the proper and usual steps in the administration of the bankrupt estate of a corporation, the persons to be assessed are entitled only to such form of notice as is usually given. Certainly a person who has made himself a party to a bankruptcy proceeding is not entitled to complain that he has not been personally served with notice of one of the subsequent administrative steps in that proceeding.

The situation is analogous to such a step in the bankruptcy proceedings as the sale of property free of liens. Notice of such a sale must be given to lienholders but

> "It need not be in conformity with the summons or subpoena of plenary actions, unless required to be so by rule of court. Even notice by mail undoubtedly would be sufficient, on default, to cut off rights if the notice actually was received * * * 'An order to show cause' why a certain act should not be done or a certain course pursued, is the regular and approved method of giving notice of contemplated action to parties to proceedings in bankruptcy, * * *"
>
> 6 *Remington on Bankruptcy,* 3d ed. §§ 2595-2596.

It appears that an order to show cause, giving about six weeks notice of the hearing on the peti-

tion for assessment, was mailed to the stockholders and former stockholders, including Mr. Fleissner, in the present case (Exh. P. 54; R. 197, l. 24; 197, l. 23 *et seq.*).

The defendants themselves concede (Brief, p. 19) that the assessment proceeding in the bankruptcy court is purely administrative and that there is no jurisdiction in the bankruptcy court to enter a judgment *in personam*. Here the assessment decree expressly reserved to the persons assessed the privilege of setting up defenses personal to themselves in the plenary suits subsequently to be brought against them (R. 18, l. 21). As the assessment proceeding did not seek a personal judgment against Mr. Fleissner there was no requirement that he be personally served with process within the territorial jurisdiction of the bankruptcy court; the enforcement of the assessment decree against him or his executors is not a violation of any of the provisions of the federal or New Jersey constitution.

The defendants seek to make some point of the fact that in the assessment proceeding here it was necessary for the bankruptcy court to set aside the contract between the corporation and the original takers of the stock and that therefore the owners or former owners of the stock were entitled to a greater degree of formality in being made parties to the assessment proceeding. We cannot accede to any such distinction. Every case of an assessment on "watered" stock involves the setting aside of the original contract between the corporation and the issuees of the stock. The fact that the bankruptcy court assesses "watered" stock does not change the character of the assessment proceeding from an administrative proceeding to a plenary suit. If the twofold procedure already adverted to is to be of any efficacy in enforcing the liability for "watered" stock, it is essential that non-resident respondents be held

sufficiently notified by mail or publication so far as concerns the preliminary assessment proceeding, otherwise where such respondents reside in various jurisdictions a single proceeding to determine and levy the assessment would be impracticable.

We do not understand that the defendants seek to deny in this Court that if it be held that Mr. Fleissner was properly made a party to the assessment proceeding his executors are bound by the finding of the bankruptcy court to the effect that the 999,965 shares when originally issued were not fully paid. We note that the defendants are not pressing their 13th ground of appeal (R. 42) which raised this point. However, it is established that where the shares of all of the persons to be assessed were originally issued pursuant to a single transaction, so that the question whether the shares were fully paid affects those persons *as a class,* such question may conclusively be determined in the preliminary assessment proceeding.

The practical necessity of such a rule is apparent, for to permit the several triers of fact in the various plenary actions to arrive at different conclusions on the same issue as against different defendants would lead to an unjust apportionment of the burden which in principle is to be borne ratably in proportion to the holdings of stock.

The position of the Delaware court on this point is indicated by the remarks of the Chancellor in *John W. Cooney Co.* v. *Arlington Hotel Co., supra,* where he said (at 11 Del. Ch. 305; 101 Atl. 887):

> "Inasmuch as there is a question *common to all holders* of shares of common stock * * * that question should be determined in this present proceeding. The question is, was the total issue of common stock rightly issued as fully paid and non-assessable stock so as to exempt all of it, however held, from assessment for creditors?"

The United States Circuit Court of Appeals for the Third Circuit, in a case arising under the New Jersey statute (*In re Canister Co.,* 252 Fed. 70), declined to affirm the action of a referee in bankruptcy who had followed a contrary holding in the Second Circuit (*Enright* v. *Heckscher,* 240 Fed. 863), and preferred to follow an earlier decision in that Circuit (*In re Remington Automobile & Motor Company,* 153 Fed. 345), where Judge Lacombe said (at p. 347):

> "* * * in a plenary action against a stockholder to enforce assessment, he cannot be heard to question the findings made in this proceeding as to the amount paid for the stock * * *."

Likewise, the Court of Appeals of New York, in a plenary action based on the same assessment as was considered by Judge Lacombe, indicated its approval of the principle here contended for, saying:

> "To enable the plaintiff to enforce the liability of delinquent shareholders to the extent only which the deficiency in the corporate assets required and to effect parity of contribution between them, it was necessary that an account of the assets and debts, of the *entire amount of capital remaining unpaid upon* the issued shares, and *the part of the face value of his shares unpaid by such stockholder,* should be taken and the aggregate assessment required equitably reached by the court, and *it is upon those issues* that this order is beyond attack in this action."
>
> *Southworth* v. *Morgan,* 205 N. Y. 293, 296.

The principle has been succinctly stated by a Pennsylvania court as follows:

> "* * * there still remains to the individual stockholder when sued in the courts of his domicile * * * the right to make any de-

> fense personal to himself that is to say, *a defense which cannot be made by the entire body of stockholders as a class, with whom alone the court was dealing,* but by him as an individual, such as minority, lunacy, payment or any other defense arising out of the particular circumstances incident to *his personal acquisition of the stock.*"
>
> *French* v. *Harding,* 46 Pa. Super. Ct., 363, at page 369.

Mr. Fleissner, therefore, having properly been made a party to the assessment proceeding, was bound by the decree of the bankruptcy court on all issues which were common to the body of stockholders or former stockholders with whom that court was dealing, and his executors were entitled to set up only defenses arising out of the particular circumstances incident to his personal acquisition of the stock. The only one of such defenses which was pressed at the trial below was the one which was submitted to the jury. The rule was correctly charged by the Trial Judge as quoted in the appellants' 19th ground of appeal (R. 44). (The portion of the charge quoted in the 20th ground of appeal [R. 44] was later withdrawn by the Court [R. 268, l. 20 *et seq.*]).

POINT IV.

The plaintiff made out a sufficient case to go to the jury on the question whether the defendants' testator acquired 6,375 shares of stock of the Delaware corporation under such circumstances as to charge him with notice of the fact that the shares were not fully paid.

This was the only question of fact submitted to the jury (R. 269, l. 2).

There was no dispute as to the ultimate facts; the defendants rested after their motion for a nonsuit was denied (R. 247, l. 22). The only question for the jury was whether a reasonable inference to be drawn from the facts proved by the plaintiff was that Mr. Fleissner had acquired 6,375 shares of stock of Maxim Munitions Corporation under such circumstances as to charge him with the duty of making reasonable inquiry as to whether such shares were fully paid, and if he had made such inquiry whether he would have learned that the shares were not fully paid.

This question was properly left to the jury. The undisputed evidence had disclosed the existence of facts of the same nature as those which in other cases had been held to constitute constructive notice to transferees of "watered" stock.

Mr. Fleissner became a member of a syndicate which had been formed under a written syndicate agreement (Exh. P-29). His interest in the syndicate, amounting originally to 6,375 shares, was evidenced by a participation certificate issued by the trustee for the syndicate (R. 159, l. 33 *et seq.*). *The participation certificate* (*Exh. P-30*) *specifically re-*

ferred to the syndicate agreement dated February 10, 1916. The participation certificate was issued to Mr. Fleissner upon the surrender to the trustee for the syndicate of a participation certificate for 12,750 shares in the name of Mr. Palmer, endorsed to Mr. Fleissner and another (R. 410). Mr. Fleissner, therefore, by purchasing a one-half interest in Mr. Palmer's participation certificate and receiving, upon the surrender thereof, a new participation certificate for 6,375 shares, had notice of the existence of the syndicate agreement of February 10, 1916, and must be charged with knowledge of all of the provisions of that agreement.

Accordingly, the Trial Judge correctly charged the jury:

> "If you find that Christian Fleissner became a member of the syndicate of February 10, 1916, then he was chargeable with notice of all the facts stated in the recitals of the syndicate agreement of that date, although he did not sign the original syndicate agreement" (R. 259, l. 32 *et seq.*).

The syndicate agreement, with notice of which Mr. Fleissner was thus charged, contained the following provisions (R. 339):

> "WHEREAS, on or about the 24th day of August, 1915, the MAXIM MUNITIONS CORPORATION, was duly organized under the Laws of the State of Delaware, with a capital stock of *Ten Million Dollars ($10,000,000), divided into One Million (1,000,000) shares of the par value of Ten Dollars ($10.) each,* and
>
> * * * * *
>
> WHEREAS, about forty-nine thousand (49,000) shares of said Maxim Munitions Corporation was turned over to J. Robinson Duff, a member of the New York Stock Exchange and placed by him *on the curb market* and dealt in and is *now selling for about Eight Dollars ($8.) per share,* and
>
> * * * * *

WHEREAS, the Maxim Munitions Corporation *is about to sign an order* with the Russian Government for One thousand (1,000) *machine guns,* with an option to the Russian Government to purchase nine thousand (9,000) more, and

WHEREAS, the Greek Government *is negotiating for the purchase* of Five hundred (500) guns, and

WHEREAS, the Italian Government *is likewise negotiating* for two thousand (2,000) guns, and

WHEREAS, these orders, according to the judgment of experts employed by the Maxim Munitions Corporation, are very profitable to it, and

WHEREAS, it is necessary to raise from One hundred thousand to two hundred thousand dollars in order to comfortably arrange for the handling of the aforesaid contracts, and

WHEREAS, said one hundred thousand to two hundred thousand dollars is to be placed in the treasury of the Maxim Munitions Corporation for this purpose and none other, and

* * * * *

WHEREAS, with the exception of five hundred and ten thousand (510,000) shares hereinafter set forth and the stock now escrowed and on the market as above set forth, the balance of said stock shall be escrowed until December 31, 1916, or for a longer period in the judgment of the syndicate.

NOW, THEREFORE, in consideration of the premises, and the sum of One Dollar by each of the parties to the other in hand paid, the receipt whereof is hereby acknowledged, the subscribers hereto agree with one another as follows:

The Subscribers hereby form a Syndicate for the purposes herein expressed, with *a maximum obligation of Two hundred thousand Dollars ($200,000)* for which the Syndicate will receive fifty-one per cent (51%) of the entire

> capital stock of the Maxim Munitions Corporation, or *five hundred and ten thousand (510,000) shares,* which will be escrowed for such a period as in the judgment of the Syndicate is proper, * * *
>
> This agreement shall be in all things binding upon and inure to the benefit of the heirs, executors, administrators, successors *and assigns* of the parties hereto."

So that Mr. Fleissner, when in December, 1916, he acquired one-half of Mr. Palmer's interest in the syndicate, was charged with notice that Mr. Palmer had in February, 1916, acquired his shares, having an aggregate par value of $127,500, for a price which might be not over $2,500, and could not be more than $5,000, or *less than 4/0 cents per share for stock having a par value of $10 per share,* in a company organized in August, 1915; and that all of Mr. Palmer's co-members in the syndicate had acquired their stock at a similar price. The members of the syndicate received what was in effect a bonus stock. They were to pay a minimum of $100,000 or a maximum of $200,000 into the treasury of the Company, and were to acquire without further consideration $5,100,000 par value of stock.

In *John W. Cooney Co.* v. *Arlington Hotel Co., supra,* the Chancellor said (11 Del. Ch. at p. 308; 101 Atl. at p. 889):

> "Are any of the holders of common stock who have appeared in the proceeding innocent purchasers for value without notice? * * * Almost all the holders of preferred stock had notice that the common stock had not been paid for, because they received voting trust certificates for bonus stock, and bonus stock means stock issued gratuitously and without payment therefor being made or expected.
>
> * * * * *
>
> "Here all who took voting trust certificates were put on inquiry respecting the common

> stock, and were not entitled to rely upon a statement therein that it was full paid. They did not purchase their stock in the market, but were subscribers to stock of a new enterprise and took with their preferred stock some common stock, the *prima facie* evidence being that thereby they knew it was bonus stock, *i. e.*, stock for which no legal equivalent was given. * * * The statement on the certificate of shares of common stock that they were full paid and nonassessable does not relieve from liability to pay therefor any holder or taker thereof, except those without notice of the fact. * * * All who took certificates for common stock were put on inquiry and notice of its character."

If the mere fact that the subscribers for the preferred stock of Arlington Hotel Company knew that they were to receive for every $100 in cash a share of preferred stock having a par value of $100, and a voting trust certificate for a share of common stock having a par value of $100, put them on notice that the shares of common stock had been originally issued without consideration, then certainly Mr. Fleissner, being charged with notice that his predecessor and fellow-members of the syndicate had paid less than 40 cents per share for participation certificates representing shares of the par value of $10 each, was put on notice that such shares, when originally issued, were not fully paid.

The discrepancy between the price payable by the syndicate and the par value of the stock should have been all the more striking, when disclosed to Mr. Fleissner, because in the syndicate agreement itself it appeared that shares of the same issue of stock were being dealt in on the New York Curb at about $8 per share. So the syndicate agreement disclosed that the members of the syndicate had been given an "inside price" and that they had "come in on the ground floor."

In *See* v. *Heppenheimer,* 69 N. J. Eq. 36, Vice-Chancellor Pitney said (at p. 87):

> "I believe that all of the defendants * * * came in, so to speak, 'on the ground floor', and were getting what, in substance, was an original issue of bonds and stock, and therefore do not and cannot occupy the position of a person who comes into the open market and purchases bonds and stock of a company organized for a considerable period of time prior to such purchase, and whose bonds and stock have become matter of daily merchandise."

So here, the members of the syndicate had taken over from the promoters a majority interest in what was practically an original issue of stock, and this fact must have been apparent to Mr. Fleissner when he took part of Mr. Palmer's place in the syndicate.

In *In re Manufacturer's Box & Lumber Co.,* 251 Fed. 957 (cited with approval in *Harrigan* v. *Bergdoll,* 270 U. S. 560), a New Jersey corporation had been in existence about four months, but had not been successful. A man named Beals made a loan to the corporation and as security took its stock from the original holders. He sent his son to examine the books and property. Judge Rellstab said (at p. 961):

> "Beals, in acquiring the stock, was not in the position of one who goes into the open market and purchases stock issued by a company which has been actively engaged in business for a long period, and whose stocks have become marketable merchandise. The protection thrown about such a purchaser cannot be accorded Beals. * * * Under the New Jersey statute, his stock, not having been fully paid, was an asset in favor of the company's creditors. Beals took it in circumstances that called for an ascertainment on his part of the particulars of the transaction resulting in its issue.
>
> * * * Neither stupidity nor heedlessness, any more than a fraudulent motive, will save

> one who is chargeable with making inquiry from the consequence of a knowledge which such an inquiry would have elicited. * * *"

In *Garden City Sand Co.* v. *Crematory Co.,* 205 Ill. 42; 68 N. E. 724, an Illinois corporation had issued $999,800 par value of stock purporting to be full paid, for a patent, and the question was whether the transferees of some of such stock from the promoters were innocent purchasers for value without notice. The Court said (205 Ill. at p. 49; 68 N. E. at p. 726):

> "It is not conceivable that a person of ordinary intelligence and prudence, buying shares of stock in such a corporation, would not become advised as to what property the corporation had. In fact some of the appellees made advances of money to meet expenses and pressing necessities. The directors were * * * endeavoring to provide a small amount of money, *as compared with the capital stock* * * * it would not be creditable to them [*i. e.,* the stockholders] to say that they believed the patent to be worth $999,800."

In *Gillett* v. *Chicago Title & Trust Co.,* 230 Ill. 373; 82 N. E. 891, an Illinois corporation issued $2,000,000 par value of stock for a limited interest in certain unpatented inventions for displaying a panorama at the World's Fair and the limited right to produce a play not yet written, subject to the payment of royalties. The issuees donated $800,000 of the stock for use as bonus on the sale of an equal amount of bonds. In holding the stockholders liable for the debts of the corporation, the Court said (230 Ill. at p. 411; 82 N. E. at p. 905):

> "* * * Appellants insist that, even if this stock was wholly unpaid, they acquired it in good faith without notice of that fact, and are therefore not liable. 'Notice,' in this connection, must be given the ordinary signification of that term, and means knowledge that

> the stock was unpaid, or knowledge of such facts as would have put an ordinarily prudent man upon inquiry, when the inquiry might reasonably be expected to have led him to knowledge that the stock was unpaid. (*Russell* v. *Ranson,* 76 Ill. 167.) Many of the appellants knew precisely how MacKaye had paid for his stock, and all of the appellants acquired their stock, as they knew, within a few months after the organization of this corporation. They obtained it without giving any valuable consideration therefor, except in a few instances where it is claimed that a small percentage of the face value of the stock was paid therefor by services rendered or by other methods, not including cash actually paid at the time of the transfer of the stock. *The fact that the corporation had just been organized, and that its stock was being transferred without, or practically without, any valuable consideration, was, we think, sufficient to put a reasonably prudent man upon injuiry,* and that inquiry would, in our judgment, have led to knowledge of the fact that the stock was wholly unpaid."

Had Mr. Fleissner inquired from the officers of the Company, he would have learned that on September 4, 1915, "property, patents, inventions and good will" in the amount of $9,999,650 had been set up on the books and a like amount charged to "Capital Stock" (R. 336); that those items were carried at precisely the same figure on December 31, 1915, as when originally set up (R. 337, l. 21); that only about $60,000 had been lost by the Company in its operations between the two dates (R. 335, l. 14); and that nothing had occurred between September 4, 1915, and February 10, 1916, which would have accounted for such a depletion of assets that $5,100,000 par value of stock should have been on February 10, 1916, purchasable at a price of not more than $200,000. In a word, he would have learned that the syndicate in obtaining

$5,100,000 par value of stock for the sum of $200,000 had either acquired a stupendous bargain or *that the value of $10 per share behind the stock had never existed.*

So it would have been the duty of Mr. Fleissner to make still further inquiries in order to ascertain whether the value of $10 per share had really been paid in on the 510,000 shares in which he was acquiring an interest. He would have learned that as to 35 shares, of the aggregate par value of $350, an equivalent amount of cash had been received by the Company (R. 60, l. 30); that as to the remaining shares, having an aggregate par value of $9,999,650, the Company had received a miscellaneous assortment of considerations. These items were as follows:

(1) *The Brown air-cooled shoulder machine rifle.*—This was an invention which at the time of acquisition by the Company was unpatented and had not even been made the subject of an application to the Patent Office. Application for letters patent were not filed until August 8, 1916 (Exh. P-14). The invention did not comply with the current requirements of the United States Army for small arms and had no utility for military purposes (R. 235, l. 16 *et seq.*).

(2) *The Beckert organization.*—This consisted of a list of names and addresses of mechanical experts, machinists, etc., which had been collected by Captains Beckert and Angel (former *infantry* [R. 170, l. 40] officers) for use in case the services of such persons were needed. The persons were not under contract to Captain Beckert; he simply knew where to find them (R. 70, l. 18 *et seq.*).

(3) *The benefits of an agreement with Hudson Maxim.*—This agreement (Exh. P-5), as subsequently modified (Exhs. P-9 and 10) prior to the actual issuance of the Company's stock (R. 66, l. 28), provided for the granting to the Company by Mr. Maxim of exclusive licenses under the following inventions:

(*a*) *Improvements in periscopes.*—This invention was covered by Application for United States Letters Patent Serial No. 871,883 (Exh. P-33). The invention was neither useful (R. 222, l. 12) nor patentable (R. 103, l. 37) and the application was subsequently rejected by the Patent Office (R. 372, l. 10 *et seq.*) and abandoned by the inventor (R. 348, l. 20).

(*b*) *Improvements in position indicators.*—This invention was covered by Application for United States Letters Patent Serial No. 877,328, on which Letters Patent No. 1,310,200 (Exh. P-61) subsequently issued to Mr. Maxim under date of July 15, 1919. The invention was unworkable (R. 219, l. 18 *et seq.*) in the only feature in which it had novelty (R. 230, l. 15).

(*c*) *Improvements in range-finding position indicator combined with periscope.*—This invention was covered by Application for United States Letters Patent Serial No. 3,489 of 1915 (Exh. P-34). This invention had no utility (R. 224-227) and the application was subsequently rejected by the Patent Office (R. 389, l. 22) and abandoned by the inventor (R. 375, l. 18).

(*d*) *Improvements in position indicators or recorders.*—This invention was covered by Application for United States Letters Patent

Serial No. 879,466, on which Letters Patent No. 1,310,201 (Exh. P-62) subsequently issued on July 15, 1919. This invention was inoperative (R. 220, l. 30 *et seq.*) and the patent was invalid (R. 230, l. 21).

(*e*) *Combined multi-barreled gun and range finder.*—This invention was covered by United States Letters Patent No. 1,031,279 (Exh. P. 60), which had been granted under date of July 2, 1912. The invention was of no practical utility (R. 211, l. 38); "nothing more than a toy" (R. 237, l. 10).

The agreement with Hudson Maxim also provided for the use of the name of "Maxim" in the name of the Company, and for the granting of exclusive licenses to future inventions of Hudson Maxim relating to war munitions, with the exception of explosives (R. 304, l. 20, *et seq.*).

The agreement also provided that Maxim was to act as consulting engineer for the Company, but was not to be obliged to devote all of his time or reside permanently in America (R. 303, l. 31). The agreement imposed on the Company the obligation to pay Maxim $500 a month from the acceptance of its first order until the Company should have accepted contracts to the extent of $3,000,000 (R. 310, l. 30), and thereafter $25,000 a year for five years, and thereafter $12,500 per year so long as the Company should retain the licenses (R. 305, l. 35). The Company was also obligated in certain events to pay Maxim on its first orders or contracts a certain percentage which might amount to $650,000 (R. 311, l. 10). Maxim was to be permitted to cancel the contract in case the Company accepted no orders within seven months, in which event 93,996

shares of stock of the Company which were deliverable to Maxim were to be returned to Mr. Sweeny (R. 311, l. 36).

(4) *Contract to purchase assembling factory.*—This contract, which when submitted to the board of directors of the Company had already been executed on behalf of the vendor, Fuller Manufacturing Company, and named the Company as the purchaser, provided for the purchase of certain land, buildings, machinery and equipment situated in New Haven, Connecticut, for the price of $250,000 (Exh. P-8). The value of the land and buildings as of September, 1915, was $207,500 (R. 100, l. 22) and of the machinery and equipment less than $30,000 (R. 166, l. 2).

(5) *Advance to the Company of $10,000 in cash.*—This advance was later repaid by the Company (R. 122, l. 14).

The foregoing are the items which Mr. Fleissner, if he had inquired, would have learned had been accepted by the Company in payment for $9,999,650 par value of its capital stock (R. 287-318).

Should he have inferred that these items were not full payment for the stock?

The defendants would have this Court decide, as a matter of law, that no jury could honestly find that a reasonable man obtaining the information above set forth would have believed that the stock was "watered". They say (Brief, p. 37):

> "An investigation by Fleissner, made at the time that he purchased the stock, would not have revealed to him the fact that the property conveyed to the corporation by the promoters was grossly overvalued. All he would have learned was that Hudson Maxim, a well-known figure and inventor in the field of explosives and arms, of high reputation, was connected

> with the company; that a number of inventions and patents relating to explosives and firearms, with imposing names and appealing to the public mind because of the European struggle, had been acquired by the company, together with Maxim's services; that the Board of Directors, after full consideration, had fixed the value of the property so purchased. He had no reason to doubt or question their judgment."

The statements contained in the foregoing quotation from the defendants' brief are not supported by the record. Mr. Hudson Maxim was a well known figure and inventor in the field of explosives, but he had no reputation whatsoever in *the field of arms.* It was his brother, Sir Hiram Maxim (with whom he was not on terms [R. 72, l. 25]), whose reputation was in the field of arms. It is true that if Mr. Fleissner had inquired, as he should have, from one of the promoters with regard to the circumstances surrounding the formation of the Company he would have learned that the real purpose for which the Company was formed was to secure a contract for the assembly and sale of Maxim machine guns. Mr. Fleissner would have learned that the orders which the Company was hoping to secure from the Russian, Greek and Italian governments, as recited in the syndicate agreement (R. 340, l. 38), were for Maxim machine guns. *But none of the inventions acquired by the Company in exchange for its stock had any relation to the Maxim machine gun.* The patents on that gun had expired (R. 72, l. 30). Of course, Mr. Fleissner being a man of ordinary common sense would have inferred that the promoters were pleased to use the name of Maxim (not *Hudson* Maxim) in their corporate title, for undoubtedly that fact would impress the gentlemen with Russian, Greek or Italian sounding names (R. 295, l. 25) from whom machine gun orders were expected (R. 78, l. 38). But the

mere use of the name Maxim (which by the way is a common as well as a proper noun) was not a lawful consideration for the issue of stock, nor was Maxim's promise to act as an officer of the Company.

> "Engaging to render future services cannot * * * be taken as consideration for the issuance of full-paid, non-assessable stock * * * *Nor can S.'s lending of his name to the Corporation be held to constitute a lawful consideration.* * * * Certainly, in the absence of a showing to the contrary better than appears in this case, this court will not indulge the extraordinary presumption that an individual's name is property for the 'lending' of which full-paid stock may be issued under the Constitution of this State. Indeed, I am disposed to think that what S. meant when he testified about 'lending my name' was nothing more than consenting to become connected with the company. If this be true, then it amounts to no more than agreeing to render services in the future as the company's secretary. But this, as before stated, does not constitute a lawful consideration. The more so is this true in this case, because the evidence shows that S. was to be paid a salary to serve as secretary, and was, in point of fact actually so paid. * * *"
>
> *Bowen* v. *Imperial Theatre, Inc.,* 13 Del. Ch. 120, at p. 124; 115 Atl. 918, at p. 920.

The defendants say that Mr. Fleissner would have learned that a number of inventions and patents "relating to explosives and firearms" had been acquired by the Company. The defendants, no doubt inadvertently, have misstated the facts in this regard. Not only did none of the inventions acquired by the Company in exchange for its stock relate to *explosives,* but Hudson Maxim, being under retainer to the DuPont interests in the field

of explosives (R. 72, l. 20), specifically excluded this field from his arrangement with the Company. His contract provided (R. 307, l. 39):

> "The Corporation will not, while the said Maxim is connected with it, either as an officer or consulting engineer, enter into the manufacture of or deal in any of the matters or things mentioned in the exception embodied in Clause 2 of this contract."

The exception embodied in Clause 2 of the contract was (R. 304, l. 15):

> "fuses and explosive compounds and explosive materials, high explosives and gunpowder, ingredients entering into their composition, and all processes and apparatus of every name and nature for their manufacture."

So that Mr. Fleissner, had he made any inquiry as to who Hudson Maxim was and what was his arrangement with the Company, would have learned that the only field in which Mr. Maxim's reputation lay was excluded from that arrangement.

And what were the "firearms with imposing names and appealing to the public mind because of the European struggle" which the defendants say Mr. Fleissner would have learned had been acquired by the Company? One of them was the Brown gun, with which neither of the brothers Maxim had anything to do. The European war had been in existence for over a year when the directors accepted this invention as one of the considerations for the stock, nevertheless an application for a patent had not yet even been filed. The idea on which the gun was built did not comply with the United States Army regulations then in force. Mr. Fleissner could easily have learned that fact. Doubtless any officer of the Infantry or Ordnance Departments of the United States Army would have told

him that, or any employee of a small arms manufacturing company.

The defendants say that Mr. Fleissner was under no duty to engage experts to advise him. We say that he was at any rate under a duty to seek some evidence of that present value which was required by the law to inhere in the items before they could properly be accepted by the directors as consideration for the stock.

In *Volney* v. *Nixon,* 68 N. J. Eq. 605, this Court considered the legality of the issue by a New Jersey corporation of $350,000 par value of stock for patents and a manufacturing plant. The Court said (per Dixon, *J.,* at p. 609).

> "The evidence * * * satisfies us * * * that there was no honest judgment on the part of anybody that the property for which it was intended that the company should issue $350,000 of fully-paid stock was really worth that sum of money. * * * some powder was manufactured, to be tested at Sandy Hook for the United States government, but no test made resulted satisfactorily to the United States officers. Although in the whole venture the parties seem to have expended about $32,000, no income was obtained and no business was established *nor was it demonstrated that the processes of manufacture invented and patented by the complainant had any substantial value.* * * * No one, by the exercise of honest judgment, did or could appraise the property of $350,000."

The only other "firearm" which was included in the consideration for the stock was the multibarrel gun and range finder. The Court's attention is called to this extraordinary contraption, which was referred to by one of the witnesses as "nothing more than a toy" (R. 237, l. 10). The idea is that a number of barrels may be opened or closed like an umbrella in accordance with a sliding peepsight which the gunner is to bring to bear on the target

(See drawings appearing in copy of patent, Exh. P-60). The inventor, however, overlooked the simple fact that the target would occupy different spaces in the peepsight, according to which side of the target was presented, *e. g.,* whether a dirigible was being looked at side to or end on (R. 213, l. 30)! Did Mr. Fleissner need to retain an expert to find out how silly this invention was? Would not his common sense have told him that an ordnance invention on which letters patent had issued in 1912 should have displayed some evidence of value by 1915, more than a year after the war had commenced? Yet the record is devoid of the slightest suggestion that any evidence of value in this invention had appeared by September, 1915.

The fact is that *there was no value in these inventions, and the directors themselves did not believe that there was any.* Mr. Taylor, one of the promoters and directors who accepted these items in payment for the stock, testified as follows:

> "Q. What was it you expected to do? What was the business of the corporation primarily to be? A. We believed from all Mr. Maxim told us that he was going to be able to get *a very large order for machine guns from the Russian Government.* That really was the basis that inspired us to go ahead with the organization" (R. 71, l. 16).
>
> * * * * *
>
> "Q. Now, were the inventions mentioned in Schedule A attached to Mr. Maxim's letter, Exhibit P-5, discussed at the directors' meeting? A. No.
>
> Q. Did you ever hear of any successful invention of Hudson Maxim at that time? A. Nothing except his powder" (R. 72, l. 9).
>
> * * * * *
>
> "Q. Now, Mr. Taylor * * * was there any full and lengthy consideration and discussion among the members? A. No.
>
> Q. Was there any discussion either at that meeting or before the meeting as to the nature

or value of any of the inventions referred to in Mr. Sweeny's letter? * * * A. No.

Q. Was any appraisal submitted at or before the meeting of the value of any such invention? A. No. * * *

Q. Was there any discussion as to the invention of the Brown gun? * * * A. No.

Q. Were the inventions of Mr. Maxim referred to in his letter, Exhibit P-5, disclosed or discussed at the directors' meeting at all, or before the adoption of the resolutions? A. No.

Q. Did those inventions play any important part in the plans of yourself and your co-organizers of the company, for the company? A. No.

Q. Did the Board of Directors actually decide that $9,999,650 was the fair value of the property offered by Sweeney? A. No.

Q. Did any of the directors present at that meeting express any belief that such a sum was the cash or market value of those items, on that day? A. No.

Q. How did you fix upon the million dollars as the capitalization of the company? A. Well, the idea was that with the very large business which we were going to get through Mr. Maxim —that is, particularly for the rapid-fire guns— that that would be a fair valuation of the profits upon which we would be able to earn dividends. That was the thought.

Q. What rapid-fire gun do you refer to? A. The Maxim rapid-fire gun.

Q. Invented by which Maxim? A. Sir Hiram.

By the Court:

Q. Is that the gun that has been produced here and is marked Exhibit P-15? A. No, that is the Brown air-cooled shoulder rifle" (R. 76-79).

* * * * *

"Q. Now, you were asked about your knowledge of Hudson Maxim and his ability in various lines. Along what lines did you know that Hudson Maxim had made any inventions? A. Well, it was generally known that he had invented smokeless powder. He had a big

name in the explosive field. That is all I knew.

Q. Did you know anything about his inventions or his reputation as an inventor in any field other than the explosive field? A. That is all that I ever heard.

Q. In fixing the value of nine hundred and some odd thousand dollars for these various things that the company got and which you issued stock for, as far as your conclusion was concerned, how did you arrive at such a large figure? A. Based on the possibilities. I believed we were going to make a lot of money, and that we could develop that stock into real money.

Q. And so far as you know what was the attitude of the other directors at the time? A. I can't speak for them, but I imagine that that would be my impression. We had great faith in the future of the company.

Q. *Did you at any time think that the various properties that the corporation received, singly or altogether, had then a cash or market value of $10,000,000 or anything like that sum?* A. No, sir" (R. 140, l. 22).

There is no reason to suppose that any of the persons who participated in the original issue of the stock would have concealed from Mr. Fleissner, had he inquired, what was the real basis of the formation of the Company and the issue of its stock. We do not charge that the promoters acted dishonestly or with a corrupt motive.

They doubtless believed or were advised that it was proper for them to issue $10,000,000 of stock purporting to be full-paid and non-assessable, when really based on their optimism as to the profits which would accrue from their connection with Mr. Maxim, and the possibility that some foreign government would give them an order for machine guns. Had Mr. Fleissner inquired, as he should have, and learned these facts, he would have known that the stock was not fully paid.

The defendants say (Brief, p. 38) that the testimony of experts fourteen years later, "in the light of the facts developed since that time and the progress made in that field of endeavor", does not show what Mr. Fleissner would have discovered had he made an investigation at the time he acquired the stock. Again the defendants, doubtless inadvertently, misstate the record. There is no evidence that any of the criticisms made by the witness as to these inventions was based on facts developed since 1915 or on progress made in any field of endeavor since that time. The objections to the submarine periscopes which were brought out so vividly in the testimony of Commander Cresap would have been as obvious in 1915 as they were in 1929, and the same is true of the position recorders (R. 215-229). If there was the slightest evidence that these inventions in 1915 had given any indication of value, so that a reasonable man inquiring into the circumstances under which the stock was issued would have had any basis for believing that the directors had made a real valuation of the inventions, why did not the defendants produce such evidence at the trial of this action? If, as the defendants say (Brief, p. 37) "even among experts there would have been a wide variety of opinion" as to the value of these inventions, why did not the defendants produce at the trial a single expert who would have given an opinion under oath that any of these inventions had at any time any value whatsoever?

But let us suppose that the inventions as to submarine periscopes had been operative and patentable, the patents as to the position recorders had been valid and practicable and the instruments had been built and sold,—how could any reasonable man have believed that the enormous sum of almost $10,000,000 fairly represented the value of such inventions in September, 1915? Nautical position in-

dicators and optical instruments for use in submarines are not like razor blades or toothpaste; the demand for such articles even in time of war must be extremely limited. Even had the inventions represented a world monopoly of submarine periscopes and position indicators, they could not conceivably have been worth more than a small fraction of the total valuation fixed by the directors.

As to the other items received by the Company in exchange for its stock, any discussion is needless. The "Beckert organization", being nothing more than a card catalogue of personnel for future employment, was not a proper basis for the issue of stock. The proposed contract for the purchase of land, buildings and equipment could have been worth only the difference between the price to be paid and the real value of the property (*Bryson* v. *Conlen,* not officially reported, 7 N. J. Adv. Rep. 273, 277). The advance of $10,000 on open account was, of course, not a proper consideration for stock.

The defendants say (Brief, p. 37) that Mr. Fleissner, had he investigated, would have had no reason to doubt or question the judgment of the directors. But

> "No pretended exercise of business judgment by the directors * * * could give any value to that which in fact was not property."
>
> *Scully* v. *Automobile Finance Co.,* 11 Del. Ch. 355, at p. 358; 101 Atl. 908, at p. 909.

Mr. Fleissner was not entitled to rely on the statement in the minutes at all, for a mere examination of the minute book would have warned him that in placing a valuation of $9,999,650 on the items there referred to, the directors were not fixing a price which, if they had had the cash in the bank, they would have been willing to pay in cash. That is the test which Mr. Fleissner should have

applied to their act (*Holcombe* v. *Trenton White City Co.*, 80 N. J. Eq. 122, 159; affd. 82 *id.* 364). A mere reading of the minute book must have disclosed to Mr. Fleissner that most of the so-called properties which the Company had were liabilities. In fact, within less than a year after the original transaction the Company was pleased to relieve itself of its obligations to Mr. Maxim by paying him approximately $9,000 and releasing to him all rights under his contract (R. 162, l. 25 *et seq.*).

The termination of the arrangement between Hudson Maxim and the Company took place in August, 1916, four months prior to the acquisition by Mr. Fleissner of the 6,375 shares here in question (R. 163, l. 29). Had Mr. Fleissner in December, 1916 made the investigation which we say he was under a duty to make, or even if he had merely inquired as to the connection of Mr. Maxim with the Company in the corporate title of which the name "Maxim" appeared—surely an inquiry which the most careless investor would have made—he would have learned that Mr. Maxim was no longer connected with the Company and that the license rights and other benefits of the arrangement with Mr. Maxim, which (together with the Brown gun, Beckert organization, Fuller purchase contract and $10,000 advance) had been valued at $9,999,650 in September, 1915, had turned out to be of so little real value that in August, 1916 the Company was willing to give them back to Mr. Maxim and pay him cash to boot, in consideration for being itself released from its liabilities under the arrangement and receiving from Mr. Maxim about 22,000 shares of its own stock (R. 423). The disclosure of that fact alone to Mr. Fleissner should have been sufficient to convince him that the items mentioned in the minute book as supporting the original issue of stock were, in the words of Vice-

New Jersey State Library

Chancellor Walker, paraphrasing the remarks of Chancellor Pitney in *Bigelow* v. *Old Dominion Copper Co.*, 74 N. J. Eq. 457, at p. 501, *"as evanescent as water and as inconstant as the wind"* (*Holcombe v. Trenton White City Co., supra,* 80 N. J. Eq. at p. 159).

It is unnecessary to contend that Mr. Fleissner was under a duty to employ experts in order to appraise the inventions. We do contend that he should have made some inquiry into the circumstances under which the stock had been originally issued, and that had he made such inquiry he would have discovered that those circumstances amounted to "actual fraud" as that term has been construed by the courts of Delaware and of this state in connection with the issue of stock, *i. e.,* any "device by which the stock of the corporation passes to a stockholder without payment in full" (*Easton Nat. Bank* v. *Amer. Brick & Tile Co.,* 69 N. J. Eq. 326; aff'd. 70 *id.* 722). He would have learned that the judgment of the directors as to the value of the property had been reached "without due examination into the elements of value", had been "based upon matters which really are not property", and had been "plainly warped by self-interest" (*Donald* v. *American Smelting & Refining Co.,* 62 N. J. Eq. 729; *Holcombe* v. *Trenton White City Co., supra*). He would have discovered that of the directors who acted at the meeting of September 4, 1915 Mr. Porter was a mere dummy, acting for that single meeting (R. 286, l. 28; 331, l. 21), and each of the others had an arrangement with Mr. Sweeny whereby he was to receive and later did receive allotments of the very stock on the issue of which they were voting (R. 324; 71 l. 28; 79, ll. 17, 25; 83, l. 40). He would have learned that the real basis of their action was the capitalization of expected profits, a basis which was not permissible under the law

(*Wallace* v. *Weinstein*, 257 Fed. 625; *See* v. *Heppenheimer, supra; Bryson* v. *Conlen, supra*).

The Trial Judge committed no error, therefore, in permitting the case to go to the jury on the question whether Mr. Fleissner had notice of the issue of the stock for property at a valuation greatly in excess of its true value, or of facts which would have put a reasonable man upon inquiry.

> "* * * it is well settled, that whatever puts a party upon inquiry, amounts in judgment of law to notice, provided the inquiry became a duty and would lead to the knowledge of the requisite facts, by the exercise of ordinary diligence and understanding".
>
> *Todd* v. *Exeter Land Co.*, not officially reported, 7 N. J. Adv. R. 702, at p. 705.

POINT V.

The Trial Court did not err in the admission of evidence (1) as to the original issue of the stock, (2) as to the bankruptcy proceedings.

The grounds of appeal present two general classes of evidence which the defendants believe to have been erroneously admitted: first, evidence relating to the original issue of stock and the consideration received therefor, and second, proceedings of the bankruptcy court.

(1) *The evidence as to the original issue of stock and the value of the consideration received therefor was correctly admitted.*

All of these facts were relevant to the question of whether Mr. Fleissner was or was not an inno-

cent purchaser for value. The evidence disclosed the facts which Mr. Fleissner would have learned if he had made a reasonable investigation. It would, therefore, have been impossible for the jury to decide the issue of fact which was left to it unless it had before it the circumstances which a reasonable investigation on the part of Mr. Fleissner would have disclosed.

It is also to be noted that the defendants by their Tenth Separate Defense had raised the issue as to whether there was "actual fraud" in the original transaction (R. 27). By so pleading the defendants gave notice that they would deny the conclusive effect of the decree of the bankruptcy court on the question of whether the stock was fully paid. The plaintiff, accordingly, was justified in assuming the burden of proving that the stock was not fully paid.

(2) *The proceedings of the bankruptcy court were properly admitted in evidence.*

The defendants in this Court take the position that the petition for assessment and answers were irrelevant and immaterial (Brief, p. 60). But this was not the ground on which the proof was objected to in the Court below (R. 194, l. 28; 195, l. 23).

No question of jurisdiction or public policy being involved, the ground of objection here urged for the first time will not be considered (*Purek* v. *Botany Worsted Mills,* not officially reported, 7 N. J. Adv. R. 1074).

But, in any event, the petition and answers, being part of the formal record upon which the assessment decree was entered and showing the issues which were adjudicated by that decree, were admissible (2 *Freeman on Judgments,* 5th ed., § 1030). Nor was such evidence prejudicial. No facts bear-

ing on the liability of Mr. Fleissner were alleged in the bankruptcy proceedings which were not supported by the proof actually submitted to this jury.

The admission of neither class of evidence, therefore, was error.

CONCLUSION.

The judgment of the Court below should be affirmed with costs.

May Term, 1930.

Respectfully submitted,

GEORGE W. C. MCCARTER,
RALPH MONTGOMERY ARKUSH
(of the New York bar),
Counsel for Plaintiff-Respondent.